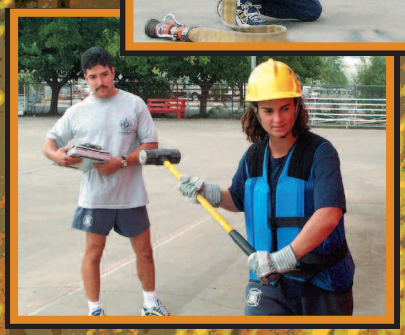

WFI

Candidate Physical Ability Test

SECOND EDITION

The Fire Service Joint Labor Management Wellness-Fitness Initiative Candidate Physical Ability Test

2nd Edition

Table of Contents

PREFACE

CHAPTER 1 Recruiting a Diverse Candidate Pool
CHAPTER 2 Mentoring and Preparing Physically Qualified Candidates
CHAPTER 3 CPAT Transportability and Licensing
CHAPTER 4 Preparation, Orientation & Practice Sessions
CHAPTER 5 CPAT Events
CHAPTER 6 CPAT Administration
CHAPTER 7 Data Collection

Appendix A CPAT Orientation & Practice Session Guide
Appendix B CPAT Candidate Preparation Guide
Appendix C CPAT Forms
Appendix D CPAT Tool, Prop and Equipment List
Appendix E CPAT Transportability Form & Comparative results
Appendix F IAFF and EEOC Conciliation Agreement

Copyright © 1999, 2007 by the International Association of Fire Fighters. All materials produced throughout the development of the Fire Service Joint Labor Management Wellness-Fitness Initiative are the proprietary right of the IAFF, the IAFC and the ten cities and local unions of the Task Force. This publication is protected by copyright. No part of it may be reproduced, stored in a retrieval system, or transmitted in any form or by any means, electronic, mechanical, photocopying, recording, or otherwise without written permission from the International Association of Fire Fighters.

International Standard Book Number: 0-942920-41-4

PREFACE

HISTORICAL BACKGROUND

When the IAFF/IAFC Joint Labor Management Wellness-Fitness Initiative Task Force (WFI Task Force) first met in December 1996, the WFI Task Force agreed, in part, to address the issue of physical performance in the fire service. The resulting Candidate Physical Ability Test Program (CPAT) was developed to provide fire departments with a tool that would enable them to select inherently physically capable individuals to be trained as fire fighters.

INCUMBENT EVALUATIONS

The mission of the WFI Task Force is to enhance the medical, fitness, and behavioral health; medical and fitness rehabilitation; and wellness-fitness data collection of the fire service. The WFI Task Force has maintained that incumbent performance testing is inappropriate for implementation within WFI Task Force department's and the fire service as a whole. However, before any fire department makes a local decision to implement incumbent testing it must have an adequate support system in place to keep uniformed personnel capable of safely performing fire operation tasks during their entire career. The members of the WFI Task Force have concluded that before an incumbent physical ability test is developed and implemented the fire department must:

- Establish a policy that all incumbent evaluations be non-punitive;

Fully implement **all** components of the Wellness-Fitness Initiative (WFI). The full initiative shall be in place for a minimum of 24 months. The requisite components include:

- Medical fitness,
- Physical fitness,
- Rehabilitation,
- Behavioral health, and
- Data management.

Fully implement **all** components of the CPAT program. The requisite components include:

- Minority Recruitment,
- Mentoring,
- Pre-test orientation, training and education,
- Transportability study,
- Administration (proctor training, evaluation and data collection), and
- CPAT test
- Incorporate the WFI into company level training;
- Provide medical clearance;
- Establish a rehabilitation program for training, fitness, and medical rehabilitation;
- Provide for revaluation and return to duty or extended light duty or alternative duty of fire fighters during rehabilitation; and
- Establish an internal quality assurance program to review fire department programs (operations, training, fitness and/or wellness) that may de deficient.

Furthermore, the WFI Task Force reiterates its position that the failure of an incumbent fire fighter demonstrates the fire department's (including labor, management and the individual) inability to prepare and/or maintain uniformed personnel's training skill and conditioning to perform job-specific functions required for fire department operations.

The WFI Task Force will evaluate pilot projects of incumbent evaluation in fire departments that are members of the Task Force. These fire departments doing this evaluation have met the above conditions and will share their results and data with the WFI Task Force for future considerations.

It is a violation of the CPAT license and the CPAT copyright to use the CPAT test for any incumbent testing.

TECHNICAL COMMITTEE

The WFI Task Force retains a technical committee comprised of the IAFF, the IAFC and subject matter experts from each of the ten jurisdictions. The technical committee members include labor officials, fire fighters, line officers, training officers, physicians, kinesiologists, attorneys, and exercise physiologists. Women and racial minorities were represented among these members. The committee was further advised by expert consultants in the fields of labor and employment law, industrial psychology, and psychometrics. The technical committee was instructed to develop a test that would measure a candidate's physical ability to perform the critical tasks of a fire fighter.

WHAT DOES THE CANDIDATE PHYSICAL ABILITY TESTING PROGRAM INCLUDE?

The WFI Task Force's goal was to develop a fair evaluation system in the selection of fire fighters to ensure that all fire fighter candidates possess the physical ability to complete critical tasks effectively and safely. WFI's CPAT project has seven major components.

- Recruiting a Diverse Candidate Pool
- Mentoring and Preparing Physically Qualified Candidates
- Validating CPAT for Your Department
- Orientation & Practice Sessions
- CPAT Description
- Test Administration
- Data Collection

This CPAT was developed to allow a fire department to fairly obtain a diverse pool of candidates who are physically capable of performing the tasks required in recruit school.

This 2nd edition reflects the experiences of U.S. and Canadian fire departments in implementing the comprehensive CPAT program.

In 2006, the following orientation and pre-test procedures were implemented after a conciliation agreement with the US Equal Employment Opportunity Commission (EEOC):

All candidates will attend at least two mandatory orientation sessions commencing within eight weeks before the actual official CPAT test date, during which they will receive "hands on" familiarity with the actual CPAT apparatus. Candidates may voluntarily attend up to one additional orientation session.

Within 30 days prior to the actual CPAT test date, all candidates will perform at least 2 timed practice runs, using actual CPAT apparatus, and in which the candidate is allowed to take as much time as necessary to complete the entire course.

A candidate may waive all of the fore-mentioned program components and be eligible to participate in a CPAT test. Such a waiver shall only be acceptable if it is in writing, and is made on a wholly knowing and voluntary basis.

During the orientations and practice runs certified Peer Fitness Trainers, fitness professionals and/or CPAT trained fire fighters (proctors) will be present to help all candidates understand the test elements and how they can improve their physical performance and conditioning prior to taking the test.

A complete copy of this conciliation agreement may be found in Appendix F.

Further, the WFI Task Force now requires that all those that are licensed to use the CPAT must fully implement these orientation and pre-test procedures. For those fire departments that are utilizing another Licensee to conduct their CPAT, the fire department, as the employer, must ensure that these changes are incorporated

Through the CPAT licensing agreement, all licensees have agreed to provide the IAFF with data on candidate CPAT performance. To facilitate the collection of such data, the IAFF has developed and has now provided to each licensee a secure web-based data collection and reporting system for CPAT entitled the *CPAT Administrator*. As a condition of continued licensure, all licensees shall now use this program and report to the IAFF database on an annual basis. This information will be provided in a redacted format, which will keep the employer identity confidential, to the US EEOC.

It is the hope of the WFI Task Force that this manual clarifies any issues included in the first edition and improves upon this already very successful program. ■

CHAPTER 1
RECRUITING A DIVERSE CANDIDATE POOL

WHY IS HAVING A DIVERSE FIRE DEPARTMENT IMPORTANT?

In today's society, communities are increasingly diverse and fire fighters are continually challenged to operate in multicultural environments. The fire department should reflect the community it serves. The goal of the CPAT is to test for those who are physically prepared to be trained to perform the job of fire fighter. The CPAT cannot be separated from the department's broader goal of attaining a properly trained and physically capable workforce whose members reflect the diversity of the community. Diversity should never come by lowering validated entry standards. Rather, it should come from actively recruiting qualified men and women candidates from all racial and ethnic backgrounds for careers in the fire service.

The required job skills of the modern fire fighter are complex. In one shift, today's fire fighters may extinguish working fires, mitigate a hazardous materials incident, provide emergency medical care to an adolescent victim, and support the grieving spouse of a dying patient. In addition, fire fighters must interact frequently with community members during routine pre-fire inspections, community events, and school presentations. In order to accomplish these tasks successfully, it is necessary to have a well rounded, competent workforce made up of both genders to include all races and ethnic backgrounds.

In the past, many departments have incorrectly assumed that all types of people would be attracted to the fire service because of the nature of the job and its many benefits. These false assumptions have resulted in a workforce that is less than diverse, and in some cases have led to lawsuits, court orders, and consent decrees. This cycle of judicial order and reactive action takes control of the recruitment and hiring process out of the fire department's hands.

Proactively recruiting protected groups year-round is the best method of attracting qualified and diverse applicants. This approach reflects the fact that many protected groups have not had adequate exposure to the requirements and rewards of the job of a fire fighter. The goal of targeted recruiting is to select and retain the most qualified applicants while obtaining a diverse workforce. Successful recruiting ensures that a fire department will have a large pool of applicants to include a racial and ethnically-mixed group of men and women.

SUGGESTED WAYS TO RECRUIT

There is no one way to target qualified, diverse fire fighter applicants.[1] Fire department officials should remember that successful recruiting is not limited to the period of time before the examination is administered. They must also recognize that fire fighters "self-recruit," by attracting others who are like them in race, ethnicity, or gender. Fire departments should target recruiting towards underrepresented groups reflected within their community. This will help to broaden the applicant pool. Such recruiting encourages those who might not otherwise apply because they were either unaware of the opportunity or not familiar with the outstanding career that fire fighting provides. There are many recruitment strategies that can be used by fire departments to develop and expand their recruitment efforts.

INTERNAL ACTIONS

A productive recruitment drive is just part of what it takes to increase diversity in the fire department. For recruitment to be effective, managers must establish a positive climate within the department before encouraging members of a diverse community to become fire fighters. Fire departments must also begin to recognize, and take advantage of, the recruitment impact of most of their public activities. Expanding the concept of recruitment will make the recruitment drive itself more successful and will increase the likelihood that minorities who are recruited will actually become fire fighters.

The skills and dedication of the people working in the recruitment unit, the creativity that goes into designing the program and the verbal, logistical and financial backing given to the effort by top management, all play important parts in the success of your department's recruitment effort. All of this effort and investment must be supported. If other aspects of the department give out a conflicting message, or if the department is unprepared for a workforce that includes minorities, much of the recruitment effort will have been wasted.

Assess the department climate with respect to change in the workforce. Review department policies and facilities, and make changes where appropriate. Are the policies suitable for all? If a problem does occur, do employees know how to use the system to correct it, and do they trust the system to be fair, speedy and confidential? Are fire stations suitable for the workforce that includes all individuals who will be assigned there? Are training instructors chosen for their competence and knowledgeable about alternative techniques for physical tasks, and generally pos-

itive about training? Provide meaningful diversity training for all levels of the department, beginning with its top management. Provide training for all department members in communications skills and conflict resolution. These seemingly irrelevant skills contribute significantly to workforce harmony. Therefore it is strongly recommended that organizations implement programs such as mentoring and peer mediation.

COMMUNITY OUTREACH

Any event where members of the community assemble is an opportunity for the fire department to recruit new applicants and to inform the public about its commitment to hiring a qualified workforce that reflects the diversity of the community. Events may include state fairs, county fairs, health fairs, races and other athletic events, churches, community colleges, barber shops, beauty salons, local social events and fund drives. In addition, an ongoing awareness program of public speaking, educational, and other opportunities to include women and minority fire fighters in community outreach will reinforce recruitment efforts made prior to the examination.

In many communities, the firehouse remains an icon of the neighborhood. Parents bring their children to the firehouse to meet the men and women who protect them, and groups, such as the scouts and school children, come to learn about the job. An open house not only provides a unique opportunity for the fire department to showcase its diversity, but also serves as an opportunity to recruit members from the community it serves and whose population the fire department seeks to reflect.

COMMUNITY ORGANIZATIONS AND PARTNERSHIPS

Individuals involved in the recruitment program may come from various areas. This may include fire fighters, non-suppression personnel and support staff from other fire departments or governmental agencies. One may consider community volunteers with human resource abilities or qualified uniformed personnel if your department has few or no members that represent a diverse community.

Minority and women's organizations as well as organizations successful in their recruitment efforts are valuable sources of ideas and resources for recruiting, and can be used throughout the year to spread the word about the fire department's search for a qualified, diverse applicant pool. These groups may also be willing to assist with applicant training. Fire departments should identify helpful organizations, make contact with key individuals within these groups, and establish an ongoing dialogue about ways to diversify the fire department. These groups should be given pre-examination recruitment materials and asked to provide specific assistance and resources for pre-examination recruitment. Some of the following groups may be helpful.

Local ethnic, minority, and women's advocacy and employment groups

Local or regional offices of national organizations such as the National Association for the Advancement of Colored People (NAACP), the Urban League, National Organization of Women (NOW), and Wider Opportunities for Women (WOW)

Whatever the size of a department, utilization of all resources will maximize recruiting efforts. A recruitment program is very similar to a public education program. Modeling recruitment efforts after a public education curriculum may prove valuable. These types of efforts target audiences and present messages in a way the audience will understand and respond. Similar to the public information officer, the recruiter should possess skills that can be useful in designing and distributing press releases and obtaining media coverage for recruitment events.

The use of community volunteers to distribute literature and network with various community groups provides another means mechanism of recruitment. This fosters relationships within the community and may help to carry the message of recruitment. As an example, small departments with limited budgets may also be able to find people who will donate their professional skills to design brochures, print flyers or make public service announcements. Local businesses may donate all or part of the cost for printing literature and posters for a recruitment drive. Local educational facilities may allow students to work on the development, the production or the editing of a project for school credit. Cable television companies may provide video equipment, editing facilities and a wide viewing audience. Fitness centers and gyms may be willing to offer discount memberships to fire fighter applicants preparing for the recruitment process.

THE INTERNET

The Internet is a valuable resource for learning about local organizations committed to improving job opportunities for females and minorities. Fire department officials may also wish to work with minority and women's groups within the department to help with recruitment efforts. A fire department's web site can provide information about the requirements to become an entry-level fire fighter and the department's commitment to a diverse workforce.

MEDIA

The media can also provide a significant ongoing opportunity through which the fire department can educate the public regarding the rewards and requirements of being a fire fighter and the fire department's commitment to diversity. Fire departments should make use of radio and television, as well as newspapers and magazines with significant female or minority audiences. Fire departments can:

- Issue press releases announcing upcoming examinations, as well as the promotion of women and minorities within the department.
- Seek press coverage of fire fighters and recruits, including feature stories on females and minorities who are progressing through the academy and who are serving as fire fighters.
- Develop advertisements that feature women and minorities performing the duties of fire fighters.
- Make use of free public service announcements, cable access programs and other low or no cost opportunities to promote diversity

BROCHURES AND PUBLIC ANNOUNCEMENTS

Fire departments should ensure that posters, brochures, and other recruitment information illustrating the diversity of the fire department are visible and available to female and minorities. Fire departments should consider distribution of recruitment materials to:

- Minority neighborhoods, churches and other community gathering places.
- Gyms and health clubs with predominantly minority or female memberships
- Social service organizations
- Businesses frequented by minorities and females
- Women's athletic clubs, teams and events
- Military personnel — active or recently discharged

COLLEGES AND HIGH SCHOOLS

Fire departments should develop and maintain contacts with middle schools counselors and high school and college career placement officers in their community, advising their commitment to a fire department that reflects the community. Some colleges offer classes toward a degree in fire science; others may be willing to assist with pre-examination training. College athletic departments (including state, private and community colleges, universities, and junior colleges) have consistently provided many physically capable minority applicants. These applicants are often self-motivated, physically fit, and open to physical challenges.

Many colleges and high schools have career days where students can learn about future employment opportunities. These forums provide the fire department with a great opportunity to introduce the fire service as a career, especially for women and minorities who might not have considered fire fighting as a job possibility available to them.

APPLICATION AVAILABILITY

Fire departments should ensure that applications for entry-level fire fighter positions are available in a number of locations throughout the area served by the fire department, particularly in areas with a high minority population and businesses and organizations frequented by minorities and females.

SUMMARY

It is the position of the IAFF/IAFC Joint Labor Management Wellness-Fitness Initiative Task Force that fire departments should increase the diversity of their workforce by actively recruiting candidates from throughout their communities rather than lowering candidate physical ability standards. As described in this chapter, fire departments can pursue many avenues to raise awareness of the job opportunities within the fire service before testing is administered.

[1] The Changing Face of the Fire Service: A Handbook on Women in Firefighting, published by the U.S. Fire Administration (January 1993). ■

CHAPTER 2
MENTORING AND PREPARING PHYSICALLY QUALIFIED CANDIDATES

A mentor is a positive role model with whom applicants can identify. Mentors demonstrate that men and women from any race, religion or ethnic group can perform the job of a fire fighter. A mentor can introduce the fire service as a noble profession and display the pride that being a fire fighter bestows.

Mentors can be utilized in many aspects of recruiting, including participating in recruiting sessions at colleges, high schools, community events, and open houses. In addition, mentors have been used by participating departments in the following ways:

- Support of cadet or explorer programs where future applicants (15 to 21 years old) participate in fire department activities to learn about the job
- Participation in bringing one's child to work events
- Teaching fire fighter fitness and conditioning courses at community colleges
- Sponsoring and supporting athletic events for fire fighters at public venues

MENTOR

A mentor is defined as a trusted counselor or teacher, especially in the occupational setting. The goal of a mentor is not merely to get a candidate to pass the CPAT, but to prepare the candidate to be a successful member of the fire and rescue team.

It is also beneficial to maintain a diverse group of mentors. Candidates need to identify with a mentor to achieve maximal success in the program. Having a diverse group increases the chances of achieving that goal.

PHYSICAL TRAINING

The physical training component of a CPAT mentoring program is a key piece of the overall mentoring program. A fire department's CPAT license mandates that eligible candidates have a minimum of eight weeks to familiarize themselves with the CPAT events and physically prepare for the test. The CPAT presents a multitude of physical demands and it is up to the mentor to adequately prepare candidates for all of these demands. A highly successful mentoring program will include elements of strength training, cardiovascular training, CPAT event-specificity training and flexibility training. It is also important to remember that candidates will enter the mentoring program at varying physical levels. Therefore, training programs must adapt to the baseline ability level of each individual.

STRENGTH / CORE TRAINING

Strength training can encompass various types of resistance training — dumbbells, resistance machines, resistance bands, body weight training, etc. No matter which type of training is used the program should also include core training. Maximizing the strength of the core will significantly increase the force production capability and the neuromuscular efficiency of the extremities, thus improving overall strength.

It is important to note the principle of specificity of training. The more alike the training regimen is to the task being tested, the better the overlap to that task. Therefore it is important to have training on the actual CPAT tasks including running the course in its entirety.

CARDIOVASCULAR TRAINING

All aspects of the CPAT challenge a candidate's cardiovascular abilities. A mentoring program would be incomplete without some type of cardiovascular training. Initially basic, timed cardiovascular activities are sufficient to build a cardiovascular base. To improve aerobic ability it is important to progress to higher intensity activities. An example would be interval training which requires the candidate to train for a short period at near maximal aerobic capacity followed by a period of sub-maximal activity.

FLEXIBILITY / RANGE OF MOTION

Initially, mentoring sessions should BEGIN with slow, dynamic stretching to warm up muscles and prepare connective tissues for activity. The sessions should END with static stretches to elongate contracted muscle fibers.

TOTAL INTEGRATION

The physical component of a CPAT mentoring program is the most visible sign to the fire service candidate, however, it is equally important to impart the values that make the fire service great. Mental strength and confidence imparted upon a candidate from a mentor can give the candidate the internal drive necessary to help him or her begin a successful career in the fire service.

ADMINISTRATION

The depth of a fire department's commitment to successful CPAT mentoring is reflected in the amount of time and resources allotted to their mentoring program. These efforts can come from within the department or if internal resources are not available outside sources can be used. The ***minimum*** requirements for a CPAT mentoring program are to make Peer Fitness trainers or active fire fighters available to candidates at their two orientation sessions and allow for two trial runs at the CPAT prior to the official test date. However, many departments have shown the efficacy of more in-depth mentoring programs that include the opportunity to meet with a peer fitness trainer up to four times per week for a period of up to 16 weeks. ■

CHAPTER 3
CPAT TRANSPORTABILITY AND LICENSING

In order for your department to utilize the CPAT you must comply with the Uniform Guidelines on Employee Selection Procedures (1978). When the IAFF, IAFC and the ten departments and their local union affiliates of the Joint Labor Management Wellness-Fitness Task Force decided to embark on the development of a physical ability test for fire service candidates, we were required to comply with these guidelines. Any fire department utilizing CPAT must validate that the CPAT is a suitable test for your jurisdiction.

The specific section in the Code of Federal Regulations (CFR) that applies to validating a test for one organization that was developed by another organization is found in 29 CFR 1607.7. This section of the Guidelines requires these organizations to provide evidence in three specific areas.

First, an employer must provide evidence that the selection procedure is valid.

Second, an employer must provide evidence of job similarity with the job on which the validity study was performed.

Third, an employer must provide evidence of test fairness. It is for this reason that departments are required to submit their CPAT results to the national database at the IAFF using the *CPAT Administrator*, the required CPAT data collection software.

TRANSPORTABILITY STUDY

Transportability studies are a routine part of the selection criteria adoption process. Most tests are developed with the assistance of a limited number of participants and then applied to additional participants after the initial development phase has been completed. In general, the goal of the transportability study is to demonstrate that the major work behaviors required of the participants in the initial test development are sufficiently similar to the major work behaviors required by other users of the selection criteria.

The steps to conduct an effective transportability study include:

- Selection of a transportability study leader
- Analysis of essential job duties required by the department
- Completion and analysis of the physicality and criticality surveys found in Appendix C
- Completion and analysis of the equipment survey found in Appendix C
- From this analysis, creation of a written job description
- Apply for licensure from the IAFF

Listed below are descriptions of each of these steps.

SELECTION OF A TRANSPORTABILITY STUDY LEADER

One person from within your department should be responsible for coordinating the implementation of the CPAT for your fire department. The individual designated as the leader of the transportability study should be someone who is familiar with CPAT protocols and has good administrative and communication skills.

The leader of the transportability study is responsible for ensuring all parts of the transportability study remain in their possession and the transportability study is administered exactly as the instructions are written. Securing the data is essential to ensuring the study is valid and accurately reflects the opinions and practices of the department's personnel.

JOB ANALYSIS

Performing the job analysis is the basis for the transportability study. In order to accurately perform the job analysis you will have to perform several steps including, determining the number of required survey participants, selecting survey participants, determining where and how you will administer the surveys, administering the surveys, and having the data evaluated by a testing professional from either within your department or an outside consultant.

DETERMINING THE NUMBER OF SURVEY PARTICIPANTS

Surveying an adequate number of fire fighters in your department is critical to the validity of the results. Similarly, adequately representing the diversity of your department is essential for acquiring a representative sample. The following procedure must be followed to assure a diverse group of individuals have completed the survey:

The number of personnel required to complete the survey is dependent on your department's size. The results are strengthened if more personnel complete the survey. Larger fire departments will be able to survey a percentage of their personnel while smaller fire departments may be required to survey all their personnel. The quantity of surveys completed ensures the results adequately represent the opinions of fire department personnel regarding the criticality and physicality of the survey's 31 fire fighting tasks.

SELECTION OF SURVEY PARTICIPANTS

Members of your department who complete the criticality and physicality ratings of the 31 fire fighting tasks should be selected using a stratified sampling. The selection of these survey participants must follow these steps:

- Individuals selected to complete the survey must represent personnel from all areas within your department's operational rank structure. Probationary fire fighters and fire fighters serving in administrative positions should not complete the survey due to their lack of experience or current exposure to fire fighting tasks.

- Personnel randomly selected to complete the survey must represent a diverse group of department members. Survey participants must include personnel from different ranks, ages, gender, and ethnic/minority groups. The survey participants ultimately selected must include a representative sampling from each of these groups although it is acceptable to have more participants from the lower ranks. Failure to include a diverse department sample may jeopardize the validity of the survey results. A testing professional should be contacted if you experience difficulty regarding your ability to achieve the diversified sample.

DISTRIBUTION OF SURVEYS

The transportability study leader is responsible for administering the criticality and physicality surveys to department personnel. To alleviate having to read the instructions multiple times, large groups should be assembled if possible. Similarly, to assure consistency in the administration of these surveys the same person must administer all surveys.

The method used to distribute the surveys to selected personnel will vary from department to department. If your fire department is large and well diversified, the surveys can be distributed as part of a group training exercise. The surveys can be administered during different exercises until representative sampling is achieved. If your department is small to mid-size, and not well diversified, you can administer the surveys to an entire station or shift that has the required representative sampling. Your department's Personnel Section or Human Resources Department should be able to assist you with identifying the work locations of underrepresented members.

ADMINISTRATION OF SURVEYS

Once a group of survey participants have been assembled, the transportability study leader must distribute the job task surveys and #2 pencils with instructions to all participants not to proceed until all instructions have been read and understood. The transportability study leader reads the following instructions after all survey participants have received a job task survey and a #2 pencil:

Please open your booklets to page one and follow along as I read the instructions. The instructions must be followed exactly. Please do not proceed to the survey until I have read the instructions.

The CPAT is a comprehensive evaluation system that evaluates whether fire fighter candidates possess the minimal physical ability to commence training as an entry-level fire fighter.

Your fire department, as the employer, has elected to validate the test for use by your department. The validation effort will require you to participate in a survey regarding fire fighter job requirements. We need you to identify, based on your experience, the critical and physical tasks that all fire fighters must perform.

Your responses to the questionnaire and participation will be completely confidential. You are not required to state your name or provide any identifiers. You have been randomly selected and will remain anonymous. Your completed questionnaire will be collected and analyzed to determine if the CPAT is suitable for use by your department.

Initially, the technical committee, made up of members from the original ten participating departments, reviewed job descriptions and job analyses from each of the ten fire departments. From these job descriptions the committee derived a list of 31 physical tasks are critical to the job of fire fighting.

Please rate each task on two scales based on your experience as a fire fighter. First assess the critical nature of the task during a fire emergency. Second, assess the physical effort required to successfully perform each task. Use the following scale:

Criticality

1 = Not Performed
2 = Least Critical (failure to perform results in no negative consequences.)
3 = Important (beneficial for the successful performance of the job.)
4 = Critical (essential for the successful performance of the job.)
5 = Extremely Critical (failure to perform results in extreme negative consequences.)

Physicality

1 = No physical effort required
2 = Minimal physical effort required
3 = Moderate physical effort required
4 = Excessive physical effort required
5 = Maximal physical effort required

As you rate each task for criticality and physicality be sure not to include the rating variable of frequency. Evaluating the frequency of these job functions, or how often these tasks are performed, was determined by the technical committee to be unnecessary. Due to the emergency nature of a fire fighter's job, a critical task is essential regardless of how frequently it may be performed. For example: Very few fighter pilots ever have the experience of ejecting from the seat of a fighter jet. However this is commonly rated as a critical task for a fighter pilot regardless of how frequent the task is performed.

Are there any questions?

Be sure all incorrect responses are erased and all selections are clearly marked.

After you have completed the survey please close the booklet and hand in your survey. Thank you for taking the time to participate in the CPAT implementation effort. Please begin the survey.

EQUIPMENT SURVEY INSTRUCTIONS

OVERVIEW

During the CPAT development process the technical committee developed an equipment survey to identify the type, size and weight of tools, equipment, and personal protective clothing used by each fire department. Additionally, local demographic information was requested on building construction and codes as well as the average weights of fire fighters and patients admitted to local hospitals and emergency departments.

From the Equipment Survey data, the technical committee developed the standard weights and types of tools and equipment, established the distances used in the course layout, and determined the lengths used in prop and test equipment design.

PERFORMING THE EQUIPMENT SURVEY

The accuracy of your responses to the survey is critical. Inaccurate information can jeopardize your department's ability to utilize the CPAT program. Please follow these steps to insure accurate information:

- Locate the equipment listed on the survey.
- Measure and weigh each piece of equipment using accurate scales (lbs.) and measurement instruments (feet/inches) as identified in the survey. Weights and lengths of equipment taken from specification sheets and or catalogs are also acceptable.
- Insert weights and measures in the appropriate blanks on the survey.
- Fill in the required information on the person who compiled the measurements.
- Compare your survey results with the results of from the 10 task force departments.

EVALUATION OF JOB ANALYSIS AND EQUIPMENT SURVEY

The job analysis survey data must be analyzed to determine if your fire department is similar to the original 10 fire departments. Comparisons should be made using the original 10 fire department's job analysis found within Appendix E. Furthermore, you must be able to demonstrate that your department personnel rate each of the eight CPAT-related tasks similarly as the original 10 fire departments.

The equipment survey data for your fire department must also be compared to the original 10 fire departments. This data must demonstrate that your fire department uses similar equipment as did the original 10 fire departments, and more importantly what each of the eight CPAT events requires.

It is important the data is properly analyzed. A testing expert should perform the final data analysis and report to ensure the data comparisons are within the limits to allow your fire department to use the CPAT,

LICENSURE

To ensure that the CPAT is being used properly and used only as intended employers responsible for hiring fire fighter candidates must apply for CPAT licensure. This procedure was instituted by the Task Force to protect the integrity of the CPAT Program and the interests of the members of the IAFF and the IAFC by ensuring that the program is implemented properly and as intended.

Under the current policy, authorization to use the CPAT will only be granted to fire departments and other entities

that will be fully administering the CPAT Program. Limiting the granting of licenses to only those entities that actually administer the program have enabled us to better ensure that the CPAT is only being administered in strict compliance with the licensing agreement.

Third party testing organizations (including but not limited to state/provincial fire academies, colleges/universities, or for profit and not for profit testing agencies) that only administer the physical testing portion of the CPAT may apply for a Limited License. Such Limited Licenses allow such third party testing organizations to use the CPAT for purposes of testing the physical capability of fire fighter candidates. However, this license is granted only upon the express conditions that the licensee may only administer the CPAT for a fire department that already possesses a complete and valid license from the IAFF. These Limited License organizations then operate under the license of the jurisdiction that is responsible for administering the overall CPAT Program.

In addition, a fire department that uses another fire department's resources and facilities to test candidates must apply for a license of their own. The licensing policy ensures that the CPAT Program used by the licensee fully covers every aspect of the CPAT, including recruiting and mentoring programs, orientations, and pre-test, so as to provide recruits with fitness guidance to help prepare them for the CPAT and setting up and administering the test.

If you are contemplating use of the CPAT, you need to complete and forward an application found at www.iaff.org/safe/cpatlicense. As soon as an acceptable application for a CPAT license is completed and received by the IAFF, setting forth the terms and conditions that you will be required to follow in your utilization of the CPAT, a license will be forwarded to you. Any use of the CPAT without a license or any misuse of the CPAT program is a violation of the IAFF copyright on this program. ■

CHAPTER 4
PREPARATION, ORIENTATION & PRACTICE SESSIONS

The CPAT is a widely used, comprehensive physical ability test designed specifically for the fire service. Use of the CPAT now requires specific requirements for candidate preparation, orientation and practice sessions. Pursuant to the conciliation agreement with the EEOC, the CPAT program must provide all candidates an opportunity to attend at least two CPAT orientations. Additionally, all candidates must receive "hands-on" familiarity with the test apparatus and receive guidance on specific conditioning regimens and techniques to help them prepare for the test. Each candidate shall also be provided an opportunity to perform practice runs of the CPAT.

PREPARATION

The employer must provide all candidates with pretest materials to ensure that all candidates have an equal opportunity to compete for the job of fire fighter. Such a preparation guide provides all candidates, regardless of their background or experience in exercise principals and techniques, the same opportunity to succeed. Similarly, this helps the department avoid failing candidates who are physically capable but unprepared for testing.

The preparation guide must include information on:

- The physical demands of the Candidate Physical Ability Test (CPAT)
- The necessity of proper hydration
- Basic training principles
- Warm up techniques
- Flexibility techniques
- Muscular strength/endurance techniques
- Cardiovascular endurance techniques
- Training techniques for those without a gym or specialized equipment

A sample CPAT Preparation Guide is included in Appendix B.

It is mandatory that all candidates receive a preparation guide at least eight weeks prior to their CPAT date. The guide can be distributed at the time of application or at the orientation prior to the CPAT. In addition, departments may distribute the preparation guide during recruitment activities and such materials should be a part of all mentoring activities.

ORIENTATION

As initially designed and developed, the CPAT provided for ***voluntary*** orientation sessions intended to familiarize candidates with the test apparatus and requirements. However, increased orientation and practice opportunities significantly improve the ability of all candidates to complete the CPAT within the "cut off" time of 10 minutes and 20 seconds. Therefore, it is now ***mandatory*** that all candidates must be given the opportunity to attend at least two (2) orientation sessions, with the first session taking place at least eight (8) weeks prior to the actual test date.

During the sessions, candidates will receive "hands on" familiarity with the actual CPAT apparatus. Also during the orientation sessions, Certified Peer Fitness Trainers, fitness professionals, and/or CPAT-trained fire fighters (proctors) shall familiarize all candidates with each task and apparatus, and shall advise all candidates concerning specific conditioning regimens and techniques to help them prepare for the CPAT. The comprehensive procedures for conducting CPAT orientation sessions are found in Appendix B.

PRACTICE SESSIONS

Fire departments utilizing the CPAT shall also ensure that all candidates have full and equal opportunity to perform at least two (2) timed practice runs, using actual CPAT apparatus and completing the entire course. These ***mandatory*** practice sessions shall occur within thirty (30) days of the official test date. Again, Certified Peer Fitness Trainers, fitness professionals and/or CPAT-trained fire fighters (proctors) shall help the candidates understand the test elements and how they can improve their performance and conditioning.

In order to reduce the burden on a department's resources, it is permissible for a candidate to pass the CPAT during either of the practice sessions, provided that the department has fully staffed and administered the test as they would on the official test day. However, a candidate who passes the CPAT during a practice session ***shall not*** be rank ordered ahead of any candidate who requires both practice sessions and the official test to pass the CPAT.

WAIVER

Although the two-phased orientation and practice program set forth above must be treated by the fire department as a mandatory condition for candidates taking the CPAT test, it is recognized that fire departments are likely to have candidates in their candidate pool who believe that they are capable of passing the CPAT without attending the orientation and practice program. It is also recognized that resources devoted to the orientation and practice program are best spent on those candidates who will truly benefit from this assistance. It is therefore permissible for fire departments to excuse candidates from this requirement upon receipt of a written and signed waiver from the candidate acknowledging that this orientation and practice program was made available to all candidates on an equal basis and that the candidate voluntarily and knowingly waives the opportunity to participate in the orientation and practice program.

It is required that all those that are licensed to use the CPAT must fully implement these orientation and pre-test procedures. The US Equal Employment Opportunity Commission (EEOC) has also agreed to not bring a lawsuit through April 2011, based upon any claim that the CPAT has an adverse impact for female candidates, against any fire department that utilizes CPAT in conformity with those conditions in their pre-test programs. For those fire departments that are utilizing another Licensee to conduct their CPAT, such fire department, as the employer, must ensure that these changes are incorporated. The EEOC Conciliation Agreement setting forth the foregoing is found in Appendix F. ■

CHAPTER 5
CPAT EVENTS

PRE-TEST PROCEDURES

The CPAT consists of eight separate events. This test is a sequence of events that requires the candidate to progress along a predetermined path from event to event in a continuous manner. This is a pass/fail test based on a maximum total time of 10 minutes and 20 seconds.

In these events, the candidate wears a 50-pound (22.68-kg) vest to simulate the weight of self-contained breathing apparatus (SCBA) and fire fighter protective clothing. An additional 25 pounds (11.34 kg), using two 12.5-pound (5.67-kg) weights that simulate a high-rise pack (hose bundle), is added for the stair climb event.

Throughout all events, the candidate must wear long pants, a hard hat with chin strap, work gloves and footwear with no open heel or toe. Watches and loose or restrictive jewelry are not permitted.

All props were designed to obtain the necessary information regarding the candidate's physical ability. The tools and equipment were chosen to provide the highest level of consistency, safety and validity in measuring the candidate's physical abilities. Schematic drawings and specifications for each prop and specific product information and product numbers are provided in Appendix C. Modification of props or substitution of tools/equipment may alter the content of the test and therefore are not permitted. The entire test is designed to be portable and allow for either indoor or outdoor setup. The floor of the venue must be consistent for all events and for all candidates.

The events are placed in a sequence that best simulates their use in a fire scene while allowing an 85-foot (25.91-m) walk between events. To ensure the highest level of safety and to prevent candidate from exhaustion, no running is allowed between events. This walk allows the candidate approximately 20 seconds to recover and regroup before each event. If the candidate runs between events they receive one warning. A second infraction constitutes a failure, the test time is concluded and the candidate fails the test.

To ensure scoring accuracy by eliminating timer failure, two stopwatches are used to time the CPAT. One stopwatch is designated as the official test time stopwatch, the second is the backup stopwatch. If mechanical failure occurs on the official stopwatch, the time on the backup stopwatch is used. The stopwatches are set to the pass/fail time and count down from 10 minutes and 20 seconds. If time elapses prior to the completion of the test, the test is concluded and the candidate fails the test.

TEST PROCEDURES

The CPAT includes eight sequential events as follows:

- Stair Climb
- Hose Drag
- Equipment Carry
- Ladder Raise and Extension
- Forcible Entry
- Search
- Rescue
- Ceiling Breach and Pull

EVENT 1 STAIR CLIMB

EQUIPMENT

StairMaster StepMill — NOTE: Position the unit with one side up against a wall and the specified elevated platform on the side opposite the wall. The handrail on the side opposite the wall is to be removed. The handrail on the wall side is left in place for the candidate to grasp while mounting and dismounting the StepMill. Additional steps are to be placed at the base of the StepMill to reduce the height needed to mount the StepMill.

PURPOSE OF EVALUATION

This event is designed to simulate the critical tasks of climbing stairs in full protective clothing while carrying a high-rise pack (hose bundle) and climbing stairs in full protective clothing carrying fire fighter equipment. This event challenges the candidate's aerobic capacity, lower body muscular endurance and ability to balance. This event affects the aerobic energy system as well as the following muscle groups: quadriceps, hamstrings, glutes, calves, and lower back stabilizers.

EVENT

During this event, the candidate is required to wear two 12.5-pound (5.67-kg) weights on the shoulders to simulate the weight of a high-rise pack (hose bundle). Prior to the initiation of the timed CPAT, the candidate has a 20-second warm-up on the StepMill at a set stepping rate of 50 steps per minute [Level 3]. During this warm-up period, the candidate is permitted to dismount, grasp the rail or hold the wall to establish balance and cadence. If the candidate falls or steps off the StepMill during the 20-second warm-up period, the candidate is required to remount the StepMill and restart the entire 20-second warm-up period. The candidate is allowed to restart the warm-up period twice. There is no break in time between the warm-up period and the actual timing of the test. The timing of the test begins at the end of this warm-up period when the proctor calls out "START." For the test, the candidate is re-

quired to walk on the StepMill at a set stepping rate of 60 steps per minute [Level 4] for 3 minutes. This concludes the event. The two 12.5-pound (5.67-kg) weights are removed from the candidate's shoulders. The candidate walks 85 feet (25.91 m) within the established walkway to the next event.

The following practices are allowed:

- The candidate is allowed to ***briefly*** touch the handrails or wall for balance
- The candidate is given up to two warnings for grabbing the handrails or bearing their body weight on the handrails / wall
- The candidate is allowed to restart the warm-up period twice

The following practices constitute a failure:

- The candidate falls or voluntarily dismounts the Step Mill three times during the warm up.
- The candidate falls or voluntarily dismounts the Step Mill after the start of the test.
- The candidate commits a third infraction for grasping the handrails or bearing weight on the handrails / wall after the start on the test.

Reasons for failure

- Falling demonstrates poor balance or muscular endurance and could cause injury to the candidate.
- Using the handrails or wall for weight bearing gives the candidate a mechanical advantage that may not be available to them on the fire ground or demonstrates poor balance, conditioning or muscular endurance.

EVENT 2 HOSE DRAG

EQUIPMENT

- 200 feet (60 m) of double jacketed 1 3/4-inch (44-mm) hose - hose is marked at 8 feet (2.44 m) past the coupling at the nozzle and at 50 feet (15.24 m) past the coupling at the nozzle
- Automatic Nozzle - 6 lbs (± 1lb), 3 kg (± .5 kg)
- Two 55-gallon (US) (208.2-liter) Drums secured together - bottom drum is filled with water or other ballast for weight

PURPOSE OF EVALUATION

This event is designed to simulate the critical tasks of dragging an uncharged hoseline from the fire apparatus to the fire occupancy and pulling an uncharged hoseline around obstacles while remaining stationary. This event challenges the candidate's aerobic capacity, lower body muscular strength and endurance, upper back muscular strength and endurance, grip strength and endurance, and anaerobic endurance. This event affects the aerobic and anaerobic energy systems as well as the following muscle groups: quadriceps, hamstrings, glutes, calves, lower back stabilizers, biceps, deltoids, upper back, and muscles of the forearm and hand (grip).

EVENT

During this event, the candidate grasps an automatic nozzle attached to 200 feet (60 m) of 1 3/4-inch (44-mm) hose. The candidate places the hoseline over the shoulder or across the chest, not exceeding the 8-foot (2.44-m) mark. The candidate is permitted to run during the hose drag. The candidate drags the hose 75 feet (22.86 m) to a prepositioned drum, makes a 90° turn around the drum and continues an additional 25 feet (7.62 m). The candidate then stops within the marked 5 foot x 7 foot (1.52 m x 2.13m) box, drops to at least one knee and pulls the hoseline until the hoseline's 50-foot (15.24-m) mark is across the finish line. During the hose pull, the candidate must keep at least one knee in contact with the ground and knee(s) must remain within the marked boundary lines. This concludes the event. The candidate walks 85 feet (25.91 m) within the established walkway to the next event.

The following practices are allowed:

- The candidate is given one warning to keep one knee down.
- The candidate is given one warning to keep the knees in bounds.
- The candidate is given one warning for taking one step out of the box.
- The candidate is permitted to run during the hose drag

The following practices constitute a failure:

- The candidate fails to go around the drum.
- The candidate travels outside of the marked path.
- The candidate takes two steps out of the back of the box
- The candidate commits a second infraction for not keeping one knee in contact with the ground.
- The candidate commits a second infraction for the knees being outside of the marked boundary.

Reasons for failure:

- Running beyond the marked path gives the candidate a mechanical advantage by decreasing the distance required to pull the hose by hand. This advantage may not be available on the fire ground. This demonstrates a lack of upper body strength by using lower body strength to compensate.
- By not keeping their knee on the floor a candidate could compensate for a deficiency in grip and upper body strength by standing up.

EVENT 3 EQUIPMENT CARRY

EQUIPMENT

- Rescue Circular Saw 32 ± 3 lbs (14.5 ± 1.3 kg); Chain Saw 28 ± 3 lbs (12.7 ± 1.3 kg) (blades guarded, fluids drained, spark plugs removed)
- Tool Cabinet
- 55-gallon [US] (208.2-liter) weighted drum

Purpose of Evaluation

This event is designed to simulate the critical tasks of removing power tools from a fire apparatus, carrying them to the emergency scene and returning the equipment to the fire apparatus. This event challenges the candidate's aerobic capacity, upper body muscular strength and endurance, lower body muscular endurance, grip endurance, and balance. This event affects the aerobic energy system as well as the following muscle groups: biceps, deltoids, upper back, trapezius, muscles of the forearm and hand (grip), glutes, quadriceps, and hamstrings.

EVENT

During this event, the candidate removes the two saws from the tool cabinet, one at a time, and places them on the ground. The candidate then picks up both saws, one in each hand, and carries them while walking 75 feet (22.86 m) around the drum, then back to the starting point. The candidate is permitted to place the saw(s) on the ground and adjust the grip. Upon return to the tool cabinet, the candidate places both saws on the ground, then picks up each saw one at a time, and replaces the saw in the designated space in the cabinet. This concludes the event. The candidate walks 85 feet (25.91 m) within the established walkway to the next event.

The following practice is allowed:

- The candidate is given one warning for running.
- The candidate is allowed to set the tools on the ground to adjust and re-establish the grip.

The following practices constitute a failure:

- The candidate drops either saw during the carry.
- The candidate commits a second infraction for running with the saws.

Reasons for failure

- Dropping the saws could injure the candidate and demonstrates poor grip strength or muscular endurance.
- Running with saws could cause injury if the candidate trips.

EVENT 4 LADDER RAISE AND EXTENSION

EQUIPMENT

Two 24-foot (7.32-m) aluminum ground ladders
Pivoting bracket for ladder raise
Retractable Safety Lanyard for ladder raise
Attaching brackets for ladder extension

PURPOSE OF EVALUATION

This event is designed to simulate the critical tasks of placing a ground ladder at a fire structure and extending the ladder to the roof or window. This event challenges candidate's aerobic capacity, upper body muscular strength, lower body muscular strength, balance, grip strength, and anaerobic endurance. This event affects the aerobic and anaerobic energy systems as well as the following muscle groups: biceps, deltoids, upper back, trapezius, muscles of the forearm and hand (grip), glutes, quadriceps, and hamstrings.

EVENT

During this event, the candidate walks to the top rung of the 24-foot (7.32-m) aluminum extension ladder, lifts the first rung at the unhinged end from the ground, and walks it up until it is stationary against the wall. This must be done in a hand over hand fashion, using each rung until the ladder is stationary against the wall. The candidate must not use the ladder rails to raise the ladder. The candidate immediately proceeds to the pre-positioned and secured 24-foot (7.32-m) aluminum extension ladder, stands with both feet within the marked box of 36 inches x 36 inches (91.44 cm x 91.44 cm) and extends the fly section hand over hand until it hits the stop. The candidate then lowers the fly section hand over hand in a controlled fashion to the starting position. This concludes the event. The candidate walks 85 feet (25.91 m) within the established walkway to the next event.

The following practices are allowed:

- The candidate is given one warning for missing any rung during the raise.
- The candidate is given one warning for a boundary violation during the ladder extension.

The following practices constitute a failure:

- The candidate commits a second infraction for missing any rung during the raise.
- The candidate allows the ladder to fall to the ground during the raise.
- The candidate releases their grip on the ladder and the safety lanyard activates.
- The candidate commits a second infraction for not remaining within the marked boundary during the ladder extension.
- The candidate does not control the halyard in a hand over hand manner.
- The candidate allows the halyard to slip in an uncontrolled manner.

Reasons for failure

- Skipping rungs would give a taller candidate an advantage over a shorter candidate and is therefore not permitted. It would also allow the candidate to throw the ladder up in the air which is both unsafe and unavailable to the candidate at a fire scene when the base of the ladder is not hinged to the ground.
- Failure to completely raise the ladder demonstrates poor grip and muscular strength.
- A candidate could gain an advantage by walking the halyard backward to compensate for poor upper body strength. This compensation is not available on the fire ground where the ladder is not bolted to the fire structure.
- Failure to control the ladder indicates poor grip strength as well as muscular strength and endurance.

EVENT 5 FORCIBLE ENTRY

EQUIPMENT

- Forcible Entry Machine
- 10-pound (4.54-kg) Sledgehammer
- Toe-Box

PURPOSE OF EVALUATION

This event is designed to simulate the critical tasks of using force to open a locked door or to breach a wall. This event challenges the candidate's aerobic capacity, upper body muscular strength and endurance, lower body muscular strength and endurance, balance, grip strength and endurance, and anaerobic endurance. This event affects the aerobic and anaerobic energy systems as well as the following muscle groups: quadriceps, glutes, triceps, upper back, trapezius, and muscles of the forearm and hand (grip).

EVENT

During this event, the candidate uses a 10-pound (4.54-kg) sledgehammer and strikes the measuring device in the target area until the buzzer signal is activated. The candidate's feet must remain outside the toe-box. After the buzzer is activated, the candidate places the sledgehammer on the ground. This concludes the event. The candidate walks 85 feet (25.91 m) within the established walkway to the next event.

The following practice is allowed:

- The candidate is given one warning for stepping inside the toe-box.

The following practices constitute a failure:

- The candidate fails to maintain control of the hammer while swinging.
- The candidate commits a second infraction for stepping inside the toe-box.

Reason for failure:

- Failure to maintain control of the hammer indicates poor grip strength and muscular endurance and could cause injury to the candidate and proctors.

EVENT 6 SEARCH

EQUIPMENT

- Search Maze

PURPOSE OF EVALUATION

This event is designed to simulate the critical task of searching for a fire victim with limited visibility in an unpredictable area. This event challenges the candidate's aerobic capacity, upper body muscular strength and endurance, agility, balance, anaerobic endurance, and kinesthetic awareness. This event affects the aerobic and anaerobic energy systems as well as the following muscle groups: muscles of the chest, shoulder, triceps, quadriceps, abdominals, and lower back.

EVENT

During this event, the candidate crawls on hands and knees through a tunnel maze that is approximately 3 feet (91.44 cm) high, 4 feet (121.92 cm) wide and 64 feet (19.51 m) in length with two 90° turns. At a number of locations in the tunnel, the candidate navigates around, over and under obstacles. In addition, at two locations, the candidate crawls through a narrowed space where the dimensions of the tunnel are reduced. The movement is monitored/listened to as the candidate advances through the maze. If for any reason, the candidate chooses to end the event, the candidate calls out or raps sharply on the wall or ceiling and the candidate is then assisted out. Upon exit from the maze, the event is concluded. The candidate walks 85 feet (25.91 m) within the established walkway to the next event.

The following practices are allowed:

- The candidate can return into the tunnel if they exit through the entrance.

The following practices constitute a failure:

- The candidate requests assistance from the proctor requiring the opening of an escape hatch or the entrance/exit covers.

Reasons for failure:

- Failure to finish the event indicates a lack of confidence in dark or confined spaces.

EVENT 7 RESCUE

EQUIPMENT

- 165-pound (74.84-kg) Mannequin (unclothed)
- Mannequin harness
- 55-gallon [US] (208.2-liter) weighted drum

PURPOSE OF EVALUATION

This event is designed to simulate the critical task of removing a victim or injured partner from a fire scene. This event challenges the candidate's aerobic capacity, upper and lower body muscular strength and endurance, grip strength and endurance, and anaerobic endurance. This event affects the aerobic and anaerobic energy systems as well as the following muscle groups: quadriceps, hamstrings, glutes, abdominals, torso rotators, lower back stabilizers, trapezius, deltoids, latissimus dorsi, biceps, and muscles of the forearm and hand (grip).

EVENT

During this event, the candidate grasps a 165-pound (74.84-kg) mannequin by the handle(s) on the shoulder(s) of the harness (either one or both handles are permitted), drags it 35 feet (10.67 m) to a pre-positioned drum, makes a 180° turn around the drum, and continues an additional 35 feet (10.67 m) to the finish line. The candidate is not permitted to grasp or rest on the drum. It is permissible for the mannequin to touch the drum. The candidate is permitted to lower the mannequin to the ground to adjust their grip. The entire mannequin must be dragged past the marked finish line. This concludes the event. The candidate walks 85 feet (25.91 m) within the established walkway to the next event.

The following practices are allowed:

- The candidate receives one warning for grabbing or resting on the drum.
- The candidate is permitted to grab either one or both handles when dragging the mannequin
- The candidate is permitted to lower the mannequin to the ground to adjust their grip

The following practices constitute a failure:

- The candidate commits a second infraction for grabbing or resting on the drum.

Reasons for failure

- Use of the drum by either grasping or resting on it indicates a lack of muscular strength and endurance.

EVENT 8 CEILING BREACH AND PULL

EQUIPMENT

- Ceiling Breach and Pull Device
- 6-foot (1.83-m) Pike Pole

PURPOSE OF EVALUATION

This event is designed to simulate the critical task of breaching and pulling down a ceiling to check for fire extension. This event challenges the candidate's aerobic capacity, upper and lower body muscular strength and endurance, grip strength and endurance, and anaerobic endurance. This event affects the aerobic and anaerobic energy systems as well as the following muscle groups: quadriceps, hamstrings, glutes, abdominals, torso rotators, lower back stabilizers, deltoids, trapezius, triceps, biceps, and muscles of the forearm and hand (grip).

EVENT

During this event, the candidate removes the pike pole from the bracket, stands within the boundary established by the equipment frame, and places the tip of the pole on the painted area of the hinged door in the ceiling. The candidate fully pushes up the 60-lb hinged door in the ceiling with the pike pole three times. The candidate then hooks the pike pole to the 80-lb ceiling device and pulls the pole down five times. Each set consists of three pushes and five pulls. The candidate repeats the set four times. The candidate is permitted to stop and, if needed, adjust the grip. Releasing the grip or slipping from pike pole handle, without the pike pole falling to ground, does not result in a warning or constitute a failure. The candidate may re-establish the grip and resume the event. If the candidate does not successfully complete a repetition (i.e. complete the up and down motion), the proctor calls out "MISS" and the candidate must push or pull the apparatus again to complete the repetition. The event and the total test time ends when the applicant completes the final pull stroke repetition as indicated by the proctor who calls out "TIME".

The following practices are allowed:

- The candidate receives one warning for dropping the pike pole on the ground.
- The candidate receives one warning for stepping out of bounds.
- The candidate is permitted to stop and to re-establish grip

The following practices constitute a failure:

- The candidate commits a second infraction for stepping outside of the boundary marked by the testing apparatus.
- The candidate commits a second infraction for dropping the pike pole.

Reasons for failure:

- Stepping out of bounds allows the candidate to use body weight to compensate for poor upper body strength, an advantage by that may not be an option on the fire ground.
- Failure to maintain control of the pike pole indicates poor grip strength and muscular endurance. ■

CHAPTER 6
CPAT AMINISTRATION

CPAT ADMINISTRATION

Consistent CPAT administration is essential to the continued success of the CPAT program throughout North America. Adhering strictly to the policies and procedures in this manual ensure that test administration is consistent from one candidate to another and avoids any biases. This chapter must be followed to ensure CPAT Administrators are able to:

- Administer all aspects of the CPAT program.
- Choose a proper CPAT Venue.
- Decide whether or not to administer the CPAT based on environmental conditions.
- Register candidates for the CPAT.
- Administer the CPAT using the proper forms.
- Schedule candidates for the CPAT.
- Orient candidates on official test day.
- Stage waiting candidates on official test day.
- Assign support personnel to assist with the CPAT (i.e. Rehab, equipment maintenance, dress out, check in, filing, etc.).
- Assign roles and responsibilities to lead and event proctors.
- Describe the legal necessity for following the CPAT requirements to the letter.
- Describe the requirements and purpose of the CPAT candidate orientation and practice sessions.

VENUE SELECTION

The venue selected to conduct the test is critical. The site must have a floor surface that will not give any candidate an unfair advantage or disadvantage and should be similar to that used during test validation. Therefore, the test must be conducted on a surface with friction values similar to that of an *unpolished* concrete floor.

The venue should have an area large enough to accommodate check-in/staging, test and rehabilitation areas. The check-in/staging area is dedicated to receiving candidates as they report for their CPAT. If possible, the check-in/staging area should be isolated from the actual CPAT site so arriving candidates are not distracted by the candidates actually performing the test. The test area must also be large enough so structures, walls or obstacles do not restrict a candidate's ability to perform the events.

A rehabilitation area must be provided to allow candidates recovery time before leaving the test site. In rehabilitation, proctors provide candidates with a shaded area where they can re-hydrate and have their vital signs monitored if medically indicated.

USING AN INDOOR SITE

Administering the CPAT indoors insures that environmental conditions are controlled no matter what time of year the test is offered. There are several physical requirements an indoor CPAT facility should have. Indoor CPAT facilities will vary depending on department budget, frequency of use, and available buildings. Listed are two extreme (large and small) examples of indoor CPAT facilities that are currently in use.

Large fairground exhibit hall or aircraft hangar

- 20,000 to 25,000 square feet of open space with a ceiling height of 24 feet (ladder modification will allow ceiling height of 18 ft.)
- 2,000 square feet of open space for workout area
- 2,000 square feet of air conditioned, well lit, classroom space
- 500 square feet of air-conditioned office space
- 1,000 square feet of storage space

Small warehouse

- 5,000 plus square feet of open space with ceiling height of 24 feet (ladder modification will allow ceiling height of 18 ft.)
- 100 — 200 square foot workout area
- 100 — 200 square foot classroom area
- 200 — 300 square feet of air-conditioned office space
- Ability to store extra props and tools within warehouse area. May be a space designated within the CPAT area but in a location where candidates are not permitted.

The area designated for the CPAT should have an air cooling and heating system (HVAC), adequate lighting and electrical capabilities to energize props. Air conditioning is preferred but due to the expense, evaporative cooling would be sufficient. In order to insure the highest level of safety, the area must be well lit. In addition, the area will require a 110/120-volt electrical outlet every 50 feet on each side to accommodate CPAT prop placement. Finally, the building must have restroom facilities for both females and males.

LOGISTICAL AND ENVIRONMENTAL FACTORS

Environmental factors can have a significant effect on a candidate's test performance. The test should be conducted in environmental conditions that optimize the candidate's safety and provide for consistency among candidates. The test must not be conducted in excessively hot, cold or wet conditions. Candidates must not be tested in an environment where the temperature is below 45°F (7°C), the

Apparent Heat Index (temperature and humidity) is greater than 95°F (35°C), sustained wind is greater than 20 mph (32 kph), or there is a measurable amount of rain (light drizzle only if working surfaces are safe to walk on and props, tools and test equipment can be kept dry).

TEST PROPS

Test props must be in the highest serviceable condition when positioned for the orientation, practice sessions and actual test. Each prop must be properly calibrated and affixed using the highest grade of attachment anchors. It is imperative that props be located in an area with sufficient space for candidates to maneuver their bodies and manipulate the prop. If possible, backup props should be held in reserve in the event that frontline equipment is damaged. Lines indicating the course direction also must be clearly marked. Candidates who experience a malfunctioning test prop must be allowed to re-test regardless of the time remaining and/or the event where the candidate experienced the malfunction.

COURSE LAYOUT

The CPAT can be constructed indoors, outdoors, within small confined areas or large open spaces. Whatever area is selected, it is important to follow all prop and course specifications as written in this manual. Failure to follow these specifications can jeopardize the validity of the test.

DESIGNING THE COURSE

The first step in designing the course and building the props is making sure you have all the right equipment. A complete prop list can be found in Appendix D including the necessary quantities and where to purchase the equipment. The list includes props that must be purchased through the IAFF-approved vendors as well as props that may be fabricated by fire department personnel.

Designing the course is easiest when ample space is available. The smaller the area the more difficult to design and build the course due to the number of turns that have to be included within the design. Following these steps when designing a course can save considerable effort:

Note: When laying out a course, all events must be positioned 85 feet apart. This means the base of the StepMill should be 85 feet away from the tip of the nozzle at event 2. If you cannot make a straight line from one event to the other, insert turns to create more distance. To measure the 85 feet is to use a 100-foot tape measure or a string that is 85 feet long (do not stretch) and have people to assist with creating turns in the middle as people hold each end at the respective props.

Step 1

Identify the area where the stationary items such as the search maze, forcible entry machine, and ladders will be located. Of the three, the most important location is the search maze. It should be positioned in a flat area where the space behind it is virtually unusable. The area where the search maze is located is critical because it is the most difficult of all the props to move. Before committing to the location where you think it should go, be sure to measure out all prop locations to be certain the entire course will fit in the space provided.

Step 2

Once the search maze is positioned, move away from the entrance and the exit to mark the positions of the forcible entry machine and dummy drag respectively. Continue to move away from these props and mark the next events in line. Be careful not to cross lines when possible. Crossing lines may cause the candidates to interfere with one another if more than one candidate is on the course. Other things to consider when positioning props:

- The StepMill in event one must be placed so one side is against a wall and a 120V power outlet is available within extension cord distance
- Event 1 should be located near the area where the candidates will be dressing out and warming up
- The Hose Drag needs at least 75' straight distance
- The Equipment Carry needs at least 75' straight distance
- If using a portable trailer, the ladders and forcible entry machine are mounted on the trailer so the 85' distance between these events is made using turns
- The rehabilitation area should be located near event 8 so that the candidates will not have to travel far after completing the test

Step 3

Once the general positions of the props have been identified, the next step is to assemble the props. Begin by setting up the Search Maze first. Re-check distance between events and mark final walking paths. Assemble all props to the specifications listed in Appendix D. The following is additional information that may assist when building the props:

EVENT 1 - STAIR CLIMB

One side of the StepMill should be positioned against a wall that extends just higher than a candidate's head when he/she is standing on the top step of the StepMill. With the one side of the StepMill placed against the wall, the opposite handrail should be removed and the control console removed. The control console should be positioned on the proctor's stand that is located on the right side of

the StepMill. The proctor stand should be built in accordance with the specifications found in Appendix D. With the console in this position, the event proctor can better monitor the time while also having immediate access to the stop button. A candidate step must also be constructed. The step should be positioned at the base of the StepMill where the candidate mounts and dismounts the machine. The step should also meet the specifications found in Appendix D.

The 85' walk starts where the candidate steps off the StepMill on the ground and ends at the tip of the nozzle where the candidate picks up the hose to begin event two.

EVENT 2 - HOSE DRAG

The hose must be marked at 2 different locations. The first mark should be placed 8 feet from the coupling at the tip. This mark indicates where the candidate is allowed to pick up the hose to begin extending around the drum. The second mark is placed at the first coupling beyond the tip and is to indicate the section of the hose the candidate must pull into the 5' x 7' box.

The 75' from the nozzle to the drum and the 25' from the drum to the 5' x 7' box must be positioned in accordance with Appendix D.

The 85' walk starts where the candidate exits the 5' x 7' box to begin walking to the next event. The measurement starts at the point where the walk line meets the 5' x 7' box and ends at the base of the cabinet where the candidate removes the saws in event three.

EVENT 3 - EQUIPMENT CARRY

The equipment carry cabinet must be constructed in accordance with the specifications found in Appendix D.

The 85' walk starts at the center of the cabinet where the candidate places the saws and ends at the tip of the 24' extension ladder lying flat on the ground in event four.

EVENT 4 - LADDER RAISE AND EXTENSION

The halyard on the ladder used for flat raise should be removed. This halyard may be used as a back up for the upright extension ladder. With the halyard removed, the rungs should be taped to prevent the ladder from slipping while it is raised and lowered.

Remove dogs/locks on the upright extension ladder. This prevents "hang-ups" of ladder on rungs as it is being extended and lowered by the candidate. The manufacturer's halyard is used on the upright extension ladder; however, replacement halyards of the same type can be purchased at any hardware store.

The ladders must be positioned in accordance with the specifications found in Appendix D. NOTE: It makes no difference which ladder is on the left and which one is on the right as long as they are the proper distance apart.

The 85' walk starts where the candidate exits the 3' x 3' box at the base of the upright/extension ladder and ends directly below the face of the hitting pad of the forcible entry device in event five.

EVENT 5 - FORCIBLE ENTRY

The four posts that the forcible entry striking pad slides on must be well maintained and kept free from moisture. The slightest moisture will cause the posts to rust. Moisture will also cause the brake shaft within the unit to rust. Both of these areas of the forcible entry device must be kept clean to ensure proper calibration is maintained. The toe board should be constructed and positioned in accordance with the specifications found in Appendix D.

NOTE: The recommended tension on the forcible entry machine in the original edition of the CPAT guide was based upon the original Beta Tested Forcible Entry Machine. This machine was provided from New York City and was developed several years ago by a waste management engineer. During the CPAT development, the force required to successfully complete this event was compared to the force required to successfully force entry on an actual door. The original Beta version of the Forcible Entry machine had a V-Shaped Wedge that was driven between two brake pads. The tension on these brake pads was provided by 4 adjustable springs. This design was found to be inconsistent since the force to initiate the movement of the striking surface (300lbs) was drastically lower than the force at the end of the exercise (1,300lbs). Furthermore, this design was difficult to calibrate and maintain consistent resistance. To remedy these concerns, our current producer of the forcible entry machine (ALCO) redesigned the wedge and the tensioning device. Currently, the wedge has a minimal V-Shape and the tension is created by 8 airplane grade springs. This design provides a consistent resistance and requires far less calibration during the administration of the test. During the reliability study in Los Angeles County this new design was tested and compared to the Beta version. It was found that the new ALCO machine should be calibrated at 850 lbs. Although, this machine should usually hold its tension for an entire day of testing, the manufacturer recommends recalibrating it after every 15 users.

The 85' walk starts directly below the face of the hitting pad of the forcible entry device and ends at the midpoint of the horizontal face of the entrance to the search maze in event six.

EVENT 6 — SEARCH

Maze must be built to the exact specification in Appendix D. Exit hatches may be placed on the roof or along the walls as long as they do not interfere with the maze obstacles, create new obstacles (flat wall surface inside the maze must be retained), or permit light to penetrate into the maze. Covers for the entrance and exit should be installed so the openings are completely covered and light is not allowed in the maze. The maze should also be sealed to prevent light from entering.

A drape should be placed in front of the first obstacle, just behind the entrance cover. The drape shields the first obstacle from the candidate's view when the cover is lifted for the candidate to enter.

The 85' walk starts at the midpoint of the horizontal face of the exit and ends at the head of the mannequin where the rescue event start/finish line is located in event seven.

EVENT 7 — RESCUE

The mannequin must be without clothing and have the CPAT specified harness fitted onto the chest and shoulders. The legs may be taped at the ankles. The arms may be taped at the wrists in front of the body. Taping of the ankles and wrists prevents limbs from breaking when dragging the mannequin back into the starting position.

The 85' walk starts 6 feet beyond the start/finish line and ends at the base of the ceiling breach and pull machine where the pike pole is located in event eight.

EVENT 8 - CEILING BREACH AND PULL

The pike pole should be located on the nearest approachable upright of the machine, nearest the "push-up" lid end. Use the knee brace bracket to hang the pike pole. The triangular slot on the "push-up" lid and the loop on the "pull-down" lever must be painted red in accordance with the instructions in Appendix D.

PREPARATIONS FOR ADMINISTERING THE TEST

To ensure reliability of the CPAT and to provide candidates with an equitable and consistent test, it is important to stage a full rehearsal of the CPAT prior to testing candidates. It is recommended that props and equipment be set, all involved personnel, including Test Administrators, Lead Proctors and Event Proctors, be in place and a minimum of three fire fighters, acting as candidates, go through the CPAT prior to the commencement of candidate testing.

The following checklists can be used to insure that the lead and event proctors are fully trained and capable of performing their required duties.

CPAT ADMINISTRATOR TRAINING CHECKLIST

- ❑ View CPAT program overview video.
- ❑ Review the venue requirements to run the CPAT.
- ❑ Review the environmental requirements for running the CPAT.
- ❑ Review the procedure for registering candidates including the attire requirements, ID, sign in, and waiver.
- ❑ Review registration of candidates CPAT sign in sheet, CPAT waiver, and candidate attire.
- ❑ Review the paper flow from sign in, to Lead Proctor, to test administrator. (CPAT sign in sheet, CPAT waiver, CPAT evaluation form, CPAT rehabilitation form)
- ❑ Review the logistics of how many candidates to test per hour.
- ❑ View the candidate orientation video.
- ❑ Review orientation of candidates on test day.
- ❑ Review the different types of support personnel and their roles and responsibilities.
- ❑ Review the Roles and Responsibilities of Lead and Event Proctors Lead and Event Proctor Responsibilities.
- ❑ Review the legal and ethical requirement that all candidates have the CPAT administered in the **exact** same fashion.
- ❑ Review the possibility of future litigation and the necessity that all paperwork be accurate.
- ❑ Review the legal requirements as dictated by Title VII (Civil Rights Act) and Uniformed Hiring Guidelines.
- ❑ Review the reasons and requirements for performing a candidate orientation and practice runs.
- ❑ Review the materials that every candidate should receive and the required timing of when they should receive them.
- ❑ Review the showing of the CPAT candidate video and when it should be shown. ■

The test must be administered professionally with all necessary support personnel. The number of candidates you are processing will determine the number of support personnel. The following is a list of personnel roles and responsibilities of each person within the support staff:

CPAT PERSONNEL ROLES AND RESPONSIBILITIES

TEST ADMINISTRATOR

- ■ Provides general direction of CPAT
- ■ Ensures scheduling of candidates is appropriate for facility
- ■ Settles candidates disputes
- ■ Works with data collection person to ensure candidate data is sent to IAFF using CPAT collection software

CHECK IN PERSON

- ■ Checks candidate's ID against schedule list
- ■ Has candidate sign in
- ■ Has candidate complete candidate waiver form
- ■ Fills out name or puts on name label onto CPAT evaluation form for each candidate that reports

CANDIDATE PREP PERSON

- Welcomes candidates to CPAT and shows video
- Reads pre-test instructions
- Takes candidates to staging area after orientation
- Ensures attire is appropriate for test and outfits candidate with test equipment

DATA COLLECTION PERSON

- Enters survey and test data from candidate evaluation form into CPAT data collection software

REHAB PERSONNEL

- Provides candidate with shady area to sit or lay down
- Provides candidate with cold water
- Takes two sets of vitals for each candidate (optional per department's policy)
- Has candidate complete Candidate Rehabilitation Form

MAINTENANCE PERSON

- Provides maintenance on props and venue as required and as scheduled

LEAD PROCTORS

- 2-5 required to maintain flow of candidates
- Accompanies candidate throughout the test, verbalizing instructions while walking slightly behind the candidate in between events
- Completes candidate evaluation form
- Uses countdown timer test to 10:20 to time candidate

EVENT PROCTORS

- Number of event proctors is determined by the number of candidates and the size of the CPAT venue
- Proctors specific test events, giving warnings where appropriate
- Re-sets test props

STAGING, SUPPORT AND SCHEDULING

Scheduling, staging and providing adequate support to the candidates can also have an unfair impact on the candidate's performance, if not properly addressed. Proper scheduling of candidates occurs when candidates are given adequate information regarding the test as well as sufficient time to prepare physically. Sufficient instructors and proctors must be in place during the orientation and actual test. These personnel are responsible for providing the instructions to the candidates and ensuring the test is administered consistently and fairly.

CANDIDATE NOTIFICATION

Candidates should be notified well in advance of their orientation practice runs, and test dates. Each candidate must be informed of the opportunity to attend orientation and practice run sessions prior to actually taking the test. The candidate must also be informed of the procedures for waving such orientations and practice runs. Refer to the CPAT Orientation Guide for specific elements of candidate orientation and practice runs.

RETESTING

Candidates must be provided the opportunity to have their CPAT rescheduled if any tool, prop, or test equipment failed during the test. Candidates should also be informed of the procedures, if any, that the jurisdiction has adopted for retaking the test if the candidate fails.

CPAT SUPPORT PERSONNEL DUTIES AND RESPONSIBILITIES

The selection of the test administrator and proctors must be done with care. Individuals from your fire department's personnel department, operations section, training division, or from your jurisdiction's human resource department can assist with test administration. These individuals must be knowledgeable regarding testing procedures and familiar with legal issues surrounding candidate testing. Prior to conducting the test, administrators and proctors must be trained in the execution of their duties, as detailed in this Administration Procedures Guide. All personnel involved in the CPAT must be knowledgeable of the tasks and responsibilities of the administrators and the proctors.

A single individual within the fire department or the jurisdiction's administrative office must be responsible for CPAT Program. This individual makes decisions regarding cancellation, postponement, or rescheduling of the CPAT due to problems associated with weather, test props, test site, and support staff.

Adequate support personnel are required for successful administration of the CPAT. The CPAT is conducted with administrators and proctors. Administrators are responsible for the processing of candidates as they arrive at the CPAT site, collecting all forms and supporting rehabilitation after the CPAT. The proctors are responsible for processing candidates through the CPAT and monitoring test events.

PROCTOR TYPES

Two types of proctors are assigned to the test area: Event Proctors and Lead Proctors. Both are essential for proper and consistent administration of the CPAT. Proctors must not interfere with the candidate and are located in a safe position away from the candidate's movements at each event. After reviewing the following materials lead and event proctors should be able to:

- Assume the roles and responsibilities of lead and proctors.
- Read the instructions that must be given to every candidate.

- Fill out the scoring sheet properly.
- Use the timing mechanism and perform the start / stop procedures.
- Perform the requirements for when a candidate fails or quits.
- Produce the documentation requirements for each candidate.
- Communicate properly between event and lead proctors.
- Prevent the use of encouragement during the CPAT.
- Understand the need for consistency and accuracy when proctoring the CPAT.
- Know the warning and failure points of each event.
- Understand the limitations and purpose of lead proctors.
- Know the basic maintenance and reset of each event.

LEAD PROCTOR

The Lead Proctor is responsible for escorting and evaluating the candidate throughout the CPAT. The Lead Proctor must ensure that the candidate walks (i.e. one foot in contact with the ground at all times), follows lines between events and goes around designated corner traffic cones. If candidate does not go around traffic cone, the Lead Proctor must stop and instruct candidate to go around missed traffic cone. The Lead Proctor times the CPAT with a stopwatch and stops the test if a candidate runs out of time. The Lead Proctor sets the stopwatch to countdown from the pass/fail time of 10 minutes and 20 seconds. Two stopwatches will be used for the CPAT. This ensures scoring accuracy in case of mechanical timer failure. The second watch will be used only if there is a mechanical failure. The second stopwatch is maintained by the Lead Proctor. The stopwatches are started when the Event Proctor at Event 1 declares "START." The stopwatches are stopped when the Event Proctor at Event 8 declares "TIME."

The Lead Proctor reads verbal instructions to the candidate as the candidate progresses through the test. The Lead Proctor monitors and documents the warnings given by the Event Proctor. The Lead Proctor notifies the candidate and stops the CPAT when infractions, as declared by the Event Proctor, constitute test failure. At the conclusion of the CPAT, the Lead Proctor signs the CPAT Evaluation Form. The Lead Proctor also ensures that the candidate signs the CPAT Evaluation Form.

EVENT PROCTORS

Event Proctors are positioned at each event. They are responsible for ensuring that candidates perform events as prescribed by the Lead Proctor, declaring verbal warnings to candidates for infractions, providing for candidate safety, and resetting props to starting positions. Event Proctors must be positioned at the following locations.

EVENT 1 — STAIR CLIMB

- Number of Event Proctors required: Two

- Event Proctor Positions: One proctor located at the StepMill console and one at the base of the StepMill

- Event Proctor Responsibilities: The proctor ensures that the candidate safely mounts and dismounts the StepMill. The proctor declares the beginning of the warm-up period and the beginning of the timed CPAT. At the end of the warm-up period, the proctor states the word "START" to indicate the start of the timed CPAT. The proctor states the word "WARNING" if the candidate falls or dismounts during warm-up. After the timed CPAT begins, the proctor states the word "WARNING" if the candidate falls, grasps test equipment or dismounts the StepMill. The proctor also states the word "WARNING" if the wall or handrail is grasped or touched for an extended period of time or if the wall or handrail is used for weight bearing. The proctor informs the candidate when 10 seconds remain in the event so as to prepare the candidate for dismount. The proctors are responsible for removing shoulder weights when the candidate has completely dismounted the StepMill.

EVENT 2 — HOSE DRAG

- Number of Event Proctors required: Two

- Event Proctor Positions: One proctor located at the starting line and one proctor at the box where the candidate kneels and advances hose with hands.

- Event Proctor Responsibilities: The proctor located at the starting line ensures candidate grasps the hose/nozzle within the 8-foot mark. The proctor at starting line monitors the candidate dragging hoseline and states the word "WARNING" if the candidate fails to go around the drum or goes outside the marked path. The proctor located at the marked box ensures the candidate does not run through the marked box's boundary lines. The proctor located at marked box states the word "WARNING" if the candidate fails to keep the knee(s) that is in contact with the ground within marked boundary lines. The proctor located at marked box states the word "WARNING" if the candidate fails to keep at least one knee in contact with the ground. After the event, the proctors reset the event by placing the hose and nozzle behind the starting line in an accordion (Lazy-W) pattern.

EVENT 3 — EQUIPMENT CARRY

- Number of Event Proctors required: One

- Event Proctor Position: Proctor located at tool cabinet

- Event Proctor Responsibilities: The proctor ensures that saws are placed on the ground one at a time. The proctor ensures that both saws are placed on the ground prior to being returned one at time to the cabinet. If the candidate does not place saws on the ground or does not return the saws one at a time, the proctor will stop and instruct the candidate to do so. The proctor also ensures the candidate goes around the drum. The proctor states the word "WARNING" if either saw is dropped. The proctor also states the word "WARNING" if the candidate runs. After the event, the proctor resets the test props for the next candidate.

EVENT 4 — LADDER RAISE AND EXTENSION

- Number of Event Proctors required: One
- Event Proctor Position: Proctor located to side of ladder raise prop
- Event Proctor Responsibilities: During the ladder raise, the proctor states the word "WARNING" if the candidate misses a rung, if the candidate allows the ladder to fall to the ground, or if the safety lanyard is activated because the candidate releases the grip. During the ladder extension, the proctor states the word "WARNING" if the candidate does not remain within the marked boundary lines, does not maintain control of the ladder in a hand over hand manner, or lets the rope halyard slip in an uncontrolled manner. The proctor ensures that the ladders are fully raised and fully extended. After the event, the proctor resets ladders for the next candidate.

EVENT 5 — FORCIBLE ENTRY

- Number of Event Proctors required: One
- Event Proctor Position: Proctor located at forcible entry prop
- Event Proctor Responsibilities: The proctor states the word "WARNING" if the candidate steps inside the toe-box. The proctor states the word "WARNING" if the candidate does not maintain control of the sledgehammer and releases it from both hands while swinging. The proctor ensures that the candidate completes the event as verified by the signal alarm. After the event, the proctor resets the machine and places the sledgehammer in ready position.

EVENT 6 — SEARCH

- Number of Event Proctors required: One
- Event Proctor Position: Proctor located at beginning of search prop
- Event Proctor Responsibilities: The proctor is responsible for opening and closing the entrance cover. The proctor is responsible for opening the exit upon contact by the candidate. The proctor monitors/listens to the candidate as the candidate crawls through the maze. The proctor states the word "WARNING" if the candidate requests or needs assistance requiring the opening of the escape hatch or opening of the entrance/exit covers. The proctor also assists the candidate with exiting the search maze if the candidate calls out or raps sharply on the wall or ceiling. After the event, the proctor ensures that exit and entrance covers and hatches are fully closed.

EVENT 7 — RESCUE

- Number of Event Proctors required: One
- Event Proctor Position: Proctor located at starting line
- Event Proctor Responsibilities: The proctor ensures that the candidate uses the handles on the harness to drag the mannequin. The proctor states the word "WARNING" if the candidate grasps or rests on the drum. The proctor ensures that the candidate and mannequin go around the drum and mannequin completely crosses the line. After the event, the proctor resets the event by placing the mannequin with the head closest to starting line, hands to the side and legs extended.

EVENT 8 — CEILING BREACH AND PULL

- Number of Event Proctors required: Two
- Event Proctor Positions: Proctors located at ceiling breach and pull prop
- Event Proctor Responsibilities: The first proctor calls out the count (i.e. "ONE, TWO, THREE" / "ONE, TWO, THREE, FOUR, FIVE") for each full repetition. The first proctor calls out "MISS" if the candidate fails to complete a repetition. The first proctor ensures that all event sets are complete. The second proctor states the word "WARNING" if the candidate fails to remain inside of marked boundary lines or if the candidate drops the pike pole to ground. At the end of the last pull stroke repetition in the final set, the first proctor calls out "TIME" to indicate the end of the timed CPAT. After the event, the proctor resets the machine and places the pike pole in the ready position.

If the Lead Proctor stops the CPAT due to infractions at an event that constitute failure, the Event Proctor at that event must also sign the CPAT Evaluation Form.

TEST ADMINISTRATOR

The Test Administrator has overall responsibility during the individual candidate's test process. The Test Administrator ensures that candidates are presented all elements of the test in the same manner and that testing procedures are applied uniformly to all candidates. As candidates arrive at the test site, they must be properly checked-in by the Test Administrator. The administrator performs the following at check-in.

- Verify candidate identity. Complete sign-in form.
- Provide opportunity for candidates to view CPAT video.
- Distribute CPAT instruction document.
- Check each candidate for proper CPAT attire: shirt, long pants/sweats, footwear with closed toe and heel, and no watches or restrictive jewelry.
- Have candidate complete waiver and release form.

The Test Administrator is responsible for all forms required during the CPAT.

CPAT PROCTOR INSTRUCTIONS

The following instructions guide proctor actions and provide verbatim verbal instructions to be given to each candidate. For test consistency, each candidate must receive exactly the same instructions. It is important to read these same instructions to every candidate. Depending on the pace of the candidate, Lead Proctors may not finish reading the instructions. In such cases, Lead Proctors must continue to read the instructions while the candidate performs the event.

PRE-TEST

PROCTOR ACTIONS

Guide the candidate to the test site from the check-in/staging area. Have the candidate remove watch and other loose or restrictive jewelry. Assist the candidate with donning of hard hat with chin strap, weighted vest and gloves. Ensure this equipment fits properly. Place 12.5-pound weights on each shoulder of the candidate. Ensure the weights fit comfortably and weight is distributed properly over each shoulder.

LEAD PROCTOR VERBAL INSTRUCTION

This is a physically demanding test. If at any time you experience chest pain, dizziness, loss of balance or you are otherwise injured, you should notify me immediately. Upon notification I will stop the test, but only as requested by you.

You will wear a weighted vest, hard hat with chin strap, and a pair of gloves throughout the test. Be sure these items fit properly before beginning the test. It is your responsibility to notify me before the test begins if any item does not fit. You must not remove any of this equipment during the test. If your hard hat or gloves fall off you must put them back on before you proceed. In addition, extra weight will be applied to your shoulders during the first event and then removed by the proctors at the conclusion of that event.

This is a continuous test that consists of eight events. Between events you may walk fast but you must not run. If you run, I will stop you and give you a warning. You must follow the lines and go around the traffic cones. If you do not go around traffic cones, I will stop you and require you to go back around the missed cone. After each event, I will direct you to a line on the ground that you will follow to the next event. I will walk behind you and allow you to maintain your own pace. As you walk, listen to my instructions. While walking to each event, I will monitor you for safety and provide instructions for each event.

Two stopwatches will be used for the Candidate Physical Ability Test. This ensures scoring accuracy in case of mechanical timer failure. The second watch will be used only if there is a mechanical failure. The stopwatches will be set to the pass/fail time of 10 minutes and 20 seconds and will count down to 0 seconds. If you run out of time prior to completing the test, I will conclude the test. Do not ask me for your time during the test. It will not be given to you. Do you have any questions? Are you ready to begin?

EVENT 1 STAIR CLIMB

LEAD PROCTOR VERBAL INSTRUCTION

During the first event you will be given a 20-second warm up at a rate of 50 steps per minute. You may grasp the handrail or hold the wall to establish balance and cadence during the warm-up phase. If you dismount or fall off the StepMill during the warm-up, you will be immediately required to remount the StepMill and the 20-second warm-up will begin over. Once

the warm-up ends you will be notified that the test has begun and time is started.
You will walk on the StepMill for 3 minutes at a predetermined rate of 60 steps per minute. During the test you are permitted to touch the wall or handrail for balance only momentarily.

To prepare you for dismount, the proctor will inform you when you have reached the last ten seconds of the event. The proctor will advise you to grab the handrail and step down. I will direct you to a marked box and the additional weights will be removed. I will direct you to the next event.

EVENT PROCTOR ACTION

The Event Proctors remove the 12.5 pound weight from the candidate's shoulders after the candidate has dismounted completely from the StepMill.

MOVE TO NEXT EVENT PROCTOR BEGINS VERBAL INSTRUCTIONS.

EVENT 2 HOSE DRAG

LEAD PROCTOR VERBAL INSTRUCTIONS:

Follow the line. Running IS permitted during the hose drag. Pick up the nozzle and place the hose over your shoulder or across your chest. Drag the hose around the drum, while staying within the boundary lines. Do not run past the marked box's boundary. Within the marked box, drop to at least one knee and pull the hose until the hoseline mark crosses the line.

EVENT PROCTOR ACTION

The Event Proctor assigned to hose drag resets the event by placing the hose and nozzle behind the starting line in an accordion (Lazy-W) pattern.

MOVE TO NEXT EVENT. PROCTOR BEGINS VERBAL INSTRUCTIONS.

EVENT 3 EQUIPMENT CARRY

LEAD PROCTOR VERBAL INSTRUCTIONS

Follow the line. Running IS NOT permitted. Remove each saw one at a time and place them on the ground. Pick up both saws and walk around the drum. When you get back to the cabinet place both saws on the ground and then, one at a time, return the saws to the cabinet.

EVENT PROCTOR ACTION

The Event Proctor assigned to the equipment carry ensures that the saw props are placed in starting positions.

MOVE TO NEXT EVENT. PROCTOR BEGINS VERBAL INSTRUCTIONS.

EVENT 4 LADDER RAISE AND EXTENSION

LEAD PROCTOR VERBAL INSTRUCTIONS

Follow the line. Raise the ladder to the wall using each rung. When the ladder touches the building, step into the marked box of the secured ladder. Pull the rope until the ladder stops and lower it to the ground.

EVENT PROCTOR ACTION

The Event Proctor returns the ladders to starting positions.

MOVE TO NEXT EVENT. PROCTOR BEGINS VERBAL INSTRUCTIONS.

EVENT 5 FORCIBLE ENTRY

LEAD PROCTOR VERBAL INSTRUCTIONS

Follow the line. Pick up the sledgehammer and strike the target until you hear the buzzer. When you are done, place the sledgehammer on the ground.

EVENT PROCTOR ACTION

The Event Proctor resets prop and place the sledgehammer in the starting location.

MOVE TO NEXT EVENT. PROCTOR BEGINS VERBAL INSTRUCTIONS.

EVENT 6 SEARCH

LEAD PROCTOR VERBAL INSTRUCTIONS

Follow the line. You will crawl through a dark search maze. If at any time, and for any reason you choose to stop, call out or rap sharply on the wall or ceiling and you will be assisted out of the search maze.

EVENT PROCTOR ACTION

The Event Proctor returns the entrance and exit covers to the down position.

MOVE TO NEXT EVENT. PROCTOR BEGINS VERBAL INSTRUCTIONS.

EVENT 7 RESCUE

LEAD PROCTOR VERBAL INSTRUCTIONS

Follow the line. Drag the mannequin by the handles on the harness, go around the drum and back past the finish line.

EVENT PROCTOR ACTION

The Event Proctor returns the mannequin to the start position behind the starting line.

MOVE TO NEXT EVENT. PROCTOR BEGINS VERBAL INSTRUCTIONS.

EVENT 8 CEILING BREACH AND PULL

LEAD PROCTOR VERBAL INSTRUCTIONS

Follow the line. You will place the tip of the pike pole into the red area and push up three times. Then hook the bar and pull down five times. You must go all the way up and down or I will call out "MISS" and you must repeat the repetition. You must complete four sets of three pushes and five pulls

.

PROCTOR ACTIONS

The Lead Proctor stops the stopwatch when the Event Proctor declares "TIME" at the point when the candidate returns the pulling arm of the ceiling prop to the resting point.

CPAT ENDS

The Lead Proctor records the candidate time in minutes and seconds on the CPAT Evaluation Form. If the candidate fails any event or runs out of time, which results in the test's conclusion, the Lead Proctor records the failure and ensures that the Event Proctor at the failed event signs the form whether the candidate failed or passed. The Lead Proctor signs the CPAT Evaluation Form.

After the CPAT is completed, the Test Administrator escorts the candidate to the rehabilitation area. The Test Administrator ensures that the candidate, whether the candidate failed or passed, signs the CPAT Evaluation Form. Equipment is then removed. Vital signs should be taken if medically indicated and fluids should be provided. The candidate then completes the Rehabilitation Form.

CHAPTER 7
DATA COLLECTION

With the development of the *CPAT Administrator* software, employers now have a tool that will standardize support of the day to day key CPAT related functions. More importantly, the results of the mentoring, training and testing within the program can be collected, consolidated and reported in support of analyzing the goals effectiveness of the program.

The software provides for secure independent site administration of CPAT using common tools and resulting in a collection of CPAT test results from all participating licensee users. Key features of the software include:

- Security - authorize users and set roles to control their capabilities within the system
- Flexible role based use by all personnel in department involved in the recruiting and CPAT administrative functions
- Comprehensive support for:
  - Candidate information
  - Scheduling of all recruiting activities and special support for mentoring/training and CPAT Test
  - User friendly support for tracking candidate participation in CPAT
  - Mentoring/training events offered by the licensee management of the process
  - User friendly support for logging CPAT test results
  - Analysis reporting for CPAT test results with comparison to national results from all other participating licensees using CPAT Administrator system

While the use of *CPAT Administrator* is specifically required by all licensed users of the CPAT, there are significant benefits provided by this database program. The *CPAT Administrator* provides departments a tool designed to provide flexible administrative and operations support for the CPAT program. Most important, this tool ensures that the records are gathered for all CPAT Licensees in a manner that support the primary goals of the CPAT program, consistent and defensible training and testing of fire fighter candidates. Licensees can track the availability and participation of PFT trainers, manage candidates' personal information, and schedule all departmental events and CPAT tests.

Data collected through the CPAT Administrator will allow the EEOC to analyze the pass/fail rates of male and female candidates, and as such, it will allow a determination to be made on the effectiveness of all the mandatory modifications to the CPAT in eliminating or reducing the impact of this test on females. This data will be provided to EEOC in aggregate form and the identify of any particular employer and fire department from which the data was obtained will not be provided. Specifically, the data will only be provided in redacted format allowing, without any identifiers, the EEOC to assess the effectiveness of the CPAT modifications, as found and now required in this edition of the CPAT. ■

APPENDIX A
CPAT ORIENTATION & PRACTICE SESSION GUIDE

CPAT ORIENTATION & PRACTICE SESSION
The Candidate Physical Ability Test (CPAT) Orientation & Practice Session Guide is designed to assist your fire department with conducting CPAT orientations and practice sessions for candidates. The orientations will afford candidates the opportunity to view test events, talk with trainers, and physically examine each test component in a controlled setting. The practice sessions will allow candidates to complete a timed practice run of the test. The following items should be considered when conducting the CPAT orientations and practice sessions.

SCHEDULING
The first of the two orientations should be scheduled at least eight weeks prior to the actual CPAT. This allows adequate time for candidates to prepare physically for the actual test while also giving them sufficient time to arrange their schedules to attend. The second orientation can occur anywhere in the eight week period. The first practice run should be scheduled at least thirty days prior to the actual CPAT. This allows candidates to check the progress of their preparations. The second practice run can occur anywhere in the thirty day period. Candidates should be advised of their scheduled orientation times and places when they receive their notice for the actual CPAT. Candidates should be advised of their scheduled practice session times and places when they receive their first orientation.

VENUE SELECTION
If possible, orientations and practice sessions should be held in the same venue where the actual CPAT will be administered. The layout, ground surface, and test props should all be identical to those used in the actual test. This provides consistency from orientation and practice session to the actual test.

CLASSROOM ORIENTATION
During the classroom orientation, candidates should be shown the CPAT Orientation Video contained on this DVD, be given the CPAT Orientation Guide, and the CPAT Preparation Guide contained in appendix B. Candidates should be directed to review the test document to familiarize themselves with all elements of the test. The individual within your department responsible for actual CPAT administration should be present to answer questions relating to the administration of the test.

COURSE ORIENTATION
After the orientation, candidates move to the CPAT test events and view each test event performed by trainers. Candidates are also permitted to physically examine the test props at this time. Certified Peer Fitness Trainers, fitness professionals, and/or CPAT-trained fire fighters (proctors) shall familiarize all candidates with each task and apparatus, and shall advise all candidates concerning specific conditioning regimens and techniques to help them prepare for the CPAT.

SELECTION OF TRAINERS
Trainers performing the orientation should be peer fitness trainers who have experience in test administration. All trainers also must be trained in each event they will be assigned to demonstrate. In addition, trainers must be capable of presenting material in a logical and concise manner. Individuals selected as trainers should be required to attend a training session where each component of test administration is discussed prior to performing the duties of a trainer. Items covered during the training session include:

- Proper test attire
- Proper performance of test events
- Actions constituting warnings
- Failure points
- Timing of event
- Test prop specifications
- Fitness programs designed to strengthen muscles used in fire fighting

RESPONSIBILITIES OF TRAINERS
Trainers are responsible for reading, verbatim, the Lead Proctor Verbal Instruction (Chapter 6) for each event, demonstrating events, and discussing failure points for their selected event. Reading the verbal instructions will familiarize each candidate with what they will actually hear as they progress through all eight events.

Trainers should discuss fitness programs necessary to strengthen muscles for successful completion of the CPAT, academy training and a career in the fire service. The importance of maintaining a healthy lifestyle and a consistent fitness routine should be emphasized. As candidates are allowed to travel from event to event, trainers should provide fitness information that candidates can apply to that event to assist them in their physical preparation for the test. In addition, the CPAT Candidate Preparation Guide (Appendix B) should be distributed to each candidate.

Candidates must be allowed to view each test event in a timeframe that allows adequate exposure to the events. To avoid any perceived unfair advantage from one candidate to another, due to increased exposure to test events, the time spent viewing each event should be uniform and candidates organized in equal group numbers.

PRACTICE RUN

Departments have two options for practice sessions. Both options require the CPAT equipment to be laid out exactly as it would be during the actual CPAT. Departments can choose to fully staff and administer the CPAT as it would be on the actual test day. In this instance, candidates would be able to pass the CPAT during one of the practice sessions and hence not have to return on the official test day. In this scenario however it is important to note that a candidate who passes the CPAT during a practice session ***shall not*** be rank ordered ahead of any candidate who requires both practice sessions and the official test to pass the CPAT. The other option for departments is to minimally staff the practice session with enough personnel to time candidates and assist with resetting props. In this instance, all candidates would have to return for the official test. In either scenario, however, the fire department must ensure that, following each practice session, Certified Peer Fitness Trainers, fitness professionals, and/or CPAT-trained fire fighters (proctors) shall help the candidates understand the test elements and how they can improve their performance and conditioning.

CPAT ORIENTATION AND PRACTICE SESSION CHECKLIST

- ❑ View CPAT Orientation video if not seen previously.
- ❑ Review the roles and responsibilities of the lead proctor, including fitness requirements.
- ❑ Review the design and application of the CPAT evaluation form.
- ❑ Review the setting of the timers, the requirement of two timers, the starting procedure, the stopping procedure and the proper recording of time on the CPAT Evaluation Form.
- ❑ Review the importance of immediately stopping the candidate upon accrual of too many warnings or running out of time.
- ❑ Review CPAT Evaluation Form for signing requirements.
- ❑ Review the proper paper flow from sign in, to Lead Proctor, to test administrator.
- ❑ Review the necessity of the Lead Proctor to be paying attention to the Event Proctor to pick up on warnings being given and which warnings are being given.
- ❑ Review that Lead Proctor does not evaluate the candidate for warning infractions.
- ❑ Review the policy of no encouragement during the CPAT. Lead Proctors can only ask candidates if they want to end their test but they can not provide **any** encouragement.
- ❑ Review that candidates can not be assisted up if they fall but must get up on their own.
- ❑ Review the legal and ethical requirement that all candidates have the CPAT administered in the **exact** same fashion.
- ❑ Review the possibility of future litigation and the necessity that all paperwork be accurate.
- ❑ Review the Lead Proctor Verbal Instructions and when they must be read.
- ❑ Review the warnings and failures for each event. Review the proper positioning of Event Proctors for each event.
- ❑ Review the resetting of the props for each event. Review the maintenance that should be done on each prop.
- ❑ Run practice candidates through the CPAT including some candidates that make infractions and even fail or quit.

FIRE SERVICE JOINT LABOR MANAGEMENT WELLNESS-FITNESS INITIATIVE

CANDIDATE PHYSICAL ABILITY TEST, ORIENTATION & PRACTICE SESSION GUIDE

This candidate physical ability test (CPAT) consists of eight separate events. The CPAT is a sequence of events requiring you to progress along a predetermined path from event to event in a continuous manner. This test was developed to allow fire departments to obtain pools of trainable candidates who are physically able to perform essential job tasks at fire scenes. This is a pass/fail test based on a maximum total time of 10 minutes and 20 seconds.

As a condition of hire test, the fire department utilizing CPAT must ensure that all candidates are provided full and equal access to a CPAT orientation and practice program. The orientation and practice program must commence at least eight (8) weeks before commencement of the official CPAT test date. This program is composed of two phases.

The fire department will provide each candidate a full and equal opportunity to perform at least two (2) orientation sessions during which candidates will receive "hands-on" familiarity with the CPAT test equipment. These required orientation sessions will be provided by certified Peer Fitness Trainers, fitness professionals and/or CPAT-trained fire fighters (proctors). These individuals will familiarize each candidate with each CPAT task and the test equipment. They will advise all candidates concerning specific conditioning regimens and techniques to help each candidate prepare for the CPAT test.

The fire department will provide each candidate a full and equal opportunity to perform at least two (2) timed practice runs of the CPAT, using CPAT apparatus. These required practice runs must occur within thirty (30) days before the commencement of the official CPAT test dates. Following each practice session, certified Peer Fitness Trainers, fitness professionals, and/or CPAT-trained fire fighters (proctors) shall help the candidates understand the test elements and how they can improve their performance and conditioning.

This two-phased orientation and practice program is a mandatory condition for candidates taking the CPAT test. However, it is recognized that some individuals may be capable of passing CPAT without participation in these programs. These individuals may excuse themselves from this mandatory condition upon the receipt by the fire department of a written and signed waiver, acknowledging that the fire department made available these programs on an equal basis and that the candidate knowingly and voluntarily waived participation in the orientation and practice sessions.

In these events, you wear a 50-pound (22.68-kg) vest to simulate the weight of self-contained breathing apparatus (SCBA) and fire fighter protective clothing. An additional 25 pounds (11.34 kg), using two 12.5-pound (5.67-kg) weights that simulate a high-rise pack (hose bundle), is added to your shoulders for the stair climb event.

Throughout all events, you must wear long pants, a hard hat with chin strap, work gloves and footwear with no open heel or toe. Watches and loose or restrictive jewelry are not permitted.

All props were designed to obtain the necessary information regarding your physical ability. The tools and equipment were chosen to provide the highest level of consistency, safety and validity in measuring your physical abilities. A schematic drawing of the CPAT is included in this orientation material; however, the course layout may vary in order to conform to the fire department's test area. The events and distances between events are always the same.

The events are placed in a sequence that best simulates fire scene events while allowing an 85-foot (25.91-m) walk between events. To ensure the highest level of safety and to prevent exhaustion, no running is allowed between events. This walk allows you approximately 20 seconds to recover and regroup before each event. If you run between events you will receive one warning. A second infraction constitutes a disqualification, the test time is concluded and you fail the test.

To ensure scoring accuracy by eliminating timer failure, two stopwatches are used to time the CPAT. One stopwatch is designated as the official test time stopwatch, the second is the backup stopwatch. If mechanical failure occurs, the time on the backup stopwatch is used. The stopwatches are set to the pass/fail time and count down from 10 minutes and 20 seconds. If time elapses prior to the completion of the test, the test is concluded and you fail the test.

EVENT 1 STAIR CLIMB

EQUIPMENT

This event uses a StepMill stair climbing machine. The machine is positioned with one side up against a wall and an elevated proctor platform on the side opposite the wall. A single handrail on the wall side is available for you to grasp while mounting and dismounting the StepMill. Additional steps are placed at the base of the StepMill to assist you in mounting the StepMill.

PURPOSE OF EVALUATION

This event is designed to simulate the critical tasks of climbing stairs in full protective clothing while carrying a high-rise pack (hose bundle) and climbing stairs in full protective clothing carrying fire fighter equipment. This event challenges the candidate's aerobic capacity, lower body muscular endurance and ability to balance. This event affects the aerobic energy system as well as the following muscle groups: quadriceps, hamstrings, glutes, calves, and lower back stabilizers.

EVENT

During this event, the candidate is required to wear two 12.5-pound (5.67-kg) weights on the shoulders to simulate the weight of a high-rise pack (hose bundle). Prior to the initiation of the timed CPAT, the candidate has a 20-second warm-up on the StepMill at a set stepping rate of 50 steps per minute [Level 3]. During this warm-up period, the candidate is permitted to dismount, grasp the rail or hold the wall to establish balance and cadence. If the candidate falls or steps off the StepMill during the 20-second warm-up period, the candidate is required to remount the StepMill and restart the entire 20-second warm-up period. The candidate is allowed to restart the warm-up period twice. There is no break in time between the warm-up period and the actual timing of the test. The timing of the test begins at the end of this warm-up period when the proctor calls out "START." For the test, the candidate is required to walk on the StepMill at a set stepping rate of 60 steps per minute [Level 4] for 3 minutes. This concludes the event. The two 12.5-pound (5.67-kg) weights are removed from the candidate's shoulders. The candidate walks 85 feet (25.91 m) within the established walkway to the next event.

The following practices are allowed:

- The candidate is allowed to ***briefly*** touch the handrails or wall for balance
- The candidate is given up to two warnings for grabbing the handrails or bearing their body weight on the handrails / wall
- The candidate is allowed to restart the warm-up period twice

The following practices constitute a failure:

- The candidate falls or voluntarily dismounts the Step Mill three times during the warm up.
- The candidate falls or voluntarily dismounts the Step Mill after the start of the test.
- The candidate receives a third infraction for grasping the handrails or bearing weight on the handrails / wall after the start on the test.

Reasons for failure:

- Falling demonstrates poor balance or muscular endurance and could cause injury to the candidate.
- Using the handrails or wall for weight bearing gives the candidate a mechanical advantage that may not be available to them on the fire ground or demonstrates poor balance, conditioning or muscular endurance.

EVENT 2 - HOSE DRAG

EQUIPMENT

This event uses an uncharged fire hose with a hoseline nozzle. The hoseline is marked at 8 feet (2.24 m) past the coupling at the nozzle to indicate the maximum amount of hose you are permitted to drape across your shoulder or chest. The hoseline is also marked at 50 feet (15.24 m) past the coupling at the nozzle to indicate the amount of hoseline that you must pull into a marked boundary box before completing the test.

PURPOSE OF EVALUATION

This event is designed to simulate the critical tasks of dragging an uncharged hoseline from the fire apparatus to the fire occupancy and pulling an uncharged hoseline around obstacles while remaining stationary. This event challenges the candidate's aerobic capacity, lower body muscular strength and endurance, upper back muscular strength and endurance, grip strength and endurance, and anaerobic endurance. This event affects the aerobic and anaerobic energy systems as well as the following muscle groups: quadriceps, hamstrings, glutes, calves, lower back stabilizers, biceps, deltoids, upper back, and muscles of the forearm and hand (grip).

EVENT

During this event, the candidate grasps an automatic nozzle attached to 200 feet (60 m) of 1 3/4-inch (44-mm) hose. The candidate places the hoseline over the shoulder or across the chest, not exceeding the 8-foot (2.44-m) mark. The candidate is permitted to run during the hose drag. The candidate drags the hose 75 feet (22.86 m) to a prepositioned drum, makes a 90° turn around the drum and continues an additional 25 feet (7.62 m). The candidate then stops within the marked 5 foot x 7 foot (1.52 m x 2.13m) box, drops to at least one knee and pulls the hoseline until the hoseline's 50-foot (15.24-m) mark is across the finish line. During the hose pull, the candidate must keep at least one knee in contact with the ground and knee(s) must remain within the marked boundary lines. This concludes the event. The candidate walks 85 feet (25.91 m) within the established walkway to the next event.

The following practices are allowed:

- The candidate is given one warning to keep one knee down.
- The candidate is given one warning to keep the knees in bounds.
- The candidate is given one warning for taking one step out of the box.
- The candidate is permitted to run during the hose drag

The following practices constitute a failure:

- The candidate fails to go around the drum.
- The candidate travels outside of the marked path.
- The candidate takes two steps out of the back of the box
- The candidate receives a second infraction for not keeping one knee in contact with the ground.
- The candidate receives a second infraction for the knees being outside of the marked boundary.

Reasons for failure:

- Running beyond the marked path gives the candidate a mechanical advantage by decreasing the distance required to pull the hose by hand. This advantage may not be available on the fire ground. This demonstrates a lack of upper body strength by using lower body strength to compensate.
- By not keeping their knee on the floor a candidate could compensate for a deficiency in grip and upper body strength by standing up.

EVENT 3 EQUIPMENT CARRY

EQUIPMENT

This event uses two saws and a tool cabinet replicating a storage cabinet on a fire truck.

PURPOSE OF EVALUATION

This event is designed to simulate the critical tasks of removing power tools from a fire apparatus, carrying them to the emergency scene and returning the equipment to the fire apparatus. This event challenges the candidate's aerobic capacity, upper body muscular strength and endurance, lower body muscular endurance, grip endurance, and balance. This event affects the aerobic energy system as well as the following muscle groups: biceps, deltoids, upper back, trapezius, muscles of the forearm and hand (grip), glutes, quadriceps, and hamstrings.

EVENT

During this event, the candidate removes the two saws from the tool cabinet, one at a time, and places them on the ground. The candidate then picks up both saws, one in each hand, and carries them while walking 75 feet (22.86 m) around the drum, then back to the starting point. The candidate is permitted to place the saw(s) on the ground and adjust the grip. Upon return to the tool cabinet, the candidate places both saws on the ground, then picks up each saw one at a time, and replaces the saw in the designated space in the cabinet. This concludes the event. The candidate walks 85 feet (25.91 m) within the established walkway to the next event.

The following practice is allowed:

- The candidate is given one warning for running.
- The candidate is allowed to set the tools on the ground to adjust and re-establish the grip.

The following practices constitute a failure:

- The candidate drops either saw during the carry.
- The candidate receives a second infraction for running with the saws.

Reasons for failure:

- Dropping the saws could injure the candidate and demonstrates poor grip strength or muscular endurance.
- Running with saws could cause injury if the candidate trips.

EVENT 4 LADDER RAISE AND EXTENSION

EQUIPMENT

This event uses two 24-foot (7.32-m) fire department ladders. For your safety, a retractable lanyard is attached to the ladder that you raise.

PURPOSE OF EVALUATION

This event is designed to simulate the critical tasks of placing a ground ladder at a fire structure and extending the ladder to the roof or window. This event challenges candidate's aerobic capacity, upper body muscular strength, lower body muscular strength, balance, grip strength, and anaerobic endurance. This event affects the aerobic and anaerobic energy systems as well as the following muscle groups: biceps, deltoids, upper back, trapezius, muscles of the forearm and hand (grip), glutes, quadriceps, and hamstrings.

EVENT

During this event, the candidate walks to the top rung of the 24-foot (7.32-m) aluminum extension ladder, lifts the first rung at the unhinged end from the ground, and walks it up until it is stationary against the wall. This must be done in a hand over hand fashion, using each rung until the ladder is stationary against the wall. The candidate must not use the ladder rails to raise the ladder. The candidate immediately proceeds to the pre-positioned and secured 24-foot (7.32-m) aluminum extension ladder, stands with both feet within the marked box of 36 inches x 36 inches (91.44 cm x 91.44 cm) and extends the fly section hand over hand until it hits the stop. The candidate then lowers the fly section hand over hand in a controlled fashion to the starting position. This concludes the event. The candidate walks 85 feet (25.91 m) within the established walkway to the next event.

The following practices are allowed:

- The candidate is given one warning for missing any rung during the raise.
- The candidate is given one warning for a boundary violation during the ladder extension.

The following practices constitute a failure:

- The candidate receives a second infraction for missing any rung during the raise.
- The candidate allows the ladder to fall to the ground during the raise.
- The candidate releases their grip on the ladder and the safety lanyard activates.
- The candidate receives a second infraction for not remaining within the marked boundary during the ladder extension.
- The candidate does not control the halyard in a hand over hand manner.
- The candidate allows the halyard to slip in an uncontrolled manner.

Reasons for failure:

- Skipping rungs would give a taller candidate an advantage over a shorter candidate and is therefore not permitted. It would also allow the candidate to throw the ladder up in the air which is both unsafe and unavailable to the candidate at a fire scene when the base of the ladder is not hinged to the ground.
- Failure to completely raise the ladder demonstrates poor grip and muscular strength.
- A candidate could gain an advantage by walking the halyard backward to compensate for poor upper body strength. This compensation is not available on the fire ground where the ladder is not bolted to the fire structure.
- Failure to control the ladder indicates poor grip strength as well as muscular strength and endurance.

EVENT 5 FORCIBLE ENTRY

EQUIPMENT

This event uses a mechanized device located 39 inches (1 m) off the ground that measures cumulative force and a 10-pound (4.54-kg) sledgehammer.

PURPOSE OF EVALUATION

This event is designed to simulate the critical tasks of using force to open a locked door or to breach a wall. This event challenges the candidate's aerobic capacity, upper body muscular strength and endurance, lower body muscular strength and endurance, balance, grip strength and endurance, and anaerobic endurance. This event affects the aerobic and anaerobic energy systems as well as the following muscle groups: quadriceps, glutes, triceps, upper back, trapezius, and muscles of the forearm and hand (grip).

EVENT

During this event, the candidate uses a 10-pound (4.54-kg) sledgehammer and strikes the measuring device in the target area until the buzzer signal is activated. The candidate's feet must remain outside the toe-box. After the buzzer is activated, the candidate places the sledgehammer on the ground. This concludes the event. The candidate walks 85 feet (25.91 m) within the established walkway to the next event.

The following practice is allowed:

- The candidate is given one warning for stepping inside the toe-box.

The following practices constitute a failure:

- The candidate fails to maintain control of the hammer while swinging.
- The candidate receives a second infraction for stepping inside the toe-box.

Reason for failure:

- Failure to maintain control of the hammer indicates poor grip strength and muscular endurance and could cause injury to the candidate and proctors.

EVENT 6 SEARCH

EQUIPMENT

This event uses an enclosed search maze that has obstacles and narrowed spaces.

PURPOSE OF EVALUATION

This event is designed to simulate the critical task of searching for a fire victim with limited visibility in an unpredictable area. This event challenges the candidate's aerobic capacity, upper body muscular strength and endurance, agility, balance, anaerobic endurance, and kinesthetic awareness. This event affects the aerobic and anaerobic energy systems as well as the following muscle groups: muscles of the chest, shoulder, triceps, quadriceps, abdominals, and lower back.

EVENT

During this event, the candidate crawls on hands and knees through a tunnel maze that is approximately 3 feet (91.44 cm) high, 4 feet (121.92 cm) wide and 64 feet (19.51 m) in length with two 90° turns. At a number of locations in the tunnel, the candidate navigates around, over and under obstacles. In addition, at two locations, the candidate crawls through a narrowed space where the dimensions of the tunnel are reduced. The movement is monitored/listened to as the candidate advances through the maze. If for any reason, the candidate chooses to end the event, the candidate calls out or raps sharply on the wall or ceiling and the candidate is then assisted out. Upon exit from the maze, the event is concluded. The candidate walks 85 feet (25.91 m) within the established walkway to the next event.

The following practices are allowed:

- The candidate can return into the tunnel if they exit through the entrance.

The following practices constitute a failure:

- The candidate requests assistance from the proctor requiring the opening of an escape hatch or the entrance/exit covers.

Reasons for failure:

- Failure to finish the event indicates a lack of confidence in dark or confined spaces.

EVENT 7 RESCUE

EQUIPMENT

This event uses a weighted mannequin equipped with a harness with shoulder handles.

PURPOSE OF EVALUATION

This event is designed to simulate the critical task of removing a victim or injured partner from a fire scene. This event challenges the candidate's aerobic capacity, upper and lower body muscular strength and endurance, grip strength and endurance, and anaerobic endurance. This event affects the aerobic and anaerobic energy systems as well as the following muscle groups: quadriceps, hamstrings, glutes, abdominals, torso rotators, lower back stabilizers, trapezius, deltoids, latissimus dorsi, biceps, and muscles of the forearm and hand (grip).

EVENT

During this event, the candidate grasps a 165-pound (74.84-kg) mannequin by the handle(s) on the shoulder(s) of the harness (either one or both handles are permitted), drags it 35 feet (10.67 m) to a pre-positioned drum, makes a 180° turn around the drum, and continues an additional 35 feet (10.67 m) to the finish line. The candidate is not permitted to grasp or rest on the drum. It is permissible for the mannequin to touch the drum. The candidate is permitted to lower the mannequin to the ground to adjust their grip. The entire mannequin must be dragged past the marked finish line. This concludes the event. The candidate walks 85 feet (25.91 m) within the established walkway to the next event.

The following practices are allowed:

- The candidate receives one warning for grabbing or resting on the drum.
- The candidate is permitted to grab either one or both handles when dragging the mannequin
- The candidate is permitted to lower the mannequin to the ground to adjust their grip

The following practices constitute a failure:

- The candidate receives a second infraction for grabbing or resting on the drum.

Reasons for failure:

- Use of the drum by either grasping or resting on it indicates a lack of muscular strength and endurance.

EVENT 8 CEILING BREACH AND PULL

EQUIPMENT

This event uses a mechanized device that measures overhead push and pull forces and a pike pole. The pike pole is a commonly used piece of equipment that consists of a 6-foot long pole with a hook and point attached to one end.

PURPOSE OF EVALUATION

This event is designed to simulate the critical task of breaching and pulling down a ceiling to check for fire extension. This event challenges the candidate's aerobic capacity, upper and lower body muscular strength and endurance, grip strength and endurance, and anaerobic endurance. This event affects the aerobic and anaerobic energy systems as well as the following muscle groups: quadriceps, hamstrings, glutes, abdominals, torso rotators, lower back stabilizers, deltoids, trapezius, triceps, biceps, and muscles of the forearm and hand (grip).

EVENT

During this event, the candidate removes the pike pole from the bracket, stands within the boundary established by the equipment frame, and places the tip of the pole on the painted area of the hinged door in the ceiling. The candidate fully pushes up the 60-lb hinged door in the ceiling with the pike pole three times. The candidate then hooks the pike pole to the 80-lb ceiling device and pulls the pole down five times. Each set consists of three pushes and five pulls. The candidate repeats the set four times. The candidate is permitted to stop and, if needed, adjust the grip. Releasing the grip or slipping from pike pole handle, without the pike pole falling to ground, does not result in a warning or constitute a failure. The candidate may re-establish the grip and resume the event. If the candidate does not successfully complete a repetition (i.e. complete the up and down motion), the proctor calls out "MISS" and the candidate must push or pull the apparatus again to complete the repetition. The event and the total test time ends when the applicant completes the final pull stroke repetition as indicated by the proctor who calls out "TIME".

The following practices are allowed:

- The candidate receives one warning for dropping the pike pole on the ground.
- The candidate receives one warning for stepping out of bounds.
- The candidate is permitted to stop and to re-establish grip

The following practices constitute a failure:

- The candidate receives a second infraction for stepping outside of the boundary marked by the testing apparatus.
- The candidate receives a second infraction for dropping the pike pole.

Reasons for failure:

- Stepping out of bounds creates an advantage that may not be available to the candidate on the fire ground, which would allow the candidate to compensate for poor upper body strength
- Failure to maintain control of the pike pole indicates poor grip strength and muscular endurance.

TEST FORMS

You must present valid identification and sign a number of forms before taking the CPAT. Prior to the start of the CPAT you must complete the Sign-in Form. You are provided an opportunity to review a video detailing the CPAT and the failure points. It is your responsibility to ask questions if you do not understand any parts of the test events or procedures. You are required to complete the Waiver and Release Form. At the conclusion of the CPAT, you must sign the CPAT Evaluation Form. Additionally, prior to leaving the rehabilitation area, you must complete and sign the Rehabilitation Form. If you fail to complete and sign any of these forms you fail the CPAT. ■

CPAT COURSE LAYOUT EXAMPLE

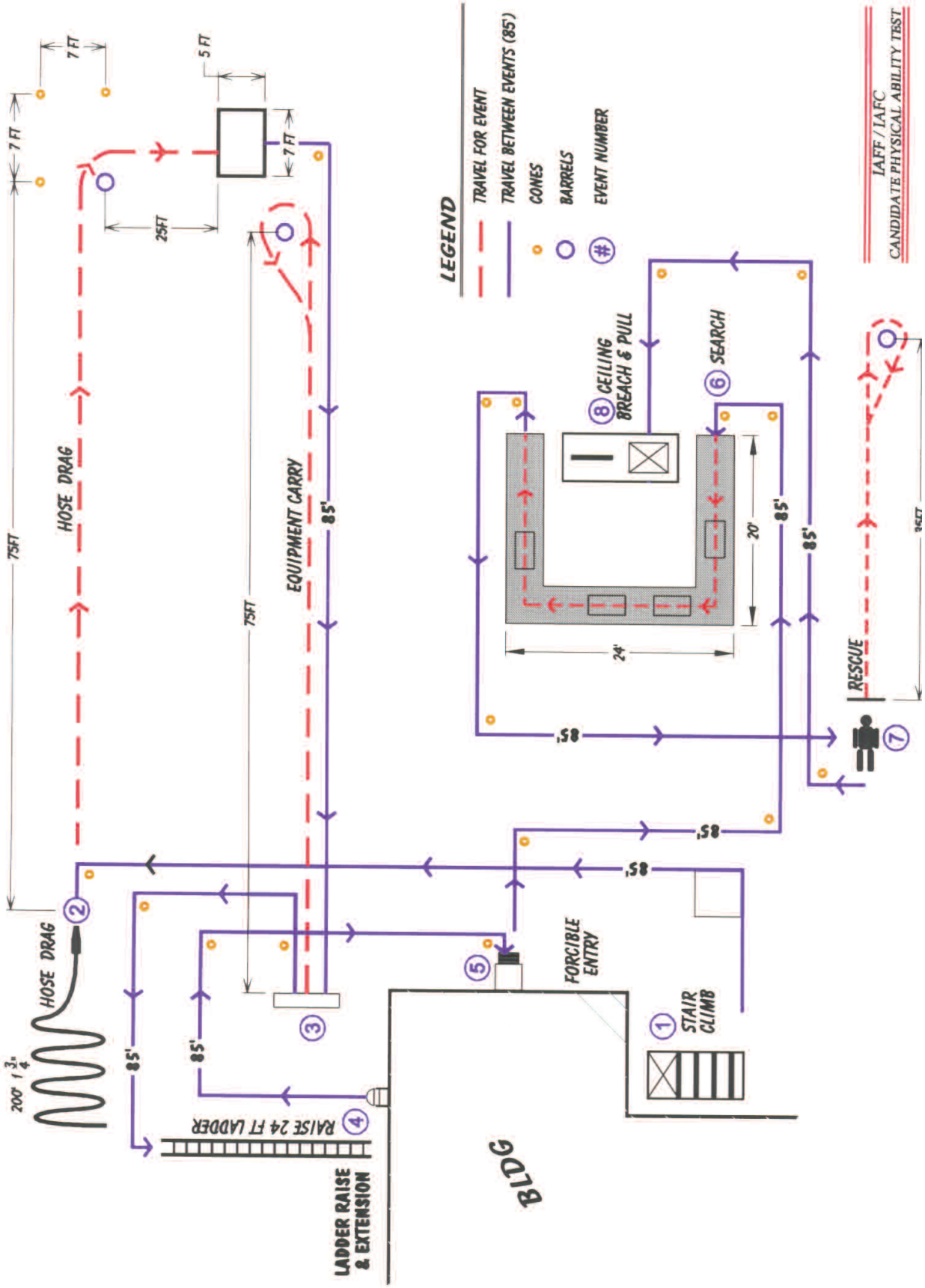

APPENDIX B
CPAT CANDIDATE PREPARATION GUIDE

The job of a fire fighter is one of the most physically demanding jobs in North America. It requires high levels of cardiopulmonary endurance, muscular strength and muscular endurance. The Candidate Physical Ability Test consists of eight critical physical tasks that simulate actual job duties on the fireground. This test is physically demanding and requires that you be physically fit to be successful. This guide was developed to assist you with physically preparing yourself for the test.

■ What is physical fitness in the Fire Service?

Physical fitness is the ability to perform physical activities, such as job tasks, with enough reserve for emergency situations and to enjoy normal activities when off duty.

■ What are the major areas of fitness?

The major areas of physical fitness include:
- flexibility
- cardiopulmonary endurance
- muscular strength
- muscular endurance

Body composition is also considered an area of physical fitness. It should be noted that excess body fat increases the workload placed upon the body and decreases the body's ability to dissipate heat.

A proper physical fitness program should be specific for the job of a fire fighter. It should include all of the major areas of physical fitness mentioned above and be a total body program. Although this is best accomplished at a gym with an array of equipment, this guide also includes exercises that require little or no equipment.

■ Hydration

Proper hydration is critical. All candidates should drink water before exercise, during exercise and after exercise. Additionally, you should drink at least one liter of water one hour before your CPAT.

■ Warm-up & Flexibility

A warm-up serves several functions, including:
- increased blood flow to working muscles and joints
- decreased likelihood of injury
- decrease in pre-event tension
- possible improved performance
- improved flexibility

A proper warm-up should begin with a few of minutes of the same type of activity you are about to do at a very light exertion level. For example, if you are preparing to go running you should run in place or for a short distance at a very easy pace.

The next step is to stretch to improve flexibility and further your warm-up. There are two phases of stretching. The first phase is the easy stretch. In this phase, you should hold the stretch for 10 seconds in a range of motion that produces only mild tension. This prepares you for the second phase, the developmental stretch. In this phase, you should move slightly farther to the point where you feel a little more tension. This should be held for another 10 seconds.

■ Flexibility

When stretching follow these basic rules:
- Stretch slowly
- No bouncing
- No pain
- Stretching is not competitive
- Breathe slowly to help you relax
- Stretching should feel good

1. Knee to Chest
Glutes, Low Back, Hamstrings, Quadriceps
- Lay flat on back with knees bent.
- Grab under right thigh and pull knee toward chest until you feel mild tension.
- Hold for 10 seconds, then pull slightly farther until you feel slightly more tension.

- Hold this position for 10 seconds.
- Repeat with other leg.
- Repeat sequence 2 or 3 times.

2. Knee to Chest - Leg Straight
Glutes, Low Back, Hamstrings, Quadriceps

- Lay flat on back with knees bent.
- Grab under right thigh and straighten right leg. Do not lock knee.
- Hold for 10 seconds, then pull slightly farther until you feel slightly more tension.
- Hold this position for 10 seconds.

- Repeat with other leg.
- Repeat sequence 2 or 3 times.

3. Knee to Chest — Diagonal
Glutes, Low Back, Hamstrings, Quadriceps, Piriformis

- Lay flat on back with knees bent.
- Grab under right thigh and pull right knee toward left chest until you feel mild tension.
- Hold for 10 seconds, then pull slightly farther until you feel slightly more tension.
- Hold this position for 10 seconds.
- Repeat with other leg.
- Repeat sequence 2 or 3 times.

4. Leg Cross
Piriformis, Glutes, Low Back

- Lay flat on back with knees bent.
- Place your right outer ankle on the top of right left thigh.
- Grab under left thigh and pull left knee toward chest until you feel mild tension.
- Hold for 10 seconds, then pull slightly farther until you feel slightly more tension.
- Hold this position for 10 seconds.
- Repeat with other leg.
- Repeat sequence 2 or 3 times

5. Side Quadricep Stretch
Quadriceps, Hip Flexors, Abdominals

- Lay on left side.
- Grab right shin, just above your right ankle.
- Slowly pull right foot toward right buttocks while pushing right hip forward.
- At the same time, push right hip forward.
- Hold for 10 seconds, and then pull slightly farther until you feel slightly more tension.
- Hold this position for 10 seconds.
- Repeat with other leg.
- Repeat sequence 2 or 3 times.

6. Butterfly Stretch
Groin, Low Back

- Sit upright with the bottoms of feet touching each other.
- Bend forward at the waist to a position where you feel mild tension.
- Elbows can be used to push down on thighs if you want more stretch.
- Hold for 10 seconds, then pull slightly farther until you feel slightly more tension.
- Hold this position for 10 seconds.
- Repeat sequence 2 or 3 times.

7. Straddle Stretch
Groin, Hamstrings, Low Back

- Sit upright with legs straight.
- Spread legs as far as you can comfortably can.
- Keeping legs straight, but not locking knees, bend forward at the waist.
- Hold for 10 seconds then push down slightly farther until you feel slightly more tension.
- Hold this position for 10 seconds.
- Return to starting position.
- Repeat sequence, but this time take chest toward left knee.
- Return to the starting position and repeat sequence toward right knee.
- Repeat entire sequence 2 or 3 times.

8. Cross Over Stretch
Glutes, Iliotibial Band

- Sit with legs straight in front of you.
- Bend right leg and cross it over so you can grab around the outside of right thigh.
- Slowly pull bent right leg toward chest until you feel mild tension.
- Hold for 10 seconds then push slightly farther until you feel slightly more tension.
- Hold this position for 10 seconds.
- Return to starting position and switch legs.
- Repeat sequence on opposite leg.
- Repeat sequence 2 or 3 times.

■ **9. Calf Stretch**
Calves

- Squat down on ground with right foot slightly in front of left.
- Grasp right shin and rock forward until you feel mild tension.
- Hold for 10 seconds, then push slightly farther until you feel slightly more tension.
- Hold this position for 10 seconds.
- Repeat sequence on opposite leg.
- Repeat sequence 2 or 3 times.

■ **10. Upper Back Stretch**
Upper back, Posterior Deltoids

- Sit with legs straight in front.
- Twist your upper back crossing left arm across chest and place right hand on the floor.
- Slowly twist until you feel mild tension.
- Hold for 10 seconds, then twist slightly farther until you feel slightly more tension.
- Hold this position for 10 seconds.
- Return to starting position and twist to the left side.
- Repeat sequence 2 or 3 times.

■ **11. Chest Stretch**
Chest, Shoulders, Biceps

- Stand with right shoulder against a wall.
- Place right palm on the wall.
- Slowly turn your body away from the wall until you feel mild tension.
- Hold for 10 seconds, then twist slightly farther until you feel slightly more tension.
- Return to starting position and repeat sequence with left arm.
- Repeat sequence 2 or 3 times.

■ **12. Triceps Stretch**
Triceps, Posterior Deltoids

- Stand upright and extend right arm over head.
- Grab right elbow with left hand and place right hand on right shoulder blade.
- Slowly push right elbow backward until mild tension is felt.
- Hold for ten seconds, then push slightly farther until you feel slightly more tension.
- Return to starting position and repeat sequence with left arm.
- Repeat sequence 2 or 3 times.

■ **13. Forearm Stretch**
Forearms

- Stand upright and grab right fingers with left hand.
- Slowly fold right wrist backwards until mild tension is felt.
- Hold for ten seconds, then push slightly farther until you feel slightly more tension.
- Repeat sequence, this time folding wrist forwards.
- Return to starting position and repeat sequence with left arm.
- Repeat entire sequence 2 or 3 times.

General Principles of Exercise

To maximize the results from your training program, several exercise principles should be understood.

■ **Adaptation**
Adaptation means that the body can adjust to any overload as long as it is done in small increments. The amount of progress the body can make depends on adequate rest, consistency of workouts, adequate nutrition, and genetic makeup.

■ **Overload**
Overload, in exercise training programs, means that a training program causes the body to adapt only when the demands are greater than what the body is accustomed to doing. This does not mean that the overload is greater than your maximum; rather overload is generally greater than 75% of your maximal effort.

■ **Progression**
The principle of progression states that as the body adapts to the exercise program you must gradually increase the overload to continue to adapt. It is critical that all progressions are gradual and small in nature to prevent over loading the body's ability to recover.

■ **Specificity**
Specificity of training is the principle that your body will adapt to whatever exercises you perform. This means that if you only perform bench presses, your body will not adapt to sit-ups. It may, therefore, be beneficial for you to alter your training to prepare for the Candidate Physical Ability Test.

Over-Training

Over-training addresses the body's need for adequate rest and nutrition following exercise to recuperate before the next exercise session. If recuperation is not adequate, over-training will occur. Signs of over training include: increased injury rate, increased resting heart rate, muscle soreness that does not subside after 48 hours, apathy, insomnia, loss of appetite, lack of adaptation to exercise, and loss of strength. Over-training must be avoided.

Balance

When developing a strength training program, it is important to balance muscle development by including exercises that train all major muscles groups of the body. This means that if the chest is trained so must the back; similarly if the upper body is trained so must the legs. When this principle is not followed, joints become imbalanced, and injuries occur.

Cardiopulmonary Endurance Program

Cardiopulmonary endurance is the ability of the cardiovascular and respiratory systems to deliver oxygen to working muscles. It consists of both aerobic and anaerobic energy systems.

Aerobic Fitness

During aerobic activities, the intensity of the exercise is low enough for the cardiopulmonary system to meet the oxygen demands of the working muscles. Aerobic activities include bicycling, hiking, swimming, climbing stairs, and running when performed at a low enough intensity.

Anaerobic Fitness

During anaerobic activities, the intensity of exercise is so high that the working muscle's demands for oxygen exceed the cardiopulmonary system's ability to deliver it. Because adequate oxygen is not available, waste products accumulate. This type of intense activity can only be short in duration. An example of an anaerobic activity is sprinting.

The CPAT Training Program

The CPAT Training program consists of two training programs. The first program is the aerobic training program and the interval program. Both of these programs complement each other and improve your aerobic and anaerobic fitness specific to the Candidate Physical Ability Test.

Aerobic Training

The cardiopulmonary endurance program should begin at a level that is considered "moderately difficult" but not "difficult." Your intensity should not be so high that you cannot speak during the exercise. The program below consists of a series of progressive levels. As you adapt to each step, you should move up to the next level. This program should be done 3 to 5 days per week.

Interval Training

Interval training involves a repeated series of exercise activities interspersed with rest or relief periods. This is an excellent tool for improving both aerobic and anaerobic endurance. In this program running intervals are performed on Tuesdays and Thursdays. It is important that interval days have at least one day of slow easy running between them. This provides the recovery necessary to prevent over training.

Phase One

	Monday	Tuesday	Wednesday	Thursday	Friday
Level1	Run 1 mile at an easy pace. Be able to talk the entire time.	Run 30 seconds at a somewhat hard pace then walk for 30 seconds. Repeat this for a total of 1 mile.	Run 1 mile at an easy pace. Be able to talk the entire time.	Run 30 seconds at a somewhat hard pace then walk for 30 seconds. Repeat this for a total of 1 mile.	Run 1 mile at an easy pace. Be able to talk the entire time.
Level2	Run 1.5 miles at an easy pace. Be able to talk the entire tim.	Run 30 seconds at a somewhat hard pace then walk for 30 seconds. Repeat this for a total of 1.5 miles.	Run 1.5 miles at an easy pace. Be able to talk the entire time.	Run 30 seconds at a somewhat hard pace then walk for 30 seconds. Repeat this for a total of 1.5 miles.	Run 1.5 miles at an easy pace. Be able to talk the entire time.
Level3	Run 2 miles at an easy pace. Be able to talk the entire time.	Run 60 seconds at a somewhat hard pace then walk for 60 seconds. Repeat this for a total of 2 miles.	Run 2 miles at an easy pace. Be able to talk the entire time.	Run 60 seconds at a somewhat hard pace then walk for 60 seconds. Repeat this for a total of 2 miles.	Run 2 miles at an easy pace. Be able to talk the entire time.
Level 4	Run 2.5 miles at an easy pace. Be .able to talk the entire time.	Run 60 seconds at a somewhat hard pace then walk for 60 seconds. Repeat this for a total of 2.5 miles.	Run 2.5 miles at an easy pace. Be able to talk the entire time.	Run 60 seconds at a somewhat hard pace then walk for 60 seconds. Repeat this for a total of 2.5 miles.	Run 2.5 miles at an easy pace. Be able to talk the entire time.
Level 5	Run 3 miles at an easy pace. Be able to talk the entire time.	Run 90 seconds at a somewhat hard pace then walk for 90 seconds. Repeat this for a total of 3 miles.	Run 3 miles at an easy pace. Be able to talk the entire time.	Run 90 seconds at a somewhat hard pace then walk for 90 seconds. Repeat this for a total of 3 miles.	Run 3 miles at an easy pace. Be able to talk the entire time.

Phase Two

	Monday	Tuesday	Wednesday	Thursday	Friday
Level1	Run 3 miles at an easy pace. Be able to talk the entire time.	Run at an easy pace for 3 minutes then run stairs moderately hard for 1 minute.	Run 1.5 miles at an easy pace.	Run at an easy pace for 3 minutes then run stairs moderately hard for 1 minute.	Run 3 miles at an easy pace. Be able to talk the entire time.
Level2	Run 3 miles at an easy pace. Be able to talk the entire time.	Run at an easy pace for 3 minutes then run stairs moderately hard for 90 seconds.	Run 1.5 miles at an easy pace.	Run at an easy pace for 3 minutes then run stairs moderately hard for 90 seconds.	Run 3 miles at an easy pace. Be able to talk the entire time.
Level3	Run 3 miles at an easy pace. Be able to talk the entire time.	Run at an easy pace for 3 minutes then run stairs moderately hard for 2 minutes.	Run 1.5 miles at an easy pace.	Run at an easy pace for 3 minutes then run stairs moderately hard for 2 minutes.	Run 3 miles at an easy pace. Be able to talk the entire time.
Level 4	Run 3 miles at an easy pace. Be able to talk the entire time.	Run at an easy pace for 3 minutes then run stairs moderately hard for 2 minutes and 30 seconds.	Run 1.5 miles at an easy pace.	Run at an easy pace for 3 minutes then run stairs moderately hard for 2 minutes and 30 seconds.	Run 3 miles at an easy pace. Be able to talk the entire time.
Level 5	Run 3 miles at an easy pace. Be able to talk the entire time.	Run at an easy pace for 3 minutes then run stairs moderately hard for 3 minutes.	Run 1.5 miles at an easy pace.	Run at an easy pace for 3 minutes then run stairs moderately hard for 3 minutes.	Run 3 miles at an easy pace. Be able to talk the entire time.

Muscular Strength/Endurance Program

This is a resistance program designed to improve your total body strength and endurance. This is not a bodybuilding or a power-lifting program. It is designed to prepare you specifically for the Candidate Physical Ability Test. If you are not familiar with lifting programs, have any joint pain or feel uncomfortable performing these exercises, you should seek the advice of a professional trainer.

This program is designed to be performed three days a week. This means that you will not be lifting 4 days a week. These rest days are just as important as your workout days. A critical mistake made by some applicants is over training when preparing for the Candidate Physical Ability Test. If you feel you are over training, refer back to the exercise principles, slow down your progression, reduce your overload, and allow for adequate rest between workouts.

This workout should follow the previously mentioned warm-up and stretching program. This program is designed to be a circuit workout. Circuit training has been proven to be a very effective and efficient way to improve muscular strength, muscular endurance and cardiovascular endurance. Once you begin this workout, you will lift at each station for 10 repetitions and then move on to the next exercise. Rest between exercises should not exceed 30 seconds unless you are experiencing some discomfort. For safety purposes, it is recommended that you lift with a partner and spot each other when necessary.

General Safety Tips While Performing Resistance Training

- Always lift with a partner.
- Ask for help from an expert if you don't know what you are doing.
- Progress slowly to avoid injuries.
- Never show off by attempting to lift more weight than you normally lift.
- Use proper lifting technique when lifting weight plates and dumbbells.
- Never drink alcohol or take medications that may cause drowsiness prior to lifting weights.
- Do not lift too quickly; always control the weights.
- Always use strict form. Proper technique is more important than the amount of weight lifted.
- Keep head in a neutral position, looking straight ahead and not upwards or downwards.

Progression

Unless you are an experienced weightlifter, it is recommended that you begin by doing one complete cycle through this circuit. After the first week, if you are not still getting muscle soreness 24 to 48 hours after your workouts, you can progress to two cycles through the circuit. After the second week, if you are not still getting muscle soreness 24 to 48 hours after your workouts, you can progress to three cycles through the circuit. Although it is not critical, it is recommended that you follow the exercises in order. If, after progressing to the next level, you feel very sore, you many want to decrease the weights and the number of times you complete the circuit.

Weight Training Circuit Workout

1. Seated Leg Press

Quadriceps, Hamstrings, Glutes, Calves

CPAT Events: Stair Climb, Hose Drag, Ladder Raise, Forcible Entry, Rescue, Ceiling Breach and Pull

Set appropriate weight to overload above muscles but not so heavy as to cause injury or failure.

- Place feet flat on push platform about shoulder width apart and toes pointed slightly outward.
- Adjust seat so knees are flexed at 90 degrees.
- Push weight up while exhaling.
- Stop just short of locking your knees.
- Keep knees in alignment with feet.
- Keep head in neutral position.

2. DB Military Press

Deltoids, Triceps, Trapezius

CPAT Events: Ladder Raise, Search, Ceiling Breach and Pull

Pick appropriate weight to overload above muscles but not so heavy as to cause injury or failure.

- Raise two dumbbells to height of shoulders.
- With palms facing forward, alternate pressingeach dumbbell upward toward the ceiling, one at a time.
- Exhale while lifting.
- Keep head in neutral position.
- Using slight leg push is acceptable.
- Repeat with other arm.

3. Lat Pull Down

Latissimusdorsi, Rhomboids, Posterior Deltoids, Biceps

CPAT Events: Hose Drag, Ladder Extension Forcible Entry, Rescue, Ceiling Breach and Pull

Pick appropriate weight to overload above muscles but not so heavy as to cause injury or failure.

- Adjust seat and leg hold to allow full range of motion.
- Hold bar in chin up grip with hands close together and palms toward face.
- Pull bar straight down to just below the chin.
- Exhale while pulling weight down.
- Return to starting position.

4. DB Split-Squats

Glutes, Quadriceps, Hamstrings, Calves

CPAT Events: Stair Climb, Hose Drag, Ladder Raise, Forcible Entry, Search, Rescue Ceiling Pull and Breach

Pick a light weight (many people can start with no weights at all). Do not start with more than 10 lbs.

- Stand with feet together than step backward with one foot about 26".
- Keep back straight and arms down at side with head neutral, slowly bend both legs.
- Lower yourself slowly until your left knee barely touches the floor.
- Forward leg should remain vertical throughout motion with knee directly over ankle. If knee tends to move forward over the toes, adjust back foot further backward.
- Return to the starting position.
- Inhale while lowering and exhale while pushing back up into upright position.
- Repeat with opposite leg.

5. Bench Press

Pectorals, Deltoids, Triceps

CPAT Events: Ladder Raise, Forcible Entry, Search, Ceiling Breach and Pull

Pick appropriate weight to overload above muscles but not so heavy as to cause injury or failure.

- Lie on bench, feet flat on floor.
- Hold bar with arms shoulder width apart or slightly wider.
- Lower bar to middle of chest.
- Push bar up to starting position.
- Inhale while lowering and exhale while pushing back up.

■ **6. DB Row**
Latisimussdorsi, Rhomboids, Posterior Deltoids, Trapezius, Biceps

CPAT Events: Hose Pull, Ladder Extension, Forcible Entry, Rescue, Ceiling Breach and Pull

Pick appropriate weight to overload above muscles but not so heavy as to cause injury or failure.

- Standing to right of bench, place left knee on bench and support upper body with left (nonlifting) arm.
- Keep head in neutral position.
- Pull DB from ground into waist area with right arm.
- Lower DB back to starting position.
- Avoid twisting at waist.
- Inhale while lowering weight and exhale while lifting weight.
- Repeat sequence on opposite side.

■ **7. Leg Extension**
Quadriceps

CPAT Events: Stair Climb, Hose Pull, Ladder Raise, Forcible Entry, Search, Rescue

Pick appropriate weight to overload above muscles but not so heavy as to cause injury or failure.

- Adjust machine so that backs of knees are against pad and back pad is supporting lower back.
- Extend knees stopping just before the knees lock.
- Slowly lower weight to starting position.
- Exhale while pushing weight and inhale while lowering weight.

Note: This exercise should not be performed by individuals who have undergone reconstructive knee surgery.

■ **8. Leg Curl**
Hamstrings

CPAT Events: Stair Climb, Hose Pull, Ladder Raise, Forcible Entry, Rescue

Pick appropriate weight to overload above muscles but not so heavy as to cause injury or failure.

- Lie flat on machine with top of knees just off the pad and ankle roller situated above the heels.
- Flex the knee until ankle roller reaches the buttocks. Keep hips down and stomach in contact with pad throughout the motion.
- Slowly lower weight to starting position.
- Inhale while pulling weight up and exhale while lowering weight down.

■ **9. DB Curl**
Biceps, Forearms

CPAT Events: Hose Drag, Ladder Extension, Forcible Entry, Rescue, Ceiling Breach and Pull

Pick appropriate weight to overload above muscles but not so heavy as to cause injury or failure.

- Stand up with knees slightly bent.
- Begin with arms down at sides.
- Bend right elbow bringing the dumbbell toward right shoulder.
- Slowly lower dumbbell to starting position.
- Exhale while raising weight and inhale while lowering weight.
- Repeat sequence on opposite side.

■ **10. Tricep Extension**
Triceps

CPAT Events: Ladder Raise, Forcible Entry, Search, Ceiling Breach and Pull

Pick appropriate weight to overload above muscles but not so heavy as to cause injury or failure.

- Stand up with knees slightly bent.
- Place hands on bar about 6" apart.
- Keeping upper arms at sides, extend the elbows until arms are almost straight and bar is at mid-thigh.
- Slowly return bar to an elbow flexed position at mid-chest level. Upper arms should remain in contact with sides. Do not allow elbows to move forward, away from body.
- Exhale while pushing bar down and inhale while returning bar back up.

■ **11. Abdominal Curls**
Abdominal Muscles

CPAT Events: All Events

- Sit on ground with knees bent at 90 degrees.
- Keeping feet flat on floor and hands at your side, slowly curl your torso so chin approaches your chest.
- Do not raise torso to more than a 45-degree angle off the floor.
- Slowly return to slightly above your starting position, keeping tension on abdominal muscles at all times.
- Exhale while curling up and inhale while lowering torso back down.

■ **12. Swimmers**
Erector Spinae (Lower back), Glutes

CPAT Events: All Events

- Lie face down on ground with feet together.
- Place arms straight out in front.
- Move the right arm and left leg up at the same time.
- As you return the right arm and left leg, move the left arm and right leg up at the same time.
- Continue alternating in a moderate cadence.

■ **13. Wrist Rollers**
Forearm muscles

CPAT Events: Hose Drag, Equipment Carry, Ladder Extension,

Forcible Entry, Rescue, Ceiling Breach and Pull

- Stand erect
- Set machine to "somewhat difficult" resistance
- Grab machine with both palms facing the floor
- Alternately roll each wrist towards the ceiling
- Repeat with palms upward when done

■ **14. Hand Grippers**
Forearm muscles

CPAT Events: Hose Drag, Equipment Carry, Ladder Extension,

Forcible Entry, Rescue, Ceiling Breach and Pull

- Stand erect
- Set machine to "somewhat difficult" resistance
- Grab machine with both hands
- Alternately close grip to squeeze machine

■ **Exercises without Weights**

Although it is easier to improve muscular strength and endurance with weight equipment, it is also possible to accomplish this with some simple exercises. These exercises require minimum equipment and can be done almost anywhere. Perform these exercises in a circuit. Move from one exercise to the next with minimal rest. Initially, work in the somewhat hard range. This means do not exercise to failure. Start by going through the circuit one time and then gradually progress until you can complete this circuit three times in a row.

■ **Calisthenics Circuit Workout**

■ **1. Chair Squats**
Glutes, Quadriceps, Hamstrings

CPAT Events: Stair Climb, Hose Drag, Ladder Raise, Forcible Entry, Search, Rescue Ceiling Pull and Breach

- Stand in front of a sturdy and stable chair with legs shoulder width apart and toes pointing slightly outward.
- Hold arms out straight in front of you.
- Slowly lower your buttocks into the chair.
- As soon as you feel the slightest contact with the chair, slowly stand back up to the starting position.
- Keep your head in a neutral position.
- Inhale while lowering yourself and exhale while standing up.

■ **2. Push Ups**
Pectorals, Deltoids, Triceps, Abdominals, Low Back)

CPAT Events: Ladder Raise, Forcible Entry, Search, Ceiling Breach and Pull

- Place hands on ground shoulder width apart or slightly more.
- Keep feet together and back straight throughout the exercise.
- Lower the body until the upper arms are at least parallel to the ground.
- Push yourself up to the initial position by completely straightening arms.
- Inhale while lowering and exhale while pushing.

■ **3. Split-Squats**
Glutes, Quadriceps, Hamstrings, Calves

CPAT Events: Stair Climb, Hose Drag, Ladder Raise, Forcible Entry, Search, Rescue, Ceiling Pull and Breach

- Stand with feet together then step backward with foot about 26" behind left foot.
- Keep back straight and arms down at sidewith head neutral, slowly lower right knee straight down onto the floor.
- Inhale while lowering and exhale while pushing back up into upright position.
- Forward leg should remain vertical throughout motion, with knee directly over ankle. If knee tends to move forward over the toes, adjust back foot further backward.
- Repeat with other leg.

■ **4. Chin Ups**
Latissimusdoris, Rhomboids, Posterior Delts, Biceps

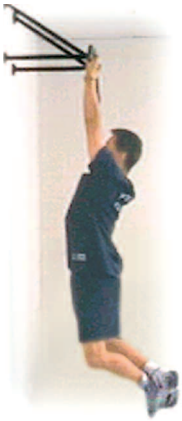

CPAT Events: Hose Drag, Ladder Extension, Forcible Entry, Rescue, Ceiling Pull and Breach

- Grasp horizontal bar with palms facing you and hands 6" apart.
- Hang from bar with arms fully extended.
- Pull yourself upward until your chin is above the bar.
- Do not kick or swing your legs.
- Return to the starting position.
- Inhale while lowering yourself and exhale while pulling yourself up.
- If unable to complete 3 chin ups, elevate yourself to the bar with a stool or a partner, and slowly lower yourself down in a slow and controlled fashion.

■ **5. Bench Steps**
Glutes, Quadriceps, Hamstrings, Calves

CPAT Events: Stair Climb, Hose Drag, Ladder Raise, Forcible Entry, Search, Rescue, Ceiling Pull and Breach

This requires good balance, so initially set the step next to a wall or use a partner for safety.

- Use a step or bench 6" to 18" high.
- Place right foot flat on the bench with the left foot flat on the floor.
- Push down with the foot on the bench and step up until both legs are straight.
- Slowly lower yourself back down to the starting position.
- Exhale while pushing up and inhale while lowering down.
- Repeat entire sequence with other leg.
- Start with a smaller step and progressively increase the height. Do not exceed 18" high.

■ **6. Dips**
Pectorals, Deltoids, Triceps

CPAT Events: Ladder Raise, Forcible Entry, Search, Ceiling Pull and Breach

- Place hands behind you on dip bar or chair with feet straight in front.
- Bend arms and lower body in a controlled manner until the upper arms are parallel with the floor.
- Straighten the arms to return to the starting position.
- Legs can be bent to keep feet from touching the floor.
- If unable to perform 3 dips, use a stool or a partner to help you up and then lower yourself down slowly.
- Inhale while lowering yourself and exhale while pushing up.

■ **7. Squat Thrusts**
Pectorals, Deltoids, Triceps, Abdominals, Glutes, Quadriceps

CPAT Events: Stair Climb, Hose Pull, Ladder Raise, Forcible Entry, Search

- Stand erect with feet together.
- Quickly bend knees until palms touch the floor just slightly in front of you.
- Supporting weight with arms, tighten your abdominal muscles, and throw your feet backwards until you are in the push up starting position.
- Reverse sequence until you are back at the starting position. This is one repetition.
- Inhale and exhale evenly throughout the exercise

■ **8. Abdominal Curls**
Abdominal Muscles

CPAT Events: All Events

■ Sit on ground with knees bent at 90 degrees.
■ Keeping feet flat on floor and hands at side, slowly curl torso so chin approaches your chest. Do not raise torso to more than a 45-degree angle off the floor.
■ Slowly return to slightly above your starting position, keeping tension on abdominal muscles at all times.
■ Exhale while curling up and inhale while lowering torso back down.

■ **9. Swimmers**
Erector Spinae (Lower back), Glutes

CPAT Events: All Events

■ Lie face down on ground with feet together.
■ Place arms straight out in front of you.
■ Move the right arm and left leg up at the same time.
■ As you return the right arm and left leg, move the left arm and right leg up at the same time.
■ Continue alternating in a moderate cadence.

■ **10. Hand Grippers**
Forearm muscles

CPAT Events: Hose Drag, Equipment Carry, Ladder Extension, Forcible Entry, Rescue, Ceiling Breach and Pull

■ Stand erect
■ Place tennis ball in palm of hand
■ Slowly squeeze hand compressing tennis ball
■ Repeat with other hand

Supplemental Task-Specific Exercise Training

INTRODUCTION

The supplementary exercise program presented in the following sections not only makes use of the overload principal of training but also applies the all-important principal of training specificity. Exercise training specificity means that performance improvements occur most readily when training closely resembles the specific physical activity for which improved performance is desired. When training for specific activities requiring high levels of muscular strength and muscular power (e.g. hose drag and pull from kneeling position, ladder raise and extension, sledge hammer swing, dummy drag, and ceiling breach and pull) task-specific muscular overload should accompany a general strength training program. Practice and training in the specific activity becomes crucial because much of the improvement in muscular strength/power performance depends upon skill learning and new muscular adaptations (i.e., coordination of specific muscle actions) required for the physical task. In most instances, training in the actual task proves most effective.

The following program provides examples for applying your general training program to actually performing CPAT tasks. As with your other preparation training, you must progressively upgrade the duration, frequency, and intensity of exercise to continually improve your performance. This will maximize your improvement in performing the CPAT.

In the beginning phase of this training, progress slowly so that you can safely learn the skill and coordination required for the movements. As you become confident in your ability to successfully complete a specific exercise task with relative ease, redirect your training energies to those activities that pose the greatest difficulty. For many people, the stair climb with full weights, forcible entry, and rescue prove the most difficult.

■ **Stair Climb**

Exercise

You can readily modify aerobic training to more closely resemble the 3-minute stair climb in the CPAT by performing actual stair-stepping exercise on any conveniently located first step of a staircase, preferably at least 8 inches in height. Step at a rate that permits completion of 24 complete stepping cycles within a one-minute period. A stepping cycle consists of stepping up with one foot, then the other and down with one foot, then the other in a rhythm "up-up, down-down." Strive to complete two stepping cycles within a 5-second period.

Progression

Begin training by stepping continuously (unweighted) for 5 minutes. As your fitness improves, complete a second and then third 5 minute exercise bout interspersed with several minutes of recovery. Once you can complete three intervals of 5-minutes of stepping, add weight to your torso in the form of a knapsack to which weights, sand, dirt or rocks have been added. Continue to perform three 5-minute intervals of stepping; progressively add weight to the knapsack as your fitness improves so that you can step with 50 pounds of additional weight. (This 50-pound knapsack and work gloves should be worn in training for all subsequent events of the CPAT.) In addition, carry 10-15 pounds (dumbbell, sand filled plastic container) in each hand while stepping. The total weight carried (knapsack plus hand-held weights) should equal approximately 75 pounds. At this stage, reduce the duration of the exercise interval to 3 minutes. This task-specific training not only improves aerobic fitness for continuous stepping but it also improves your leg power for stepping in the weighted condition, which represents a unique component of this CPAT item.

Hose Drag

Exercise
Attach 50 feet of rope to a duffel bag to which weight has been added. Tires or cement blocks can also be used for resistance. Choose an initial resistance that enables you to perform 8 to 10 repetitions (2-minute recovery between repetitions) of the exercise sequence. This generally represents an effort that you would rate as feeling "somewhat hard."

Progression
Progressively increase the resistance to 60 to 80 pounds as fitness improves. Place the rope over your shoulder and drag the resistance a distance of 75 feet. (You should run during this phase of the event.) Immediately drop to one knee and steadily and briskly pull the rope hand-over-hand to bring the resistance into your body. A parking lot, school yard, driveway, or sidewalk can be used for training on this event.

Equipment Carry

Exercise
Use two dumbbells or plastic containers filled with sand so that each weighs approximately 30 pounds. Place the weights on a shelf four feet above ground level. Remove the weights, one at a time, and place them on the ground. Then pick up the weights and carry them a distance of 40 feet out and 40 feet back and replace them on the shelf.

Progression
If the initial weight feels too heavy, choose a lighter weight for your initial practice. Continue to practice this test item until it can be performed with 30 pounds with relative ease.

Ladder Rise and Extension

Exercise
Ladder Raise. The ideal training for this task requires an actual 12-foot aluminum extension ladder. If this size ladder is unavailable, you can use a single ladder or smaller extension ladder to practice the skill required raising the ladder. Practice of the ladder raise sequence requires the assistance of two adults to "foot" the ladder at its base to prevent it form sliding forward and/or falling during the raise. In practicing this component (as described in the test directions) it is important to initially move slowly so as to develop the skill and confidence to safely complete the required movements. Be sure to use each rung when raising the ladder to develop the coordination and timing necessary on the CPAT.

Exercise
Ladder Extension. Task-specific training of the muscles required in the ladder extension can be provided by attaching a rope to a weighted duffel bag or knapsack. Place the rope over a tree branch (or horizontal bar support above a row of playground swings) eight to ten feet above the ground. With hand-over-hand movements steadily raise the bag to the top of the branch or bar and then slowly lower it to the ground.

Progression
Start with a weight that you would rate as feeling "somewhat hard," and perform eight to ten repetitions of the movement. Rest two minutes and repeat the exercise-rest sequence two more times. As your strength improves progressively add more resistance until you can exercise with 40 to 50 pounds of weight.

Forcible Entry

Exercise
Borrow or purchase a ten-pound sledgehammer. Wrap padding around a large tree or vertical pole at a level of 39 inches above the ground with a circular target in the center. Stand sideways and swing the sledgehammer in a level manner so the head strikes the center of the target area. Focus on using your legs and hips to initiate the swinging motion.

Progression
The initial phase of this task-specific training should focus on learning the coordinated movement of your arms and legs to accurately hit the target. Repeat the swing 15 times and rest for two minutes. Repeat this exercise-rest sequence twice again. Strive to increase the velocity (power) of each swing without sacrificing accuracy as your comfort level and skill on this test item improve.

Search

Exercise
Practice crawling on hands and knees (wearing sweat pants and/or kneepads) at least 70 feet while making several right angle turns during the crawl. For the major portion of the crawl keep low enough so as not to contact an object three feet above the ground. Periodically, drop your stomach and crawl ten feet along the ground.

Progression
Once you are comfortable crawling as above repeat the sequence with a knapsack on. Gradually increase the weight within the knapsack until it equals 50 pounds.

Rescue

Exercise
Attach a short handle to a duffel bag to which rocks, sand, or other appropriate weight can be progressively added. Start with a weight that feels "somewhat heavy." You can grasp the handle with (a) one hand and drag the "victim" in a cross-over, side-stepping manner, or (b) two hands while facing the "victim" and moving directly backwards while taking short, rapid stagger steps. Drag the weight 35 to 50 feet in one direction turn around and drag it back to the starting point. Complete eight to ten repetitions of this task with a two-minute rest interval between each trial.

Progression
Gradually increase the resistance until you can successfully complete 4 repetitions (with rest interval) with 165 pounds.

■ Ceiling Breach and Pull

Exercise
Ceiling Breach. Tie a rope to a dumbbell or weighted knapsack placed between your legs, shoulder width apart. Grasp the rope, arms slightly away from the body with one hand at upper-thigh level and the other hand at chest level. Lift upwards and out from the body in an action that simulates thrusting a pole through an overhead ceiling. Use a resistance that feels "somewhat hard," yet enables you to complete three sets of eight repetitions with two minutes of rest between sets.

Progression
Continually add weight as strength improves. Practice coordinating upward arm movements with an upward extension of the legs to provide a more powerful thrusting action.

Exercise
Ceiling Pull. The training set-up for this simulation is the same as that used in training for the ladder extension. However, unlike the hand-over-hand movement that is required for the ladder extension the ceiling pull requires exerting power in single, repeated downward thrusts. Grasp the rope attached to the weighted knapsack or duffel bag with hands spaced about one-foot apart and the bottom hand at chin level. In a powerful movement simultaneously pull arms down and lower your body to raise weight several feet above the ground. Repeat eight to ten consecutive repetitions of the movement with a resistance that feels "somewhat hard." Complete three sets with a two-minute recovery interval interspersed.

Progression
Progressively add resistance as fitness improves.

As your fitness improves you should begin to link the various test components. For example, immediately upon finishing the stair climb move directly to the hose drag and then to the equipment carry. Eventually you will be able to simulate all of the task components in the CPAT in a continuous exercise sequence. ■

APPENDIX C
SAMPLE CPAT FORMS

ACKNOWLEDGEMENT AND WAIVER OF CPAT ORIENTATION AND/OR CONDITIONING PERIOD AND/OR TIMED PRACTICE RUNS.

This form must be signed before you will be permitted to take the Candidate Physical Ability Test (CPAT) if you did not attend the orientation and practice sessions prior to this test.

A fire department administering CPAT as a condition of hire, must ensure that all candidates were provided full and equal access to a CPAT orientation and practice program. The orientation and practice program must commence at least eight (8) weeks before commencement of the official CPAT test date. This program is composed of two phases.

1. The fire department will provide each candidate a full and equal opportunity to attend at least two (2) orientation sessions during which candidates will receive “hands-on” familiarity with the actual CPAT test apparatus. These required orientation sessions will be provided by certified Peer Fitness Trainers, fitness professionals and/or CPAT-trained fire fighters (proctors). These individuals will familiarize each candidate with each CPAT task and the test apparatus. They will advise all candidates concerning specific conditioning regimens and techniques to help each candidate prepare for the CPAT test.

2. The fire department will provide each candidate a full and equal opportunity to attend at least two (2) timed practice runs of the CPAT, using CPAT apparatus. These required practice runs must occur within thirty (30) days before the commencement of the official CPAT test dates. Following each practice session, certified Peer Fitness Trainers, fitness professionals, and/or CPAT-trained fire fighters (proctors) shall help the candidates understand the test elements and how they can improve their performance and conditions.

This two-phased orientation and practice program is a mandatory condition for candidates taking the CPAT test. However, it is recognized that some individuals may be capable of passing CPAT without participation in these programs. These individuals may excuse themselves from this mandatory condition upon the receipt by the fire department of a written and signed waiver, acknowledging that the fire department made available these programs on an equal basis to all candidates and that the candidate knowingly and voluntarily waived participation in the orientation and practice sessions.

Orientations and practice sessions are designed to give each candidate identical information regarding the test so that each will have the maximum probability for success. During the classroom orientation, candidates are shown the CPAT orientation video and are given the CPAT Candidate Preparation Guide. The orientation and practice sessions provide an equal and full opportunity for each candidate to view the test events, talk with qualified professionals and instructors and physically examine and use test equipment, tools, and props in a controlled and consistent setting. Candidates are directed to familiarize themselves with all elements of the test. Further information regarding the orientation and practice sessions may be obtained from your fire department.

I have read and understand the nature of the orientation and practice sessions and the time period between orientation and actual CPAT administration. By executing this acknowledgment, I hereby knowingly and voluntarily waive my right to participate in the above-described ❑ orientation and/or ❑ practice sessions.

LAST NAME (please print) _____ FIRST NAME _____

APPLICANT SIGNATURE _____ DATE _____

CANDIDATE PHYSICAL ABILITY TEST SIGN IN SHEET

LAST NAME: _____ FIRST NAME: _____ MI: _____
(please print)

STREET ADDRESS: _____

CITY: _____

STATE/PROVINCE: _____
ZIP/POSTAL CODE:

TELEPHONE #: _____

DATE OF BIRTH: _____

IN CASE OF EMERGENCY , I AUTHORIZE YOU TO CONTACT:

NAME: _____

ADDRESS: _____

TELEPHONE: _____

SIGNATURE: _____ DATE: _____

CANDIDATE PHYSICAL ABILITY TEST
WAIVER OF CLAIM FOR INJURY

This form must be signed before you will be permitted to participate in the Candidate Physical Ability Test.

You will be asked to perform eight (8) physical tasks and will be given specific instructions (by videotape and proctors) in the manner in which these physical tasks are to be performed. The eight (8) physical tasks are:

1. STAIR CLIMB
2. HOSE DRAG
3. EQUIPMENT CARRY
4. LADDER RAISE AND EXTENSION
5. FORCIBLE ENTRY
6. SEARCH
7. RESCUE
8. CEILING BREACH AND PULL

I have read and understand the physical effort which this Candidate Physical Ability Test involves. I am physically capable of participating in this test. I hereby waive any and all claims for or arising out of any injury I might sustain or incur as a result of participating in the Candidate Physical Ability Test. I voluntarily participate as part of my application for employment.

LAST NAME: _____ FIRST NAME: _____ MI: _____
(please print)

APPLICANT SIGNATURE: _____ DATE: _____

CANDIDATE PHYSICAL ABILITY TEST REHABILITATION FORM

It is normal to feel tired after the performance test. There are some signs that may mean that the exertion is causing more serious problems. If any of the following signs or symptoms occur, you should call your physician or the local Emergency Services.

- ☐ Nausea, vomiting, dizziness, or headache lasting more than a few hours
- ☐ Extreme weakness
- ☐ Fever
- ☐ Confusion
- ☐ Generalized muscle aching lasting more than one day
- ☐ Dark urine or very little urine

LAST NAME: _____ FIRST NAME: _____ MI: _____
(please print)

APPLICANT SIGNATURE: _____ DATE: _____

TIME IN:_____ TIME OUT:_____

Candidate Physical Ability Test Evaluation Form

CANDIDATE NAME (Please Print)			DATE:
Last:	First:	MI:	SSN or ID #:
EVENT 1 STAIRCLIMB		Check all boxes that apply	☐ Self Elimination
☐ **1st Fall or Dismount During Warm-up** *Warm-up re-started*	☐ **2nd Fall or Dismount During Warm-up** *Warm-up re-started*	☐ **Disqualification** *(Falls or Dismounts during test or 3rd time during warm-up)*	Elapsed Time at Disqualification:
☐ **1st Warning** *Grasped wall or equipment for weight bearing*	☐ **2nd Warning** *Grasped wall or equipment for weight bearing*	☐ **Disqualification** *(Fall or Dismount)*	
EVENT 2 HOSE DRAG		Check all boxes that apply	☐ Self Elimination
☐ **Disqualification** *Fails to go around drum or goes outside marked path*			Elapsed Time at Disqualification:
☐ **1st Warning** *No knee contact w/ ground during hose pull*	☐ **1st Warning** *Knee outside box during hose pull*	☐ **1st Warning** *1 step outside marked box during hose pull*	
☐ **Disqualification** *No knee contact w/ ground during*	☐ **Disqualification** *Knee outside box during hose pull*	☐ **Disqualification** *2 steps outside marked box*	
EVENT 3 EQUIPMENT CARRY		Check all boxes that apply	☐ Self Elimination
☐ **Disqualifiction** *Saw dropped to ground during carry*			Elapsed Time at Disqualification:
☐ **1st Warning**	☐ **Disqualification**		
EVENT 4 LADDER RAISE & EXTENSION		Check all boxes that apply	☐ Self Elimination
☐ **1st Warning** *Misses rung during raise*	☐ **Disqualification** Misses rung during raise		Elapsed Time at Disqualification:
☐ **Disqualification** *Allows ladder to fall during raise, safety lanyard activated*			
☐ **Disqualification** *Does not maintain control of rope halyard in a hand over hand manner, allowing rope to slip in an uncontrolled manner*			
☐ **1st Warning** *Steps outside box*	☐ **Disqualification** *Steps outside box*		
EVENT 5 FORCIBLE ENTRY		Check all boxes that apply	☐ Self Elimination
☐ **1st Warning** *Steps inside toe-box*	☐ **Disqualification** *Steps inside toe box*		Elapsed Time at Disqualification:
☐ **Disqualification** *Does not maintain control of sledgehammer - released from both hands*			
EVENT 6 SEARCH		Check all boxes that apply	☐ Self Elimination
☐ **Disqualification** *Requested assistance requiring an assisted extraction*			Elapsed Time at Disqualification:
EVENT 7 RESCUE		Check all boxes that apply	☐ Self Elimination
☐ **1st Warning** *Grasps or rests on drum*	☐ **Disqualification** *Grasps or rests on drum*		Elapsed Time at Disqualification:
EVENT 8 CEILING BREACH AND PULL		Check all boxes that apply	☐ Self Elimination
☐ **1st Warning** *Steps outside boundary*	☐ **Disqualification** *Steps outside boundary*		Elapsed Time at Disqualification:
☐ **1st Warning** *Drops pike pole to ground*	☐ **Disqualification** *Drops pike pole to ground*		
BETWEEN EVENTS		Check all boxes that apply	☐ Self Elimination
☐ **1st Warning** *Running*	☐ **Disqualification** *Running*		Elapsed Time at Disqualification:
			Use this column if candidate fails an Event
Lead Proctor's Name		Event # _____ Event Proctor's Name	
Lead Proctor's Signature		Event Proctor's Signature	
Candidate's Signature			
Time on Clock at Finish	**Min.** **Sec.**	**PASS / FAIL / DQ**	

APPENDIX D
CPAT TOOL, PROP, AND EQUIPMENT LIST

To purchase all required CPAT Equipment from one source, contact:

All CPAT Equipment

■ **CPAT Distribution**
721 East Foothill Boulevard
Monrovia, CA 91016
Phone: (626) 599-8814
FAX: (626) 599-8824

To purchase all required CPAT Equipment separately, contact:

■ Hard Hat with Chin Strap; Bullard Advent Model A-1

For Local Distributor contact:
E.D. Bullard Co.
1898 Safety Way
Cynthiana, KY 41031
Phone: (800) 827-0423
FAX: (606) 234-6858

■ Work Gloves; Memphis Work Glove G1-1400

Western Glove and Safety
4610 South 33rd Place
Phoenix, AZ 85040
Phone: (800) 200-8555
FAX (602) 268-0515

■ StairMaster StepMill 7000 PT

For Local Distributor contact:
Nautilus, Inc.
Global Headquaters
16400 SE Nautilus Drive
Vancouver, WA 98683
Phone: (360) 859-2900

■ 165 lb. Mannequin (Rescue Randy); Large Body-IAFF #149-1475
■ 50 lb. Weighted Vest; Large-IAFF # 950-1125
■ 50 lb. Weighted Vest; Medium-IAFF # 950-1120
■ Shoulder Weights; IAFF # 950-1000

For Local Distributor contact:
Simulaid
12 Dixon Avenue
Woodstock, NY 12498
Phone: (800) 431-4310
FAX: (914) 679-8996

■ Mannequin Harness; Yates 950 IAFF/Rescue Randy Harness

Yates Gear, Inc.
2608 Hartnell Avenue, #6
Reading, CA 96002
Phone: (530) 222-4606
E-mail: prodesig@snowcrest.net

■ Aluminum Extension Ladders (24-foot); DuoSafety 900A

Duo-Safety Ladder Corporation
513 West 9th Avenue
Oshkosh, WI 54902-0497
Phone: (920) 231-2740
FAX: (920) 231-2460

■ Pivoting bracket for ladder raise and attaching brackets for ladder extension

ADF STEEL
8339 W. Cavalier Drive
Glendale, AZ. 85305
Phone: (602) 448-6445
E-Mail: MM1609@aol.com

■ Ulta-Safe Retractable Ladder Harness (25-foot nylon web); FPUSHPB25
■ 4 3/8" Caribiner; FP 96594

Western Glove and Safety
4610 South 33rd Place
Phoenix, AZ 85040
Phone: (800) 200-8555
FAX (602) 268-0515

■ Forcible Entry Machine

ALCO Machine
7351 Adams Street
Paramount, CA 90723
Phone: (562) 634-9664

- 10-lb. Sledgehammer; NUPLA BD-10 SG-IAFF (modified grip)
- 6-foot Pike Pole; NUPLA YPD-6-IAFF (Monoprene Pro-Tec grip)

NUPLA Corporation
11912 Sheldon Street
Sun Valley, CA 91352
Phone: (800) 872-7661
FAX: (800) 546-8752

- Ceiling Breach and Pull Machine

ADF STEEL
8339 W. Cavalier Drive
Glendale, AZ. 85305
Phone: (602) 448-6445
E-Mail: MM1609@aol.com

PROP LIST

- Tool Cabinet (see specs and drawings)
- Search Maze (see specs and drawings)
- StepMill Steps (see specs and drawings)
- StepMill Platform (see specs and drawings)
- Forcible Entry Toe-Box (see specs and drawings)

FIRE DEPARTMENT PROVIDED ITEMS

- Four 55-gallon [US] weighted drums (Two secured together for hose drag)
- # Traffic Cones
- 200 feet of double jacketed 1 3/4” hose (fire department provided)
- Automatic Nozzle (6 lbs [± 1lb] (3 kg [± .5 kg]))
- Rescue Circular Saw 32 ± 3 lbs (14.5 ± 1.3 kg) with guarded blade, all fluids drained and spark plug removed (fire department provided)
- Chain Saw 28 ± 3 lbs (12.7 ± 1.3 kg) with guarded blade, all fluids drained and spark plug removed (fire department provided)

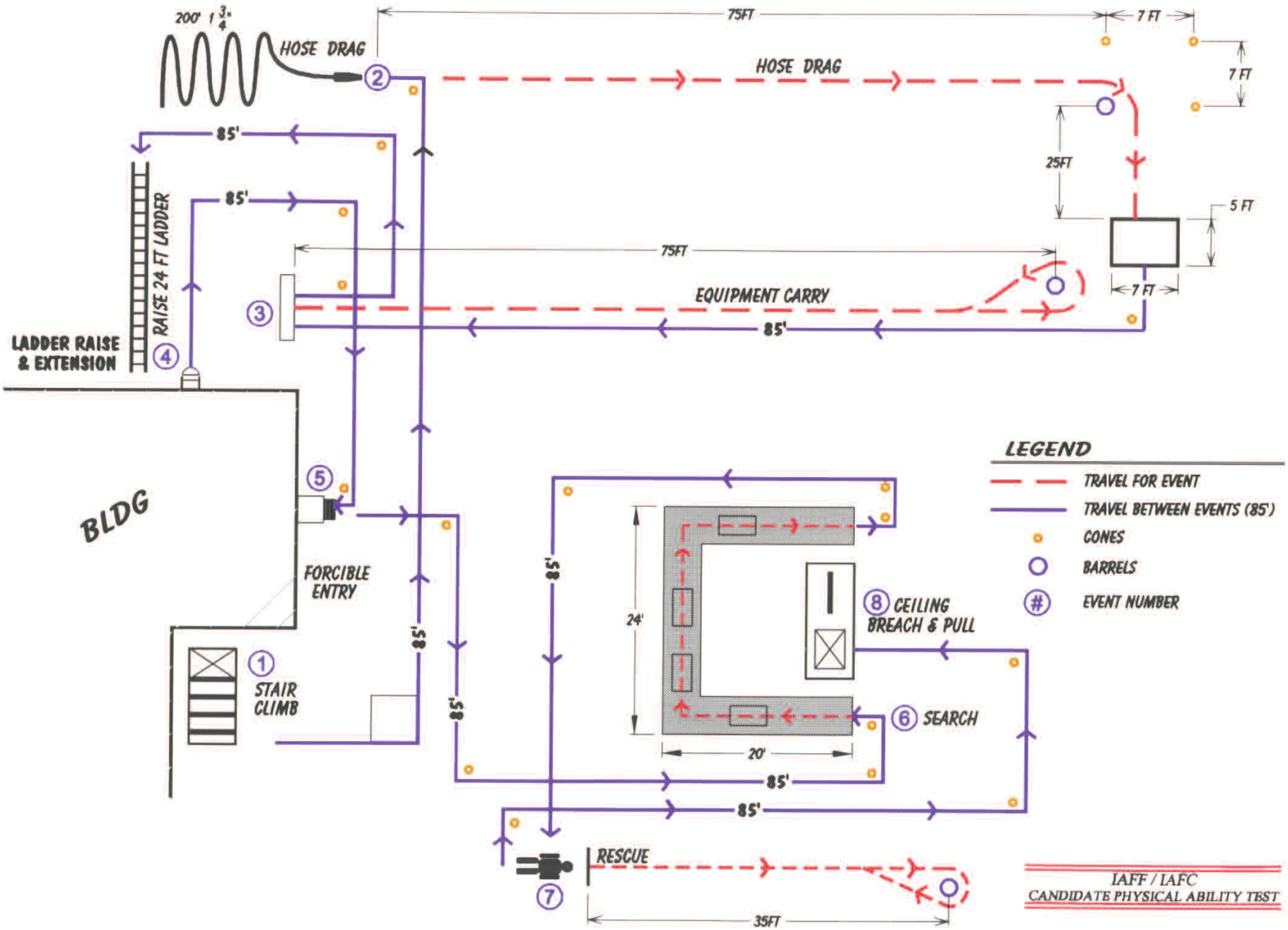
200' 1 3/4"
HOSE DRAG
75FT
7 FT
HOSE DRAG
7 FT
85'
25FT
5 FT
85'
RAISE 24 FT LADDER
75FT
EQUIPMENT CARRY
7 FT
85'
LADDER RAISE & EXTENSION
BLDG
FORCIBLE ENTRY
85'
85'
85'
24'
8 CEILING BREACH & PULL
1 STAIR CLIMB
6 SEARCH
20'
85'
85'
RESCUE
7
35FT
LEGEND
TRAVEL FOR EVENT
TRAVEL BETWEEN EVENTS (85')
CONES
BARRELS
EVENT NUMBER
IAFF / IAFC
CANDIDATE PHYSICAL ABILITY TEST

STAIR CLIMB
(EVENT 1)

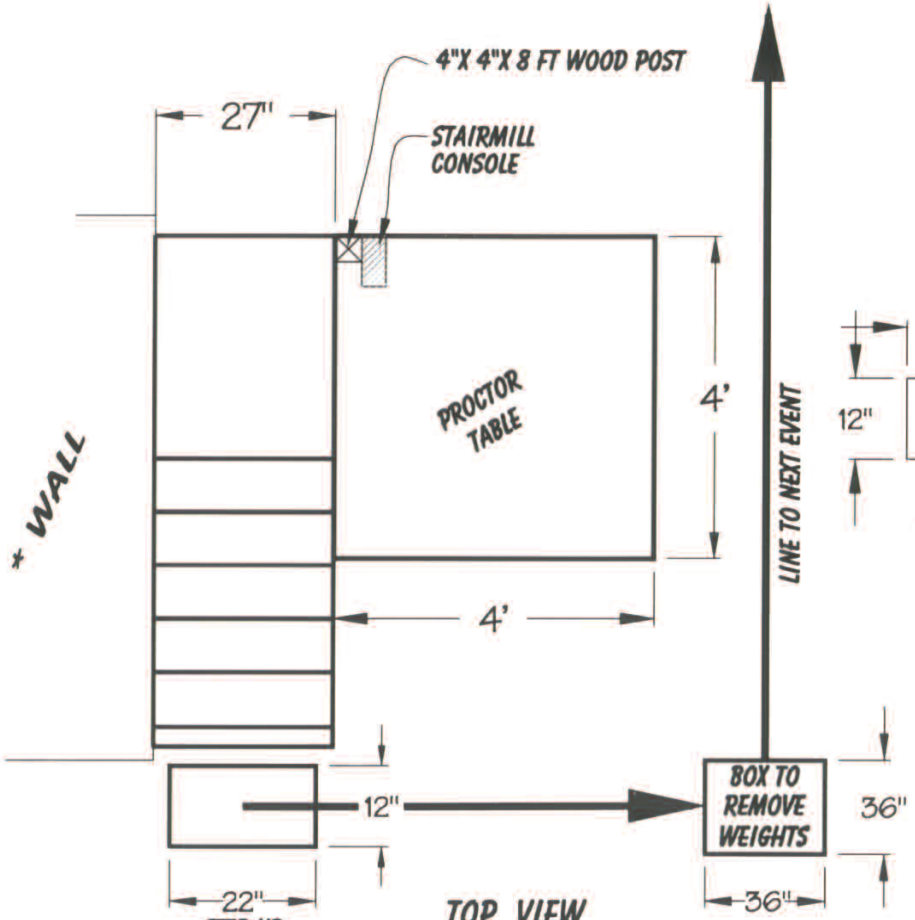

TOP VIEW

* THIS CAN BE REVERSED WITH WALL ON OPPOSITE SIDE.

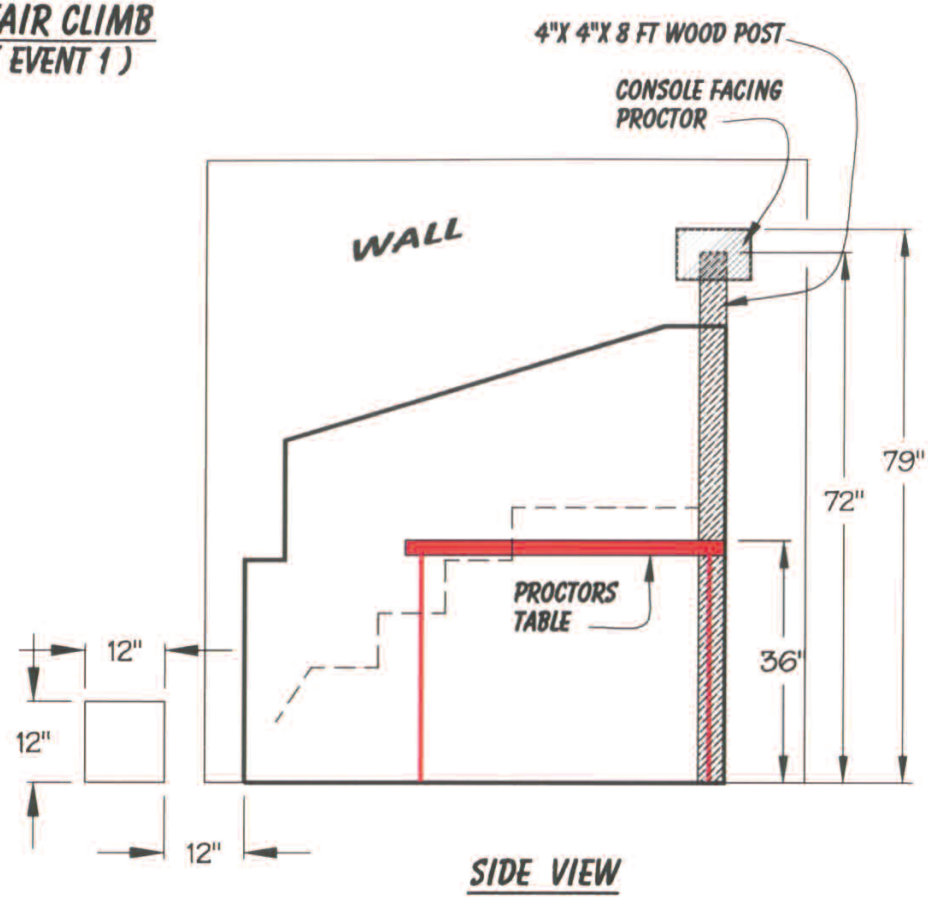

SIDE VIEW

IAFF / IAFC
CPAT DETAILS EVENT 1

HOSE DRAG
(EVENT 2)

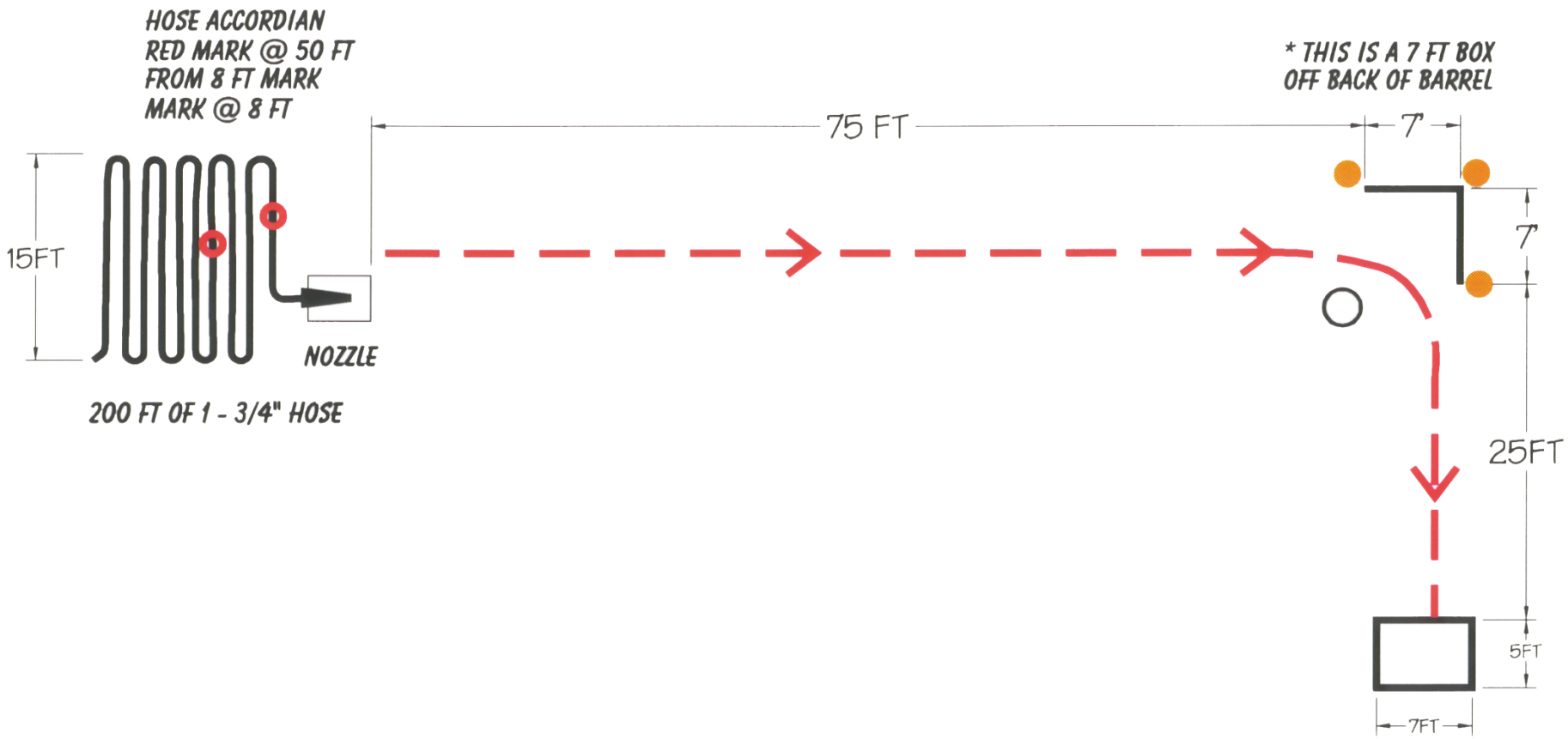

IAFF / IAFC
CPAT DETAILS EVENT 2

EQUIPMENT CARRY
(EVENT 3)

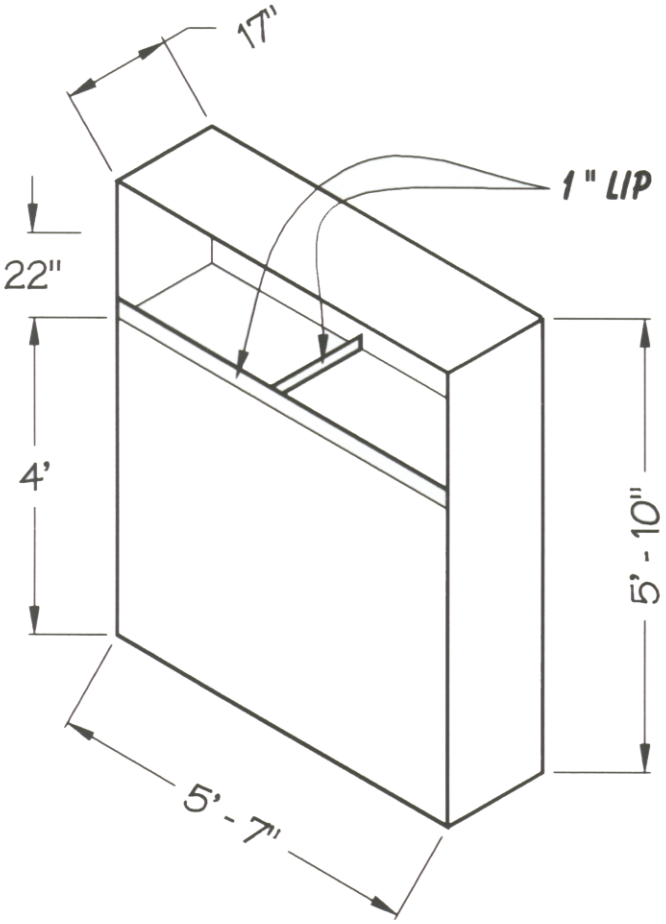

EQUIPMENT CARRY

IAFF / IAFC
CPAT DETAILS EVENT 3

LADDER RAISE & EXTENSION

(EVENT 4)

SIDE VIEW

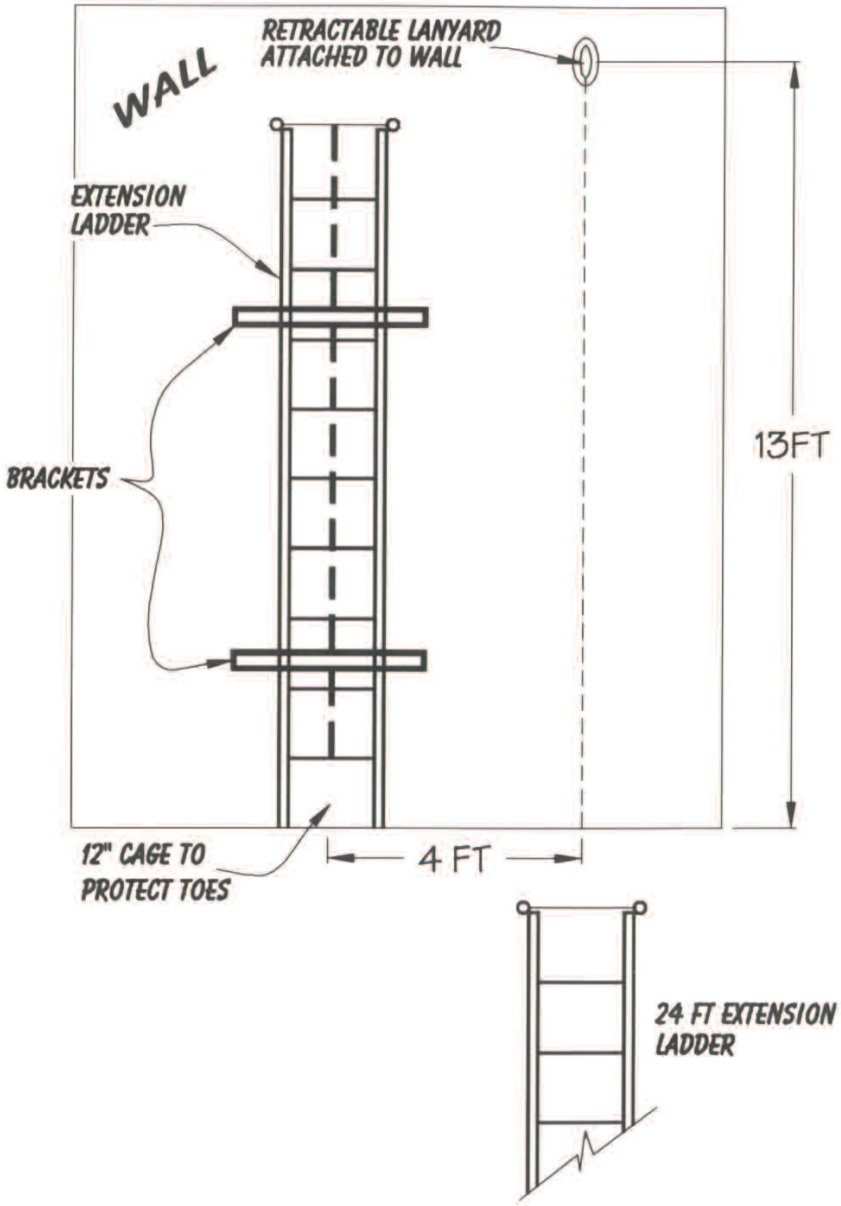

TOP VIEW

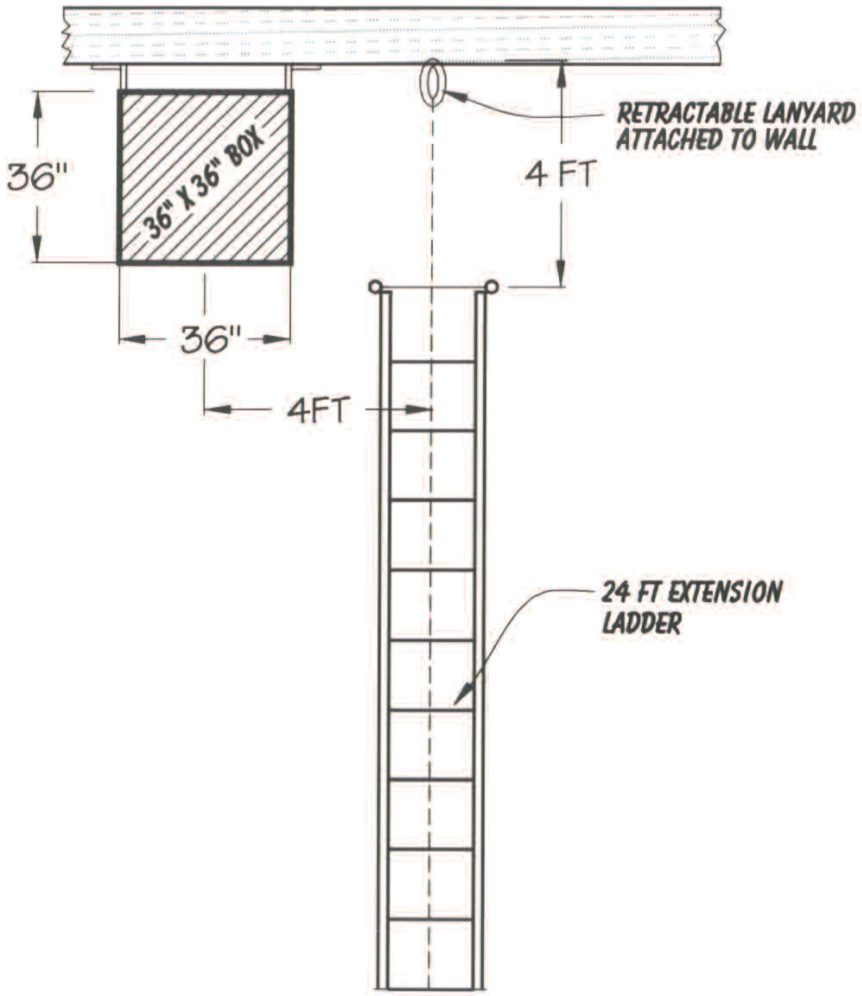

IAFF / IAFC
CPAT DETAILS EVENT 4

FORCIBLE ENTRY
(EVENT 5)

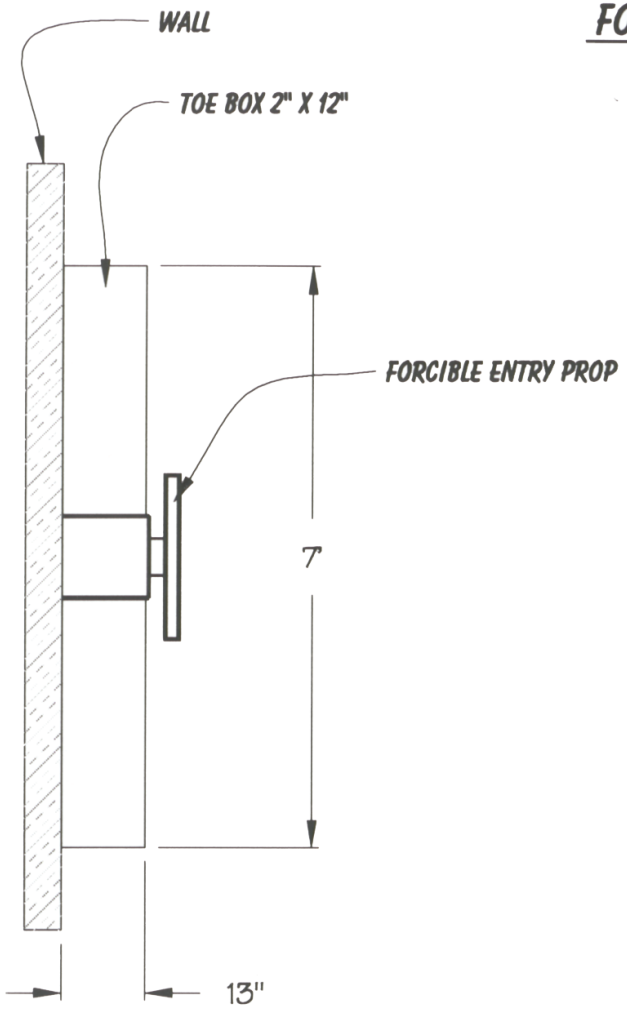

TOP VIEW

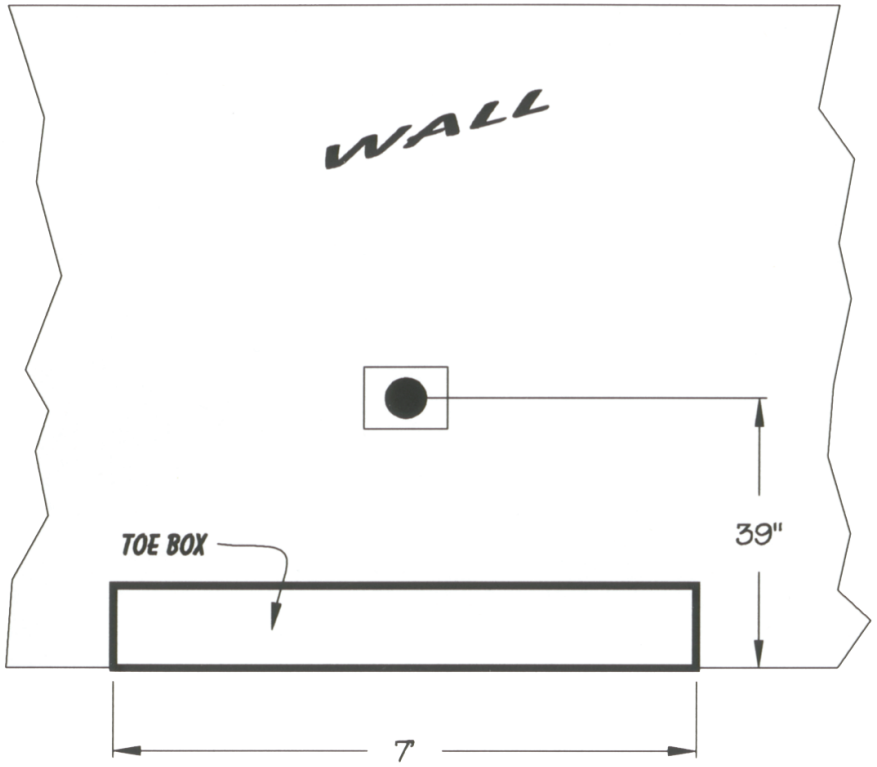

FRONT VIEW

IAFF / IAFC
CPAT DETAILS EVENT 5

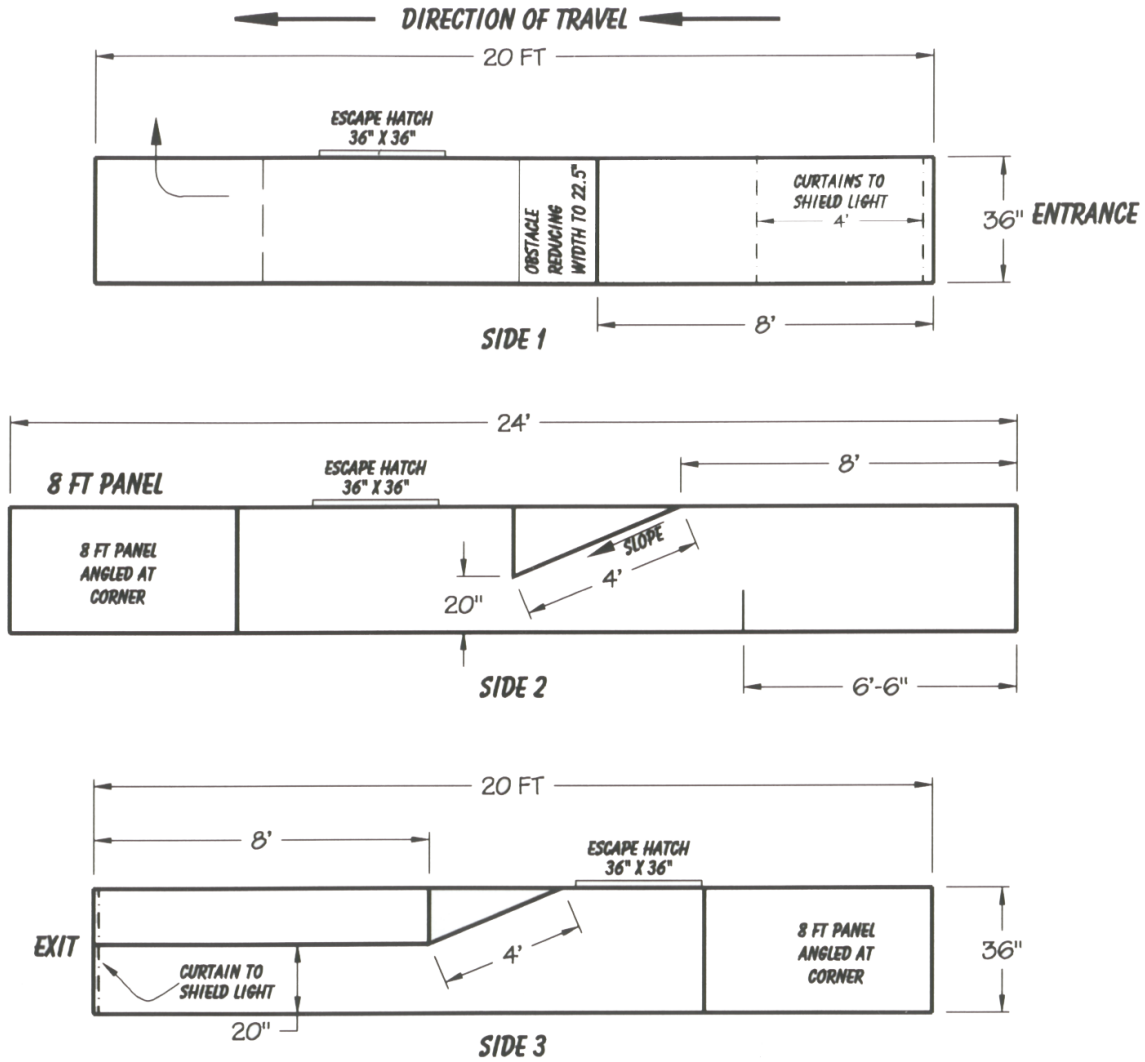

SEARCH MAZE DETAIL (EVENT 6)

1/4" = 1' - 0"

MAZE SHOULD BE 48" WIDE X 36" HT.

IAFF / IAFC
CPAT DETAILS EVENT 6

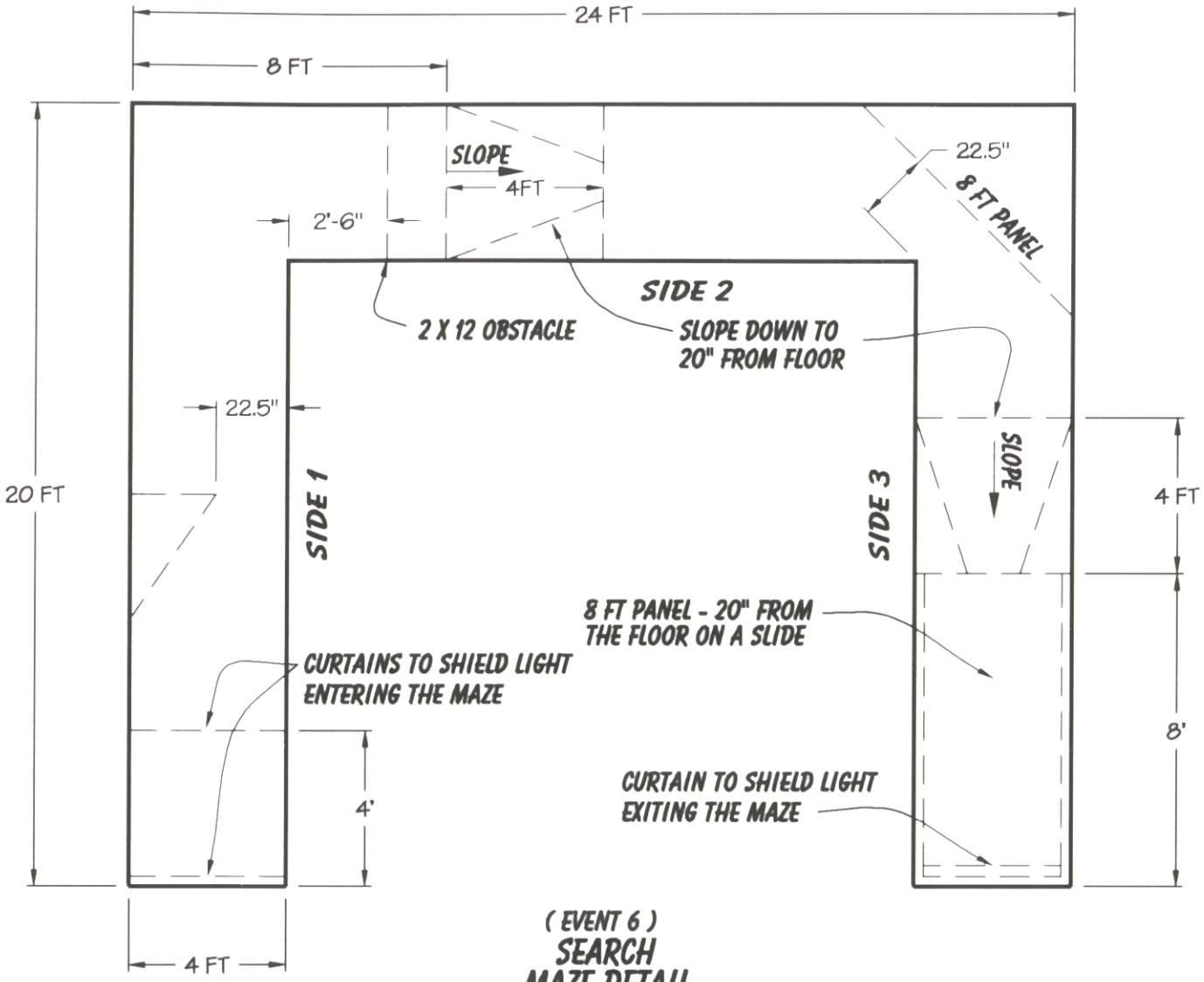

(EVENT 6)

SEARCH
MAZE DETAIL

1/4" = 1' - 0"

MAZE SHOULD BE 48" WIDE X 36" HT.

RESCUE
(EVENT 7)

TOP VEW

IAFF / IAFC
CPAT DETAILS EVENT 7

CEILING BREACH & PULL
(EVENT 8)

CEILING PULL
TOP VIEW

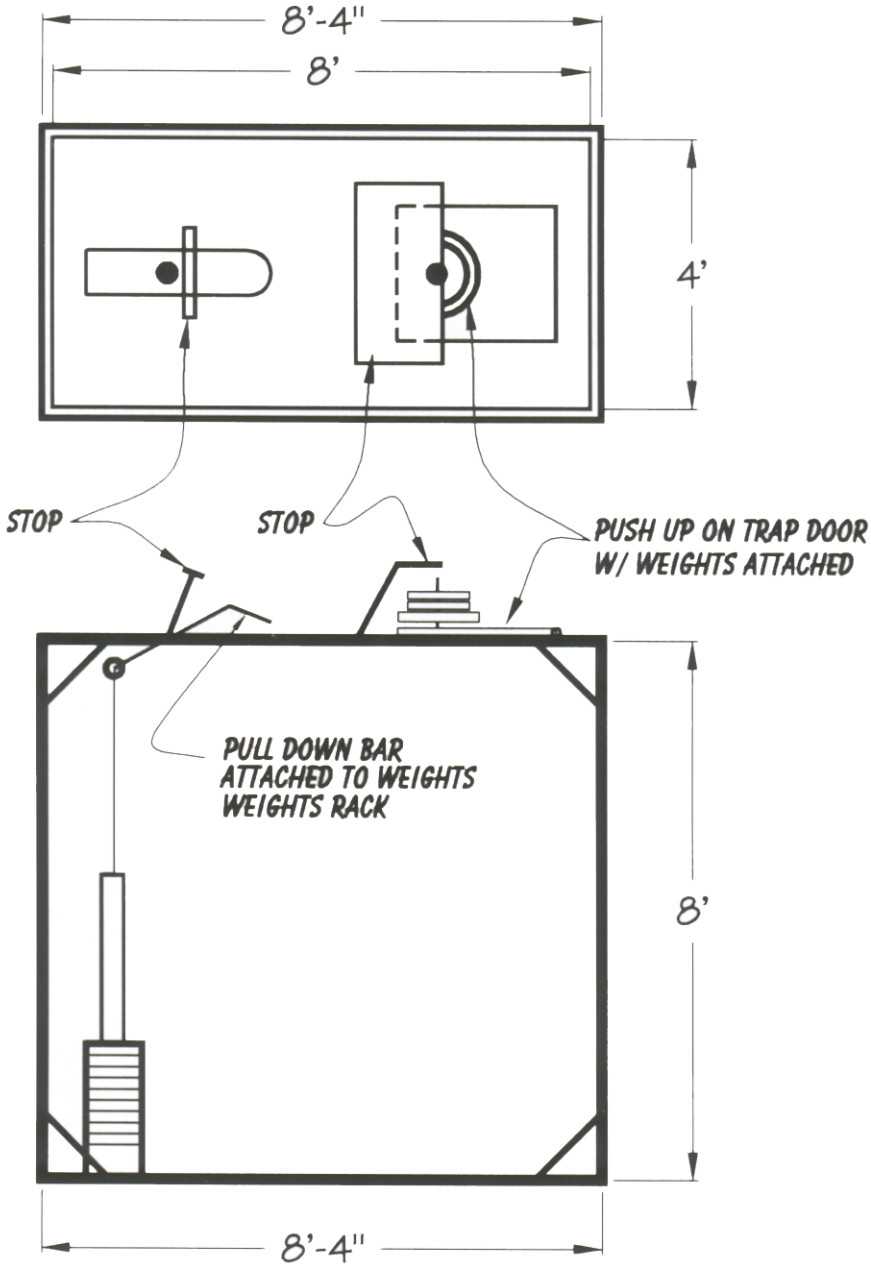

CEILING PULL
ELEVATION VIEW

APPENDIX E

CPAT TRANSPORTABILITY FORMS

DIRECTIONS
PHYSICALITY
CRITICALITY
EQUIPMENT AND DEMOGRAPHICS
SURVEY

COMPARATIVE RESULTS

PHYSICALITY
CRITICALITY
EQUIPMENT AND DEMOGRAPHICS

The Fire Service Joint Labor Management Wellness/Fitness Initiative

The International Association of Fire Fighters (IAFF), the International Association of Fire Chiefs (IAFC) and ten fire departments in the United States and Canada have joined together to identify critical and physically demanding tasks performed by entry level fire fighters. Our goal is to develop a fair and valid evaluation system in the selection of fire fighters to ensure that all fire fighter candidates possess the physical ability to complete critical tasks effectively and safely.

Your fire department and local IAFF union affiliate are in support of this project. You are one of 1,000 selected to participate in a survey regarding fire fighter job requirements. We need you to validate, based on your experience, the critical physical task skills that all fire fighters should possess. Your participation will provide a better understanding of the physical abilities necessary for the position of fire fighter.

Your response to the questionnaire and participation will be completely confidential. You are not required to state your name or provide any identifiers. You have been randomly selected and will remain anonymous. Your completed questionnaire will be collected and sent to IAFF headquarters where it will be compiled with the records of the participants from the other nine fire departments and statistically analyzed. None of the information you provide will be available to your fire department.

We have reviewed job descriptions and job analyses from each of the ten fire departments participating in this project. We then derived a list of 31 tasks to investigate. The attached survey questions directly relate to these 31 tasks.

Please rate each task on two scales based on your experience as a fire fighter. First, assess the critical nature of the task during a fire emergency. Second, assess the physical effort required while performing the task. Use the following scale:

<u>Criticality</u>
1 = Not Performed
2 = Least Critical (failure to perform results in no negative consequences.)
3 = Important (beneficial for the successful performance of the job.)
4 = Critical (essential for the successful performance of the job.)
5 = Extremely Critical (failure to perform results in extreme negative consequences.)

<u>Physical Effort</u>
1 = No effort
2 = Minimal physical effort
3 = Moderate physical effort
4 = Excessive physical effort
5 = Maximal physical effort

Thank you for your time and participation.

Candidate Physical Ability Survey

To ensure consistency with government studies, please provide the appropriate response to each question below. Please completely fill in the appropriate box with a number 2 pencil to each statement below.

1. What is your age?
   - 20 or under
   - 21 to 30
   - 31 to 40
   - 41 to 50
   - 51 or over

2. What is your gender?
   - Male
   - Female

3. What is your ethnic background?
   - African American
   - Hispanic
   - Native American
   - Asian/Pacific Islander
   - Caucasian

4. Rank
   - Firefighter
   - Lieutenant
   - Captain

5. Years of experience.
   - 1 - 4 yrs
   - 5 - 8 yrs
   - 9 - 12 yrs
   - 13 - 16 yrs
   - > than 16 yrs

P-1

Candidate Physical Ability Survey (Physical Effort)

Please rate according to your personal experience as a fire fighter. Assess the critical nature of the task performed during a fire emergency based on the following scale. Please completly fill in the appropriate box with a number 2 pencil to each statement below.

	No Effort	Minimal Physical Effort	Moderate Physical Effort	Excessive Physical Effort	Maximal Physical Effort
1. Wear full protective clothing and equipment, including SCBA					
2. Extend dry hoseline from fire apparatus to fire occupancy					
3. Enter through door using force					
4. Crawl through smoke filled structure pulling charged hoseline					
5. Remove ladder from fire apparatus, carry and place at structure					
6. Climb ladder carrying tools					
7. Remove equipment from fire apparatus and carry to scene					
8. Ventilate roof with power tools					
9. Ventilate roof with hand-held axe					
10. Climb stairs with high rise packs					
11. Hook up to hydrant					
12. Pull ceiling to check for fire extension					
13. Drag dry supply line from apparatus to hydrant					
14. Search for victim in fire occupancy with limited visibility					
15. Remove victim or injured partner from fire scene					
16. Extricate victim from vehicle					
17. Raise or lower equipment from windows					
18. Carry stretcher or gurney					
19. Move heavy objects to gain access to fire and or free trapped persons					
20. Extend, hold and support a charged attack line with flowing water					
21. Start power tools					
22. Walk along uneven/narrow surfaces (i.e. roof)					
23. Operate at elevated heights					
24. Pull self up and over an obstacle or into an opening					

(Continued on other side)

P-1

	No Effort	Minimal Physical Effort	Moderate Physical Effort	Excessive Physical Effort	Maximal Physical Effort
25. Remove debris from fire scene	☐	☐	☐	☐	☐
26. Climb fence or wall in full protective clothing with equipment	☐	☐	☐	☐	☐
27. Remove, carry and throw salvage covers to protect equipment	☐	☐	☐	☐	☐
28. Climb stairs in full protective clothing carrying fire fighter equipment	☐	☐	☐	☐	☐
29. Roll up hose and place on apparatus	☐	☐	☐	☐	☐
30. Advance charged attack line around obstacles while remaining stationary	☐	☐	☐	☐	☐
31. Operate fire extinguishers	☐	☐	☐	☐	☐

Candidate Physical Ability Survey (Criticality)

Please rate according to your personal experience as a fire fighter. Assess the critical nature of the task performed during a fire emergency based on the following scale. Please completely fill in the appropriate box with a number 2 pencil to each statement below.

	Not Performed	Least Critical	Important	Critical	Extremely Critical
1. Wear full protective clothing and equipment, including SCBA					
2. Extend dry hoseline from fire apparatus to fire occupancy					
3. Enter through door using force					
4. Crawl through smoke filled structure pulling charged hoseline					
5. Remove ladder from fire apparatus, carry and place at structure					
6. Climb ladder carrying tools					
7. Remove equipment from fire apparatus and carry to scene					
8. Ventilate roof with power tools					
9. Ventilate roof with hand-held axe					
10. Climb stairs with high rise packs					
11. Hook up to hydrant					
12. Pull ceiling to check for fire extension					
13. Drag dry supply line from apparatus to hydrant					
14. Search for victim in fire occupancy with limited visibility					
15. Remove victim or injured partner from fire scene					
16. Extricate victim from vehicle					
17. Raise or lower equipment from windows					
18. Carry stretcher or gurney					
19. Move heavy objects to gain access to fire and or free trapped persons					
20. Extend, hold and support a charged attack line with flowing water					
21. Start power tools					
22. Walk along uneven/narrow surfaces (i.e. roof)					
23. Operate at elevated heights					
24. Pull self up and over an obstacle or into an opening					
25. Remove debris from fire scene					

(Continued on other side)

P-1

	Not Performed	Least Critical	Important	Critical	Extremely Critical
26. Climb fence or wall in full protective clothing with equipment					
27. Remove, carry and throw salvage covers to protect equipment					
28. Climb stairs in full protective clothing carrying fire fighter equipment					
29. Roll up hose and place on apparatus					
30. Advance charged attack line around obstacles while remaining stationary					
31. Operate fire extinguishers					

This page is one part of the total Candidate Physical Ability Test program. The entire contents of this document are Copyright © 1999 by the IAFF and the proprietary rights of this document belong to the IAFF, the IAFC and the ten jurisdictions and local unions of the Task Force. The CPAT is a comprehensive program for fire department candidates and partial use of this document is prohibited. No part of this document may be copied without the consent of the IAFF, the copyright owner.

IAFF/IAFC Wellness/Fitness Initiative

Equipment and Demographic Survey

1. What is the dry weight of the full structural protective ensemble worn by your fire fighters (Please include protective coat, protective trouser, station uniform, helmet, boots, gloves and hood)?

   _____ pounds

2. What is the weight of the SCBA used by your Department with a full air cylinder, facepiece, and regulator? (Please include any standard attachments such as rope bags, mask bags, PASS devices, etc.)

   _____ pounds

   [If your department utilizes different manufacturers' SCBA's or multiple configurations of an SCBA, please provide data on the one unit used by the majority of your fire fighters.]

3. What is the weight of a full SCBA air cylinder used by your Department? (Please provide data on the one unit used by the majority of your fire fighters.)

   _____ pounds

4. What is the dry weight including the nozzle, of your Department's standard attack hose lines as they are carried on the apparatus (pre-connected lines)? Please complete all that apply:

1 1/2″ hose	_____ length	_____ pounds	_____ material
1 3/4″ hose	_____ length	_____ pounds	_____ material
2″ hose	_____ length	_____ pounds	_____ material
2 1/2″ hose	_____ length	_____ pounds	_____ material
3″ hose	_____ length	_____ pounds	_____ material

This page is one part of the total Candidate Physical Ability Test program. The entire contents of this document are Copyright © 1999 by the IAFF and the proprietary rights of this document belong to the IAFF, the IAFC and the ten jurisdictions and local unions of the Task Force. The CPAT is a comprehensive program for fire department candidates and partial use of this document is prohibited. No part of this document may be copied without the consent of the IAFF, the copyright owner.

5. What is the weight of your supply line, per length? Please complete all that apply:

3″ hose	_____ length	_____ pounds	_____ material
3 1/2″ hose	_____ length	_____ pounds	_____ material
4″ hose	_____ length	_____ pounds	_____ material
5″ hose	_____ length	_____ pounds	_____ material
___″ hard sleeve	_____ length	_____ pounds	_____ material

Other, please describe

6. What is the weight of your Department's hose clamp?

_____ pounds

7. What is the weight of any portable hydrant used by your Department?

_____ pounds

8. What is the weight of your standard portable master stream appliance?

_____ pounds, including stacked tips

_____ pounds, including variable stream tip

This page is one part of the total Candidate Physical Ability Test program. The entire contents of this document are Copyright © 1999 by the IAFF and the proprietary rights of this document belong to the IAFF, the IAFC and the ten jurisdictions and local unions of the Task Force. The CPAT is a comprehensive program for fire department candidates and partial use of this document is prohibited. No part of this document may be copied without the consent of the IAFF, the copyright owner.

9. What are the weights of the following handline nozzles as your Department uses them? (Please include pistol grips and shutoffs, if used.)

Booster _____ pounds

Forestry _____ pounds

1-1/2″ Peripheral _____ *pounds*

1-1/2″ Automatic _____ *pounds*

1-1/2″ Straight Tip, _____ *pounds*

2-1/2″ Peripheral _____ *pounds*

2-1/2″ Automatic _____ *pounds*

2-1/2″ Straight Tip _____ *pounds*

10. What is the weight of any detachable ladder master stream device in use, including stacked tips or variable stream nozzle:

_____pounds

11. What are the sizes, weights, and lengths of the ground ladders carried by your department? If multiple models of the same length of ladder are in use, please provide the information on the most common model.

a.	Straight Ladder	Straight Ladder	Straight Ladder
	_____ Length	_____ Length	_____ Length
	_____ Material	_____ Material	_____ Material
	_____ Weight	_____ Weight	_____ Weight
b.	Extension Ladder	Extension Ladder	Extension Ladder
	_____ Length	_____ Length	_____ Length
	_____ Material	_____ Material	_____ Material
	_____ Weight	_____ Weight	_____ Weight

This page is one part of the total Candidate Physical Ability Test program. The entire contents of this document are Copyright © 1999 by the IAFF and the proprietary rights of this document belong to the IAFF, the IAFC and the ten jurisdictions and local unions of the Task Force. The CPAT is a comprehensive program for fire department candidates and partial use of this document is prohibited. No part of this document may be copied without the consent of the IAFF, the copyright owner.

c. Bangor Ladder

_____ Length

_____ Material

_____ Weight

d. Pompier Ladder

_____ Length

_____ Material

_____ Weight

e. A-Frame Ladder

_____ Length

_____ Material

_____ Weight

f. Folding Ladder

_____ Length

_____ Material

_____ Weight

12. What is the weight of your standard hydrant wrench?

_____ pounds

This page is one part of the total Candidate Physical Ability Test program. The entire contents of this document are Copyright © 1999 by the IAFF and the proprietary rights of this document belong to the IAFF, the IAFC and the ten jurisdictions and local unions of the Task Force. The CPAT is a comprehensive program for fire department candidates and partial use of this document is prohibited. No part of this document may be copied without the consent of the IAFF, the copyright owner.

13. What is the weight of your halligan tool?

_____ pounds

14. What is the weight of your flathead axe?

_____ pounds

15. What is the weight of your sledgehammer?

_____ pounds

16. What is the weight of your chain saw?

_____ pounds

17. What is the weight of your circular saw?

_____ pounds

18. What is the weight and length of your two most common pike poles? (trash hooks, rakes, etc)

_____ length _____ length

_____ weight _____ weight

19. What is the weight of your pickhead axe?

_____ pounds

20. What is the weight of your dry-chemical fire extinguisher?

_____ pounds

This page is one part of the total Candidate Physical Ability Test program. The entire contents of this document are Copyright © 1999 by the IAFF and the proprietary rights of this document belong to the IAFF, the IAFC and the ten jurisdictions and local unions of the Task Force. The CPAT is a comprehensive program for fire department candidates and partial use of this document is prohibited. No part of this document may be copied without the consent of the IAFF, the copyright owner.

21. What are the two most common PPV and/or exhaust fans used by your Department?

_____ type _____ type

_____ pounds _____ pounds

22. What are the most common extrication tools used by your department? (Separately list the power plant and the accessories [ram, cutters, spreaders, etc.])

Power Plant: _____ manufacturer _____pounds

Ram (heaviest): _____ manufacturer _____pounds

Cutters: _____ manufacturer _____pounds

Spreaders: _____ manufacturer _____pounds

23. What is the weight and contents of your standard high-rise pack?

Contents: _____

_____

Total Weight: _____ 1 3/4″ _____2 1/2″

24. What hydrant appliance does your fire department use? (e.g. Humat valve, Blake, Hydra-assist, Hydrant Gate)

_____ manufacturer

_____ pounds

25. What is the weight of your stretcher or gurney?

_____ pounds

26. What is the weight of your back board?

_____ pounds

This page is one part of the total Candidate Physical Ability Test program. The entire contents of this document are Copyright © 1999 by the IAFF and the proprietary rights of this document belong to the IAFF, the IAFC and the ten jurisdictions and local unions of the Task Force. The CPAT is a comprehensive program for fire department candidates and partial use of this document is prohibited. No part of this document may be copied without the consent of the IAFF, the copyright owner.

27. What is the weight of your oxygen box? (patient oxygen and ventilation)

_____ pounds

28. What is the weight of your First Responder/BLS EMS box? (medical supplies, bandages, first aid))

_____ pounds

29. What is the weight of your ALS EMS box? (medical supplies, drugs, IV, airway, etc.)

_____ pounds

30. What is the weight of your Automatic External Defibrillator?

_____ pounds

31. What is the weight of your thumper (mechanical CPR device)?

_____ pounds

32. What is the weight of your electrical cord reels, if portable?

_____ pounds

33. What is the weight of your portable scene lighting?

_____ pounds

34. What are the dimensions and weight of your typical salvage covers?

_____ dimensions

_____ pounds

35. What is the total weight of personal issue equipment carried by fire fighters as a part of their structural protective clothing (personal ropes, extra gloves, spring-loaded center punch, dykes, flashlight, etc.):

_____ pounds

This page is one part of the total Candidate Physical Ability Test program. The entire contents of this document are Copyright © 1999 by the IAFF and the proprietary rights of this document belong to the IAFF, the IAFC and the ten jurisdictions and local unions of the Task Force. The CPAT is a comprehensive program for fire department candidates and partial use of this document is prohibited. No part of this document may be copied without the consent of the IAFF, the copyright owner.

36. What is the total weight of the standard rescue rope bag used by your department (include weight of rope and all associated hardware and harnesses):

_____ pounds

37. What is the total weight of the largest rescue air bag used by your department:

_____ pounds

38. What is the average riser height (stair step) in your jurisdiction? (Check local building codes.)

_____ inches (Residential Occupancy)

_____ inches (Commercial Occupancy)

39. What is the average building height within your jurisdiction?

_____ floors

40. What is the average weight of fire fighters within your department?

_____ pounds

41. What is the average weight of adult hospital patients? *[Contact one hospital within your jurisdiction]*

Emergency Room Patient _____ pounds

Admitted Hospital Patient _____ pounds

42. What is the average distance between hydrants within your jurisdiction?

_____ feet

43. What is the average square footage of single family residence within your jurisdiction?

_____ square feet

This page is one part of the total Candidate Physical Ability Test program. The entire contents of this document are Copyright © 1999 by the IAFF and the proprietary rights of this document belong to the IAFF, the IAFC and the ten jurisdictions and local unions of the Task Force. The CPAT is a comprehensive program for fire department candidates and partial use of this document is prohibited. No part of this document may be copied without the consent of the IAFF, the copyright owner.

For the purposes of any needed follow-up on this survey please provide the following information:

Who completed this form?

Name: _____

Rank (Position): _____

Address: _____

_____

_____

_____

Phone Number: _____

Fax Number: _____

E-mail address: _____

WFI Task Force Jurisdictions
Comparative Results
Criticality and Phsyicality

QUESTIONS	CRITICAL RATING	PHYSICAL RATING	QUESTIONS	CRITICAL RATING	PHYSICAL RATING
1. Wear full protective clothing and equipment, including SCBA	4.78	3.11	17. Raise or lower equipment from windows	3.41	3.19
2. Extend dry hose line from fire apparatus to fire occupancy	4.3	3.08	18. Carry stretcher or gurney	3.47	3
3. Enter through door using force	3.87	3.58	19. Move heavy objects to gain access to fire and or free trapped persons	4.26	4.25
4. Crawl through smoke filled structure pulling charged hose line	4.45	4.09	20. Extend, hold and support a charged attack line with flowing water	4.45	3.85
5. Remove ladder from fire apparatus, carry and place at structure	4.02	3.25	21. Start power tools	3.88	2.51
6. Climb ladder carrying tools	3.9	3.18	22. Walk along uneven/narrowsurfaces (i.e. roof)	3.68	2.58
7. Remove equipment from fire apparatus and carry to scene	3.94	2.85	23. Operate at elevatedheights	3.95	2.67
8. Ventilate roof with power tools	4.14	3.57	24. Pull self up and over an obstacle or into an opening	3.99	3.71
9. Ventilate the roof with hand-held axe	3.7	4.4	25. Remove debris from fire scene	3.13	2.99
10. Climb stairs with high rise packs	4.01	4.07	26. Climb fence or wall in full protective clothing with equipment	3.42	3.84
11. Hook up to hydrant	4.28	2.5	27. Remove, carry and throw salvage covers to protect equipment	3.08	2.65
12. Pull ceilling to check for fire extension	4.13	3.53	28. Climb stairs in full protective clothing carrying fire fighter equipment	4.21	4
13. Drag dry supply line from apparatus to hydarnt	3.97	3.16	29. Roll up hose and place on apparatus	3.09	2.49
14. Search for victim in fire occupancy with limited visibilty	4.71	3.86	30. Advance charged attack line around obstacles while remaining stationary	3.75	3.73
15. Remove victim or injured partner from fire scene	4.8	4.7	31. Operate fire extinguishers	3.46	2.11
16. Extricate victim from vehicle	4.39	3.6			

WFI Task Force Jurisdictions' Comparative Results - Equipment and Demographics

JURISDICTION	AUSTIN	CALGARY	CHARLOTTE	FAIRFAX COUNTY	INDIANAPOLIS	LOS ANGELES COUNTY	MIAMI DADE	NEW YORK CITY	PHOENIX	SEATTLE
1. Weight of protective ensemble in pounds.	33 lbs	21 lbs	21 lbs	25 lbs	35 lbs	29 lbs	35 lbs	40 lbs	24 lbs	28 lbs
2. Weight of SCBA in pounds.	30 lbs	29 lbs	25 lbs	26 lbs	26 lbs	29 lbs	32 lbs	32 lbs	32 lbs	25 lbs
3. Weight of full SCBA cylinder in pounds.	14.5 lbs	17 lbs	8 lbs	16 lbs	15 lbs	16 lbs	15 lbs	14.5 lbs	15 lbs	15 lbs
including nozzle of standard attack lines.										
a. 1 1/2	a. N/A	a. 50'/ 20 lbs/ rubber	a. N/A	a. N/A	a. N/A	a. 50'/ 19 lbs/ syn	a. 50'/ 20 lbs/ rubber	a. N/A	a. 150'/ 68 lbs/ rubber	a. N/A
b. 1 3/4	b. 50'/ 19 lbs/ cloth	b. 200'/ 89 lbs/ rubber	b. 50'/25 lbs/rubber	b. 50'/ 16 lbs/ rubber	b. 50'/ 23 lbs/ nylon	b. 50'/ 22 lbs/ syn	b. 200'/ 90 lbs/ rubber	b. 50'/ 21 lbs/ rubber	b. 150'/ 70 lbs/ rubber	b. 100'/ 44 lbs/ nylon
c. 2	c. 50'/ 21 lbs/ cloth	c. N/A	c. N/A	c. N/A	c. N/A	c. N/A	c. N/A	c. N/A	c. 200'/ 128 lbs/ rubber	c. N/A
d. 2 1/2	d. N/A	d. 50'/ 56 lbs/ rubber	d. 50'/33 lbs/rubber	d. 50'/ 26 lbs/ rubber	d. 50'/ 35 lbs/ nylon	d. 50'/ 27 lbs/ syn	d. 250'/ 165 lbs/ syn	d. 50'/ 32 lbs/ rubber	d. 250'/ 164 lbs/ rubber	d. 100'/ 60 lbs/ nylon
	e. N/A	e. N/A	e. N/A	e. 50'/ 30 lbs/ rubber	e. N/A	e. N/A	e. N/A	e. 50'/ 55 lbs/ rubber	e. N/A	e. N/A
of your supply lines.				a. 50'/ 46 lbs/ cotton double jacket						
a. 3	a. 100'/ 69 lbs/ synthetic	a. 50'/ 59 lbs/ rubber	a. N/A	b. N/A	a. 50'/ 38 lbs/ vinyl	a. N/A	a. N/A	a. N/A	a. N/A	a. N/A
b. 3 1/2	b. N/A	b. 50'/ 36 lbs/ rubber	b. N/A	c. N/A	b. N/A	b. N/A	b. N/A	b. 50'/ 59 lbs/ rubber	b. N/A	b. N/A
c. 4	c. N/A	c. N/A	c. 100'/86 lbs/ rubber	d. N/A	c. N/A	c. 50'/ 45 lbs/ rubber	c. N/A	c. N/A	c. 50'/ 52 lbs/ rubber	c. 50'/ 60 lbs/ nylon
d. 5	d. 100'/109 lbs/synthetic	d. 100'/ 97 lbs/ rubber	d. 100'/119 lbs/rubber	e. 5"/ 10'/ 70 lbs/ rubber	d. 100'/ 200 lbs/ vinyl	d. N/A	d. 100'/ 130 lbs/ rubber	d. 35'/ 47 lbs/ rubber	d. N/A	d. N/A
e. Hard sleeve	e. 10'/ 85 lbs/ rubber	e. N/A	e. 6"/ 10'/ 25 lbs/ rubber	f. N/A	e. N/A	e. 4"/ 10'/ 57lbs/ rubber	e. 4"/ 10'/ 60lbs/ rubber	e. 100'/ 110 lbs/ rubber	e. N/A	e. 10'/ 138 lbs/ rubber
f. Other	f. N/A	f. N/A	f. N/A		f. N/A	f. N/A	f. N/A	f. N/A	f. N/A	f. N/A
6. Weight of hose clamp in pounds.	15 lbs	8 lbs/ average hose 24 lbs/ 5" hose	7lbs	10 lbs	20 lbs	23 lbs	22 lbs	27 lbs	24 lbs	32 lbs
7. Weight of portable hydrant in pound	56 lbs	N/A	N/A	N/A	N/A	N/A	56 lbs	200 lbs	31 lbs	26 lbs
8. Weight of portable master stream appliance.										
a. Stacked tips	a. 37.5 lbs	a. 44 lbs	a. 30 lbs	a. 38 lbs	a. 40 lbs	a. 48.5 lbs	a. 49 lbs	a. 62 lbs	a. 39 lbs	a. 24 lbs
b. Variable stream tip	b. 55 lbs	b. 53 lbs	b. 34 lbs	b. 41 lbs	b. N/A	b. 53.5 lbs	b. 54 lbs	b. 67 lbs	b. 46 lbs	b. N/A
9. Weight of handline nozzles in pounds.	a. 4.5 lbs	a. N/A	a. 3 lbs	a. 5 lbs	a. 4 lbs	a. 2.5 lbs	a. 5 lbs	a. 3 lbs	a. 6 lbs	a. N/A
a. Booster	b. 3/4 lbs	b. .5 lbs	b. N/A	b. 1 lbs	b. N/A	b. 1 lbs	b. 1 lbs	b. N/A	b. N/A	b. N/A
b. Forestry	c. 7 lbs	c. 4 lbs	c. 4 lbs	c. 11 lbs	c. 9 lbs	c. N/A	c. 6 lbs	c. 5 lbs	c. 6 lbs	c. 5.5 lbs
c. 1 1/2 Peripheral	d. 8.5 lbs	d. 5 lbs	d. 5 lbs	d. 7 lbs	d. 6 lbs	d. 7 lbs	d. N/A	d. 6 lbs	d. N/A	d. 5.5 lbs
d. 1 1/2 Automatic	e. 8.5 lbs	e. N/A	e. N/A	e. 6 lbs	e. 3.5 lbs	e. N/A	e. 8 lbs	e. 3 lbs	e. 8 lbs	e. N/A
e. 1 1/2 Straight Tip	f. 11.5 lbs	f. 20 lbs	f. 7.5 lbs	f. 12 lbs	f. N/A	f. N/A	f. 16 lbs	f. 7.5 lbs	f. 16 lbs	f. 8 lbs
f. 2 1/2 Peripheral	g. 7.5 lbs	g. N/A	g. 8.75 lbs	g. 8 lbs	g. N/A	g. 11 lbs	g. N/A	g. 8 lbs	g. N/A	g. 8.5 lbs
10. Weight of detachable ladder master stream in pounds.	h. 6.5 lbs	h. 3 lbs	h. 6.5 lbs	h. 7 lbs	h. 9 lbs	h. 7 lbs	h. 14 lbs	h. 4 lbs	h. 14 lbs	h. N/A
	39.5 lbs	92 lbs	N/A	40 lbs	N/A	60 lbs	N/A	29 lbs	N/A	40 lbs
11. Length, weight, and material in pounds of your departments ladders.	a. 14'/ 34 lbs/ aluminum 16'/ 50 lbs/ aluminum 20'/ 62 lbs/ aluminum	a. 14'/30 lbs/aluminum 16'/55 lbs/aluminum 20'/62 lbs/aluminum	a. 14 '/42 lbs/aluminum 16'/48 lbs/aluminum	a. 14'/ 38 lbs/ aluminum 16'/ 42 lbs/ aluminum	a. 14'/ 49 lbs/ aluminum 16'/ 52 lbs/ aluminum 20'/ 62 lbs/ aluminum	a. 16 '/49.5 lbs/wood 20'/63 lbs/wood 24'/76 lbs/wood	a. 14 '/34 lbs/Aluminum 16'/50 lbs/Aluminum 20'/62 lbs/Aluminum	a. 12'/ 39 lbs/ Aluminum 16'/ 52 lbs/ Aluminum 20/ 59 lbs/ Aluminum	a. 14'/ 46 lbs/ fiberglass 16'/ 56 lbs/ fiberglass	a. 12'/ 25 lbs/ aluminum 14'/ 30 lbs/ aluminum 16'/ 35 lbs/ aluminum
a. Straight Ladder	b. 24'/ 97 lbs/ aluminum	b. 24'/72 lbs/aluminum	b. 24'/75 lbs/aluminum	b. 24'/ 38 lbs/ aluminum	b. 28'/ 107 lbs/ aluminum	b. 24'/102 lbs/wood	b. 24'/98 lbs/Aluminum	b. 16'/ 79 lbs/ Aluminum	b. 24'/ 110 lbs/ fiberglass	b. 24'/ 75 lbs/ aluminum
b. Extension Ladder	28'/ 107 lbs/ aluminum	24'/92 lbs/aluminum	35'/170 lbs/aluminum	35'/ 138 lbs/ aluminum	35'/ 134 lbs/ aluminum	35'/158 lbs/wood	28'/103 lbs/Aluminum	24'/ 114 lbs/ Aluminum	35'/ N/A/ fiberglass	26'/ 90 lbs/ aluminum
c. Bangor Ladder	35'/ 134 lbs/ aluminum	c. 35'/ 182 lbs/ aluminum	c. 40'/ 220 lbs/ aluminum	c. N/A	40'/ 211 lbs/ aluminum	c. N/A	35'/135 lbs/Aluminum	35/150 lbs/Aluminum	c. 14'/ 43 lbs/ fiberglass	35'/ 130 lbs/aluminum
d. Pompier Ladder	c. 40'/ 190 lbs/ aluminum	d. N/A	d. 14'/ 45 lbs/ aluminum	d. N/A	c. N/A	d. 14'/ 38.25 lbs/ wood	c. 50'/ 250 lbs/ Aluminum	c. 24'/ 74 lbs/ Aluminum	d. N/A	c. 50'/ 250 lbs/ aluminum
e. A-Frame	d. N/A	e. 10'/ 38 lbs/ aluminum	e. 12'/ 29 lbs/ aluminum	e. 9'/ 43 lbs/ aluminum	d. N/A	e. N/A	d. N/A	d. N/A	e. N/A	d. N/A
f. Folding Ladder	e. 14'/ 32 lbs/ aluminum	f. 10'/ 18 lbs/ aluminum	f. 10'/ 14 lbs/ aluminum	f. 10'/ 15 lbs/ aluminum	e. 5'6"/ 30 lbs/ aluminum	f. 10'/ 18 lbs/ wood	e. 14'/ 32 lbs/ Aluminum	e. 14'/32 lbs/Aluminum	f. 10'/ 18 lbs/ wood	e. N/A
12. Weight of hydrant wrench in pound	5.2 lbs	4.5 lbs	3 lbs	5 lbs	7 lbs	2.5 lbs	5 lbs	5 lbs	5 lbs	13 lbs
13. Weight of halligan tool in pounds.	14 lbs	12 lbs	6 lbs	10 lbs	10 lbs	7.5 lbs	12 lbs	12 lbs	12 lbs	11 lbs
14. Weight of flathead axe in pounds.	7.5 lbs	10 lbs	5 lbs	7 lbs	6 lbs	7 lbs	6 lbs	8 lbs	6 lbs	9 lbs
15. Weight of sledgehammer in pound	13 .5 lbs	10 lbs	8 lbs	12 lbs	15 lbs	12 lbs	12 lbs	12 lbs	10 lbs	12 lbs
16. Weight of chain saw in pounds.	21.5 lbs	16 lbs	15 lbs	17 lbs	18 lbs	21 lbs	24 lbs	16 lbs	24 lbs	24 lbs
17. Weight of circular saw in pounds.	34 lbs	36 lbs	35 lbs	23 lbs	25 lbs	26 lbs	34 lbs	33 lbs	30 lbs	18 lbs
18. Length and weight of pike poles.	4'/ 5 lbs 8'/ 6.5 lbs	7'/ 7 lbs 12'/ 11 lbs	6'/ 4 lbs 8'/ 6 lbs	6'/ 7 lbs 6'/ 5 lbs	6'/ 5 lbs 10'/ 6.5 lbs	4'/6 lbs 6'/8 lbs	6'/ 8 lbs 10'/13 lbs	6'/ 8 lbs 10'/13 lbs	6'/ 6 lbs 10'/ 8 lbs	6'/ 9 lbs 8'/ 7 lbs
19. Weight of pickhead axe in pounds.	8 lbs	9 lbs	7 lbs	8 lbs	6 lbs	7 lbs	8 lbs	10 lbs	9 lbs	9 lbs
20. Weight of dry-chemical fire extinguisher in pounds.	41 lbs	36 lbs	18 lbs	40 lbs	30 lbs	35 lbs	30 lbs	30 lbs	49 lbs	39 lbs
21. Type and Weight of PPV exhaust fans.	18" Tempest PPV/ 61 lbs 24" Tempest PPV/ 78 lbs	Gas PPV/ 86 lbs Electric PPV/ 54 lbs	Gas PPV/ 69 lbs Electric PPV/ 25 lbs	Tempest PPV/ 70 lbs Electric PPV/ 44 lbs	Tempest PPV/ 65 lbs	Unifire PPV/ 80 lbs	Tempest PPV/ 70 lbs Gas PPV/ 70 lbs	Exhaust PPV/ 70 lbs	SuperVac PPV/ 88 lbs	Electric PPV/ 50 lbs Gas PPV/ 70 lbs
22. Weight of hydraulic extraction tools.										
a. Power plant	a. Amkus/ 105 lbs	a. Amkus/ 108 lbs	a. Hurst/ 45 lbs	a. Hurst/ 62 lbs	a. Hurst/ 65 lbs	a. Amkus/ 100 lbs	a. Amkus/ 100 lbs	a. Hurst/ 83 lbs	a. Hurst/ 58 lbs	a. TNT Rescue System/ 44 lbs
b. Ram	b. Amkus/ 31.5 lbs	b. Amkus/ 44 lbs	b. Phoenix/ 40 lbs	b. Hurst/ 40 lbs	b. Hurst/ 41 lbs	b. Amkus/ 21 lbs	b. Amkus/ 21 lbs	b. Hurst/ 25 lbs	b. Hurst/ 45 lbs	b. Amkus/ 45 lbs
c. Cutters	c. Amkus/ 29.5 lbs	c. Amkus/ 29 lbs	c. Hurst/ 35 lbs	c. Hurst/ 40 lbs	c. Code 3/ 39 lbs	c. Amkus/ 25 lbs	c. Amkus/ 30 lbs	c. Hurst/ 38 lbs	c. Hurst/ 48 lbs	c. Amkus/ 30 lbs
d. Spreaders	d. Amkus/ 47.5 lbs	d. Amkus/ 47 lbs	d. Hurst/ 35 lbs	d. Hurst/ 74 lbs	d. Hurst/ 70 lbs	d. Amkus/ 46 lbs	d. Amkus/ 46 lbs	d. Hurst/ 73 lbs	d. Hurst/ 78 lbs	d. Amkus/ 38 lbs
23. Contents and weight of high-rise pack.										
a. 1 3/4		a. 50'/ hose spanner/ 25 lbs	a. 100'/ with nozzle/ 20lbs	a. 150'/ 2"/ 76 lbs	a. 100'/ y gated/ 69 lbs	a. 100'/ elkhart nozzle/ 45 lbs	a. 100'/ elkhart nozzle/ 45 lbs		a. 75'/ automatic nozzle/ 37 lbs	a. 200'/ 1 3/4 nozzle/ 94 lbs
b. 2 1/2		b. N/A	b. 50'/ with gates Y/ 28 lbs	b. 5'/ 51 lbs	b. N/A	b. 50'/ stack tip nozzle/ 35 lbs	b. 50'/ stack tip nozzle/ 28lbs	see handout	b. N/A	b. N/A
24. Manufacturer and weight of your hydrant appliance.	N/A	Akron/7 lbs	N/A	Hydrant Gate/ 13 lbs	N/A	33 lbs	Akron/ 16 lbs	Akron/ 16 lbs	Humat/ 31 lbs	6 lbs
25. Weight of gurney in pounds.	87 lbs	80 lbs	N/A	80 lbs	40 lbs	N/A	60 lbs	60 lbs	84 lbs	60 lbs
26. Weight of backboard in pounds.	18 lbs	14 lbs	8 lbs	16 lbs	4 lbs	15 lbs	12 lbs	16 lbs	16 lbs	19 lbs
27. Weight of oxygen box in pounds.	N/A	N/A	21 lbs	30 lbs	14 lbs	19 lbs	20 lbs	12 lbs	28 lbs	15 lbs
28. Weight of BLS EMS box in pounds	29 lbs	31 lbs	15 lbs	20 lbs	10 lbs	14 lbs	20 lbs	14 lbs	21 lbs	28 lbs
29. Weight of ALS EMS box in pounds	N/A	N/A	N/A	26 lbs	10 lbs	22 lbs	22 lbs	22 lbs	32 lbs	35 lbs
30. Weight of automatic external defibrillator.	19 lbs	9 lbs	4 lbs	31 lbs	13 lbs	22 lbs	18 lbs	12 lbs	18 lbs	25 lbs
31. Weight of thumper in pounds.	N/A	N/A	N/A	N/A	N/A	N/A	48 lbs	N/A	49 lbs	N/A
32. Weight of electrical cord in pounds	N/A	21 lbs	8 lbs	45 lbs	15 lbs	N/A	30 lbs	32 lbs	N/A	30 lbs
33. Weight of portable lighting in pounds.	9.5 lbs	6 lbs	4 lbs	21 lbs	8 lbs	11 lbs	16 lbs	9 lbs	14 lbs	18 lbs
34. Dimensions and weight of average salvage covers.	14 x 18/ 19 lbs	10' x 15'/ 20 lbs	10' x 12'/ 2 lbs	12' x 12'/ 13 lbs	16' x 20'/ 5 lbs	16' x 12'/ 27 lbs	16' x 12'/ 30 lbs	9' x 55'/ 100 lbs	18' x 18'/ 18 lbs	12' x 18'/20 lbs
35. Total weight of personal issue equipment.	N/A	4 lbs	3 lbs	3 lbs	N/A	10 lbs	10 lbs	10 lbs	6 lbs	5 lbs
36. Weight of rescue rope bag in poun	52 lbs	40 lbs	45 lbs	28 lbs	25 lbs	42 lbs	45 lbs	22 lbs	8 lbs	18 lbs
37. Weight of largest rescue air bag in pounds.	25 lbs	18 lbs	40 lbs	N/A	60 lbs	72 lbs	60 lbs	60 lbs	17 lbs	28 lbs
38. Riser height.										
a. Residential	a. 6 inches	a. 4.9 inches	a. 6 inches	a. 8 inches	a. N/A	a. N/A	a. 7 inches	a. 7 inches	a. 7 inches	a. 8 inches
b. Commercial	b. 6 inches	b. 7.8 inches	b. 7 inches	b. 8 inches	b. N/A	b. 7 inches	b. 7 inches	b. 7 inches	b. 7 inches	b. 8 inches
39. Average building height.	N/A	3 floors	3 floors	2 floors	10 floors	1.5 floors	6 floors	6 floors	1 floor	2 floors
40. Average weight of fire fighter.	196 lbs	199 lbs	175 lbs	185 lbs	185 lbs	N/A	190 lbs	210 lbs	191 lbs	195 lbs
41. Average weight of adult patient										
a. Emergency room patient		a. 160 lbs	a. 178 lbs	a. 150 lbs	a. 170 lbs	a. 191 lbs	a. 180 lbs	a. 180 lbs		
b. Admitted patient	N/A	b. 175 lbs	b. 178 lbs	b. 150 lbs	b. 170 lbs	b. 182 lbs	b. 180 lbs	b. 185 lbs	N/A	N/A
42. Average distance between hydrant	500'-600'	1000'	1000'	750'	300'	350'	500'	250'	500'	400'
43. Average sq. footage of single family residence.	2000 sq'	1200 sq'	2000 sq'	2600 sq'	1500 sq'	1128 sq'	2000 sq'	1200 sq'	2000 sq'	1800 sq'

APPENDIX F

IAFF AND EEOC CONCILIATION AGREEMENT

Fire Service
Joint Labor Management
Wellness/Fitness Initiative

TO: All IAFF/IAFC CPAT Licensees

FROM: Harold A. Schaitberger, General President, IAFF

RE: IAFF / EEOC Conciliation Agreement and CPAT

DATE: June 5, 2006

On April 24, 2006, the U.S. Equal Employment Opportunity Commission (EEOC) entered into a conciliation agreement with the IAFF that resolves a charge of discrimination brought against the IAFF in 2002 alleging that the Candidate Physical Ability Test (CPAT) had a discriminatory impact on female candidates. Under this agreement, the EEOC will not take any further action against the IAFF with respect to the charge itself, and will not file a lawsuit against the IAFF based upon any similar charge during the agreement's five (5) year term.

The EEOC has also agreed that it will not file a lawsuit during the term of this agreement based upon a claim that the CPAT has a discriminatory impact on female candidates against any fire department that utilizes the CPAT in conformity with these changes.

Pursuant to this agreement, the IAFF-IAFC Fire Service Joint Labor Management Wellness/Fitness Task Force is making certain changes to the CPAT program manual that are designed to increase the rate at which female fire fighter candidates pass the test. Consistent with these changes, any IAFF/IAFC CPAT Licensee (Licensee) wishing to utilize the CPAT as a condition of hire must provide all candidates an opportunity to attend at least two CPAT orientation sessions within the eight (8) week period preceding the test. During these sessions, the candidates will receive "hands-on" familiarity with the test apparatus, and receive guidance on specific conditioning regimens and techniques to help them prepare for the test. Guidance for conducting these orientation sessions is included in the original CPAT manual. Within thirty (30) days prior to the test itself, Licensees must also ensure that each candidate is given an opportunity to perform two (2) timed practice runs of the CPAT.

While the orientation and practice programs described above must be treated as a mandatory condition for candidates taking the CPAT, Licensees may excuse candidates from these conditions upon receiving a written and signed waiver from the candidate. This waiver must acknowledge that the orientation and practice program was made available to all candidates on an equal basis, and indicate that the candidate expressly waives, on a knowing and voluntary basis, the opportunity to participate in the orientation and practice program. This feature of the conciliation agreement is intended to address the particular circumstances that are likely to be encountered by large fire departments in administering the pre-test conditions to a large pool of candidates. By obtaining waivers from candidates who do not want or need the pre-test programs, Licensees should be able to reduce the number of candidates to whom these programs must be administered.

The IAFF will collect data from Licensees utilizing the CPAT regarding the pass-fail rates of female candidates during the term of the agreement. While the IAFF is required to provide this data to the EEOC to allow it to assess the effectiveness of the modifications in addressing the impact of the CPAT on female candidates, the IAFF will not be required to disclose to the EEOC the identity of any particular Licensee from which the data was obtained, and will only provide this data to the EEOC in an aggregated and redacted format.

The IAFF-IAFC Fire Service Joint Labor Management Wellness/Fitness Task Force is in the final stages of issuing a new edition of the CPAT manual, and this manual will formally incorporate all of the terms of the conciliation agreement. Any fire department wishing to take advantage of the conciliation agreement (and the EEOC's agreement not to bring suit, as referenced above), however, should incorporate these changes in their pre-test programs as soon as reasonably possible. For those fire departments that are utilizing another Licensee to conduct their CPAT, the fire department, as the employer, must ensure that these changes are incorporated.

Should you have any questions regarding the matters discussed above, please do not hesitate to contact the IAFF Division of Occupational Health, Safety and Medicine.

1750 NEW YORK AVENUE, N.W., WASHINGTON, DC 20006-5395 • (202) 737-8484 • (202) 737-8418 (FAX)

CONCILIATION AGREEMENT

In the Matter of:
U.S. Equal Employment Opportunity Commission
and
Charge No. 31C A0 0865

Charging Party

International Association of Fire Fighters
1750 New York Avenue, N. W.
Washington, D. C. 20006-5395

Respondent

An investigation having been made under Title VII of the Civil Rights Act of 1964, as amended by the U.S. Equal Employment Opportunity Commission (EEOC) and reasonable cause having been found by the Commission, the parties do resolve and conciliate this matter as follows:

GENERAL PROVISIONS

1. Respondent Subject to this Agreement - Although there are two Respondents named in the instant charge, this Agreement pertains to only to the International Association of Fire Fighters (hereinafter referred to as IAFF). Conciliation concerning the City of Austin was addressed in a separate Agreement.

2. Charging Party's Rights Preserved - The parties to this Agreement expressly agree that the person claiming to be aggrieved has not approved or signed this Agreement; that specific relief for the person claiming to be aggrieved is not provided for by the terms of this Agreement; and that all rights and protection afforded by Title VII of the Civil Rights Act of 1964, as amended, are preserved by the person claiming to be aggrieved.

3. Commission May Review Compliance With Agreement - Respondent agrees that EEOC may review compliance with this Agreement. As a part of such review, EEOC may require written reports regarding compliance, may inspect the Respondent's premises at reasonable times, interview employees, and examine and copy relevant documents.

4. Retaliation Prohibited - Respondent agrees that there shall be no discrimination or retaliation of any kind against any person because of opposition to any practice declared unlawful under Title VII of the Civil Rights Act of 1964, as amended, or because of the filing of a charge; giving testimony or assistance, or participating in any manner in any investigation, proceeding or hearing under Title VII.

5. Term of Agreement- This Agreement shall remain in full force and effect for five (5) years. By entering into this Agreement, the IAFF does not waive any defenses it has with respect to any claims brought by any party.

RELIEF

1. The IAFF agrees to implement the following changes in the orientation and preparation procedures set forth in the Candidate Physical Ability Test (CPAT) program manual, all of which are designed to eliminate or reduce the test's impact on females:

a. The manual will specify that fire departments administering the CPAT as a condition of hire must ensure that candidates are provided full and equal access to an orientation and practice program. This mandatory orientation and practice program shall commence at least eight (8) weeks before commencement of the official CPAT test dates, and shall be composed of two phases.

b. Under the first phase, fire departments utilizing the CPAT shall ensure that all candidates who are required to pass the CPAT as a condition of hire have full and equal opportunity to attend at least two (2) orientation sessions during which the candidates shall receive "hands on" familiarity with the actual CPAT apparatus. During the orientation sessions, Certified Peer Fitness Trainers, fitness professionals, and/or CPAT-trained fire fighters (proctors) shall familiarize all candidates with each task and apparatus, and shall advise all candidates concerning specific conditioning regimens and techniques to help them prepare for the CPAT.

c. Under the second phase, fire departments utilizing the CPAT shall ensure that all candidates who are required to pass the CPAT as a condition of hire have full and equal opportunity to perform at least two (2) timed practice runs of the CPAT, using CPAT apparatus. All of the required practice runs shall occur within thirty (30) days before the commencement of the official CPAT test dates. Following each practice session, Certified Peer Fitness Trainers, fitness professionals, and/or CPAT-trained fire fighters (proctors) shall help the candidates understand the test elements and how they can improve their

performance and conditioning.

2. The two-phased orientation and practice program set forth above shall be treated by the fire department as a mandatory condition for candidates taking the CPAT test. It is recognized that fire departments utilizing the CPAT are likely to have within their candidate pools candidates who are capable of passing the CPAT without attending the orientation and practice program, and that the resources devoted to the orientation and practice program are best spent on those candidates who will truly benefit from this assistance. The CPAT manual will therefore provide that the fire department may excuse candidates from this mandatory condition upon the receipt of a written and signed waiver from the candidate, in which the candidate acknowledges that this orientation and practice program was made available to all candidates on an equal basis, and in which the candidate expressly waives, on a knowing and wholly voluntary basis, the opportunity to participate in the orientation and practice program.

3. The IAFF agrees that, during the term of this Agreement, it will provide the EEOC with information necessary to allow the EEOC to verify that the foregoing changes have been made to the CPAT manual, and to conduct an analysis of the pass/fail rates of males and females and, as such, the effectiveness of the modifications to the testing procedures in eliminating or reducing the impact of the CPAT test on females. The IAFF will provide data on the pass-fail rates to the EEOC in an aggregate form, based upon information that is received by the IAFF from fire departments administering the CPAT. In order to encourage fire departments to provide this information to the IAFF, the IAFF will not be required to disclose to the EEOC the identity of any particular employer from which the data was obtained, but will provide the data in a redacted format that will enable the EEOC to assess the effectiveness of these modifications.

4. The EEOC agrees not to use the above-referenced charge as the jurisdictional basis for filing a lawsuit against the IAFF, and agrees, during the term of this Agreement, not to file a lawsuit based upon any similar charge against the IAFF based upon its involvement with the CPAT, or against any fire department that is utilizing the CPAT in conformity with the modifications mandated by this Agreement. However, nothing in this Agreement will be construed to preclude the EEOC from bringing suit to enforce this Agreement in the event that the IAFF fails to perform the promises and representations contained herein.

5. This Agreement is not admissible as evidence against the IAFF in any proceeding or any forum other than proceedings brought by the EEOC to enforce the terms of this Agreement.

REPORTING REQUIREMENTS

6. Report to District Director - Respondent agrees to report in writing to the District Director, Equal Employment Opportunity Commission, at 5410 Fredericksburg Road, Suite 200, San Antonio, Texas 78229, concerning the proper implementation of this Agreement.

SIGNATURES

I have read this Agreement and I accept and agree to its provisions.

4-14-06
Date

Kurt Rumsfeld
IAFF
Kurt Rumsfeld
Legal Counsel

Approved on Behalf of the Commission:

04-24-06
Date

Pedro Esquivel
Pedro Esquivel
Field Director