Ordinances Governing

CONSTRUCTION

in the

CITY OF ARLINGTON

TEXAS

Amended by Ordinance No. 18-017

(April 10, 2018)

(Chapter Designator: CONSTRUCTION)

ORDINANCE HISTORY

Number	Date of Adoption	Comments
88-82	06/07/88	
88-105	07/19/88	
89-43	04/18/89	
89-76	06/27/89	Revision of entire chapter; adoption of 1988 Uniform Building Code.
90-43	05/01/90	Amendment of **Article IX**, **Section 9.02**, Enclosure of Swimming Pools, Spas and Hot Tubs, relative to fence requirements.
90-112	11/27/90	Amendment of **Article VII, Section 7.09**, Presumption, relative to violations of location restrictions of signs on public property.
91-09	01/22/91	Amendment of **Section 4.03**, Application for Permit, by the addition of a new **Subsection (G)** and the renumbering of the remaining subsection; amendment of **Section 4.06**, Validity of Permit; and amendment of **Section 4.13**, Inspections, **Subsection (C)(3)**; relative to deed restrictions and real property restrictive covenants.
92-06	01/14/92	Amendment of **Section 1.04**, Amendments, Additions and Deletions, **Subsection (C)(13)**, providing for an exception to **Section 2516(g)(4)**, relative to the use of wood shingles and shakes as exterior wall coverings in Group R-1 occupancies.
92-35	04/07/92	Amendment of **Article IV, Section 4.01,** Registration, **Subsection (B)**, relative to contractor's public liability insurance.
92-62	06/16/92	Addition of **Article XVII**, Dangerous Buildings, providing for the definition of dangerous building;

ORDINANCE HISTORY

Number	Date of Adoption	Comments
		providing for a public hearing; providing for a civil penalty of up to $2,000 per day; and providing for abatement of dangerous buildings.
94-03	01/04/94	Repeal of **Article I** and adoption of new **Article I**, Building Code, relative to the adoption of the 1991 Uniform Building Code; Amendment of **Article IV**, **Section 4.04, Subsection (A)**, Plans and Specifications, relative to exceptions for submission of plans; Amendment of **Article IV, Section 4.05**, Building Permits Issued, relative to acceptance of plans and specifications; Amendment of **Article IV, Section 4.15**, Certificate of Occupancy, relative to issuance of certificates; Amendment of **Article VII, Section 7.05**, Unlawful Signs, relative to authority to remove signs; Amendment of **Article VII, Section 7.09**, Presumption, relative to prima facie evidence for violations; Amendment of **Article IX, Section 9.02**, Enclosure of Swimming Pools, Spas and Hot Tubs, relative to requirements and offenses; and the Addition of **Article XVIII**, Accessibility, relative to requirements of buildings and facilities for accessibility to the physically challenged.
95-18	02/14/95	Amendment of **Article VII** by the addition of **Section 7.10**, Temporary Signs Near Polling Places, to regulate the size of temporary signs near polling places.
96-93	07/02/96	Repeal of the existing **Article I** and adoption of a new **Article I**, Building Code, relative to the adoption of the **1994 Uniform Building Code** with certain deletions, amendments and addenda; Amendment of **Article II, Section 2.05**, Procedure, relative to the appointment of chairman and addition of a vice-chairman; Amendment of **Section 2.06**, Appeals; Time Limit, relative to making the ordinance gender neutral; Amendment of **Article III, Section 3.09**, Other

ORDINANCE HISTORY

Number	Date of Adoption	Comments
		Relocations, relative to making the ordinance gender neutral; Amendment of **Article IV, Section 4.01**, Registration, relative to the requirement of registration to construct or remove a sign, requirement for a notarized statement and the deletion of the requirement for contractor registration for minor accessory structures; Amendment of **Section 4.02**, Permits Required, relative to the requirement of a permit to construct or remove a sign; Amendment of **Section 4.03**, Application For Permit, **Subsection (F)**, relative to making the ordinance gender neutral; Amendment of **Section 4.04**, Plans and Specifications, relative to requiring computations be made available to the Building Official and changing the occupancy group "M" to "U"; Amendment of **Section 4.05**, Building Permits Issued, **Subsection (A)**, relative to the review of plans by certain City departments; Amendment of **Section 4.05(C)** relative to making the ordinance gender neutral; Amendment of **Section 4.07**, Expiration of Permit, relative to the fee for a new permit when the previous permit has expired due to suspension or abandonment of work; Amendment of **Section 4.12**, Refunds, relative to refunds of service charges; Amendment of **Section 4.13(C)**, Required Inspections, relative to making the ordinance gender neutral; Amendment of **Section 4.13(D)**, Other Inspections, relative to updating the section number to comply with the Uniform Building Code; Deletion of **Section 4.14**, Special Inspections, and the renumbering of **Section 4.15**, Certificate of Occupancy, to read as **Section 4.14**, Certificate of Occupancy, and creating exceptions to the use of occupancy requirements; by the renumbering of **Section 4.16**, Indemnification, to read as **Section 4.15**, Indemnification; Amendment of **Article VII, Section 7.02**, Identification of Signs, relative to deleting the requirement of posting the city permit on a sign; Amendment of **Section 7.04**,

ORDINANCE HISTORY

Number	Date of Adoption	Comments
		Maintenance, relative to deleting requirement of time requirements for painting of some signs; Amendment of **Section 7.06**, Location Restrictions, relative to providing authorization elsewhere in the code for signs; Amendment of **Section 7.07(B)**, Wind Pressure, relative to updating the section number to comply with the Uniform Building Code; Amendment of **Section 7.07(C)**, Working Stresses, relative to updating the section number to comply with the Uniform Building Code; Amendment of **Section 7.08**, Use of Plastic Materials, relative to the Uniform Building Code standards; Amendment of **Article IX, Section 9.01**, Barbed Wire Fence, relative to prohibiting razor wire fence within the city limits; Amendment of **Section 9.02**, Enclosure of Swimming Pools, Spas and Hot Tubs, relative to requiring compliance of swimming pool enclosures to meet the Texas Health and Safety Code and measurement of a wall around a swimming pool; Amendment of **Article XII, Section 12.01**, Sanitary Sewer Connection During Construction, relative to sanitary facilities for construction personnel; Amendment of **Article XIII, Section 13.02**, Prohibited Acts, **Subsection (C),** relative to changing "the" to "this"; Amendment of **Section 13.03**, Application for Permit, **Subsection (C),** relative to requirements of the Building Official; Amendment of **Section 13.08**, Permit Denial or Revocation Hearing, **Subsection (D)**, relative to making the ordinance gender neutral; Amendment of **Article XIV, Section 14.01**, Application and Permit Requirements, **Subsection (B)(2),** relative to making the ordinance gender neutral; Amendment of **Article XVI, Section 16.02**, Scope, relative to updating the table and section number to comply with the Uniform Building Code; Amendment of **Article XVII, Section 17.02**, Dangerous Building Defined, relative to changing the 1991 Edition of Uniform Code for the Abatement of Dangerous

ORDINANCE HISTORY

Number	Date of Adoption	Comments
		Building to read the 1994 Edition; Amendment of **Section 17.02(O)**, relative to making the ordinance gender neutral; Amendment of **Section 17.02(P)**, relative to making the ordinance gender neutral; Amendment of **Article XVIII,** entitled Accessibility, relative to accessibility standard requirements of the City.
96-145	11/05/96	Amendment of **Article I, Section 1.04**, Amendments, Additions and Deletions, **Subsection (C),** relative to fire restrictive construction and relative to safety glazing of glass and renumbering the remaining subsections.
97-90	07/01/97	Amend **Article I, Section 1.05**, Adoption of Appendices, by the deletion of **Appendix C**; amend **Article III, Section 3.02**, Application for Registration and Permits, at **Subsection (A),** Registration Information Required, by deletion of registration information that is in addition to the requirements as described in **Article IV;** delete **Section 3.05**, Notices To Be Given, and renumbering the remaining sections; amend **Article XIV**, by the deletion of **Section 14.02**, Bond Requirement; delete **Appendix "C"**.
97-107	07/29/97	Amend **Article I, Section 1.04,** Amendments, Additions, and Deletions, **Subsection (C)**, relative to Outdoor Swimming Pool Barriers and renumbering the remaining Subsections.
98-141	10/27/98	Repeal existing **Article I** and adopt a new **Article I**, Building Code, relative to the adoption of the **1997 Uniform Building Code** with certain deletions, amendments and addenda; Amend **Article III**, Moved Buildings, Amend **Section 3.09**, Inspections, relative to building mover requesting an inspection; Amend **Article IV**, Registration, Permits and Inspection,

ORDINANCE HISTORY

Number	Date of Adoption	Comments
		Section 4.01, Registration, **Subsection (B)**, relative to the applicant providing information; Amend **Section 4.01**, **Subsection (F)**, relative to authority of the Building Code Board; Amend **Section 4.01**, **Subsection (I)**, relative to construction of fences; Amend **Section 4.05**, Building Permits Issued, **Subsection (A)**, relative to making the ordinance gender neutral; Amend **Section 4.06**, Validity of Permit, relative to lawful work or use; Amend **Section 4.14**, Certificate of Occupancy, **Subsection (C)**, relative to requirement for inspection and information provided; Amend **Article VI**, Prefabricated or Modular Buildings, by amending **Section 6.01**, General, relative to building inspection review; Amend **Article VII**, Signs, **Section 7.05**, Unlawful Signs, **Subsection (A)**, relative to violation of any city code; Amend **Section 7.07**, Structural Requirements, **Subsection (C)(1),** relative to working stresses; Amend **Article XIII**, Outdoor Festivals, **Section 13.03**, Application for Permit, **Subsection (C)(8)**, relative to violation to the Health and Safety Code; Amend **Section 13.04**, Reports, **Subsection (B)**, relative to written reports to the building official; Amend **Section 13.06**, Denial of Permit; Grounds, **Subsection (A)(3)**, relative to violation of the Health and Safety Code; Delete **Article XVI**, Life Safety Requirements for Existing Buildings, and renumber remaining articles; Amend **Article XVII**, Dangerous Buildings, **Section 17.02**, Dangerous Building Defined, **Subsection (T)**, relative to partially constructed buildings; Delete **Article XVIII**, Accessibility.
98-146	11/10/98	Amend **Article XIII**, Outdoor Festivals, **Section 13.03**, Application for Permit, **Subsection (B)**, relative to failure to timely file; Amend **Section 13.03**, **Subsection (C)**, relative to additional submissions the building official may require; Amend **Section 13.03**,

ORDINANCE HISTORY

Number	Date of Adoption	Comments
		by the deletion of **Subsection (D),** and the relettering of remaining subsection; Amend **Section 13.04**, Reports, relative to which city departments receive notice of filing of permit application; Amend **Section 13.05**, Conditions for Permit, **Subsection (A)**, relative to restrictions imposed on the permittee; Amend **Section 13.05**, **Subsection (B)**, relative to insurance requirements; Amend **Section 13.05**, **Subsection (C)**, relative to bond requirements; Amend **Section 13.06**, Denial of Permit; Grounds, **Subsection (A)(3)**, relative to updating the reference to statute; Amend **Section 13.06** by the deletion of **Subsection (A)(10)** and the addition of new **Subsections (A)(10), (A)(11)** and **(A)(12)** relative to removing and adding grounds for denial; Amend **Section 13.07**, Revocation of Permit, relative to empowering certain city officials to revoke a permit after notice; Amend **Section 13.09**, Permit Posting, relative to the location and content of the posting; Add **Section 13.11**, Penalty, relative to the provision of a fine of up to **$2,000** for each offense in violation of the ordinance.
99-42	03/23/99	Amend **Article I**, Building Code, **Section 1.04**, Amendments, Additions and Deletions, by the addition of **Subsection (C)(57)**, amending Section 1006.3.3.1 of the Uniform Building Code, 1997 Edition; Repeal of the existing **Article XVI** and adoption of a new **Article XVI**, Dangerous Buildings, establishing procedures to meet the requirements of current enabling state law; Add **Article XVII**, Additional Authority to Secure Building, establishing procedures to meet the requirements of current enabling state law; Add **Article XVIII**, Performance of Work and Recovery of Cost, transferring said provisions out of the "Uniform Housing" Chapter and into this "Construction" Chapter to complete the procedures in conformance with state law.

ORDINANCE HISTORY

Number	Date of Adoption	Comments
00-105	09/12/00	Amend **Article IV**, Registration, Permits and Inspections, by the addition of **Section 4.16**, Permits For Demolition or Relocation, to clarify the process involved in obtaining a permit for the demolition or relocation of buildings or structures that are fifty (50) years old or older, or located in a Landmark Preservation ("LP") Overlay Zoning District.
02-020	02/05/02	Repeal existing **Article I** and adopt a new **Article I**, Building Code, relative to the adoption of the 2000 International Codes including the 2000 International Building Code (I.B.C.), the 2000 International Residential Code (I.R.C.) and the 2000 International Energy Conservation Code (I.E.C.C.); Amend **Article IV**, Registration, Permits and Inspections, **Section 4.01**, Registration, **Subsections (F)(1)** and **(G)(4)**, to revise the Code from U.B.C. to I.B.C. and I.R.C.; Amend **Section 4.13**, Refunds, **Subsection (D)**, to revise the Code from U.B.C. to I.B.C. and add a reference to I.R.C.; Amend **Section 4.14**, Certificate of Occupancy, **Subsection (B)**, to revise the Code from U.B.C. to I.B.C.; Amend **Article VII**, Signs, **Section 7.07**, Structural Requirements, to revise the Code from U.B.C. to I.B.C.; Amend **Section 7.08**, Use of Plastic Materials, relative to requirements for plastic materials; Amend **Article IX**, Fences, **Section 9.02**, Enclosure of Swimming Pools, Spas and Hot Tubs, **Subsections (E)** and **(G)(2)**, to revise the appendix references; Amend **Article XIII**, Outdoor Festivals, **Section 13.04**, Reports, **Subsection (B)**, relative to updating the reference to the Health and Safety Code.
02-024	02/12/02	Amend **Article I**, Building Code, by the addition of **Section 1.11**, Trash Receptacles, relative to regulations regarding the provision of trash receptacles at all job

ORDINANCE HISTORY

Number	Date of Adoption	Comments
		sites; Add **Section 1.12**, Hours of Construction, relative to setting hours of construction.
02-074	07/16/02	Amend **Article IV**, Registration, Permits and Inspections, **Section 4.16**, Permits for Demolition or Relocation, **Subsection (A)(7)**, to modify the process through which the city council may extend the stay, increasing the total time that city council may impose the stay to ninety days, and increasing the maximum time period for a stay on a demolition permit to a cumulative total of one hundred fifty days.
03-087	07/29/03	Amend **Article IV**, Registration, Permits and Inspections, **Section 4.14**, Certificate of Occupancy, by the addition of **Subsection G**, relative to permits, inspections, certificates and approvals for sexually oriented businesses.
04-004	01/13/04	Amend **Article I**, Building Code, **Section 1.02**, relative to the addition of the 2001 Supplement to the International Energy Conservation Code; **Section 1.04(C)**, relative to amendments to the International Building Code; **Section 1.04(D)**, relative to amendments to the International Residential Code; **Section 1.04(E)(5)**, relative to amendments to the International Energy Conservation Code; **Section 1.06(B)**, relative to appeal of the Building Official's determination regarding an easement use agreement; **Section 1.06(C)**, relative to termination and modification of an easement use agreement; Amend **Article IV**, Registration, Permits and Inspections, **Section 4.01(I)**, relative to registration exemptions for owners; **Section 4.05** by the addition of **Subsection (D)**, relative to the issuance of a Field Permit Card**;** **Section 4.13(C)**, by the addition of a new **Subsection (3)**, relative to an energy inspection; **Section 4.14(C)**, relative to Sexually Oriented Businesses; **Section 4.14**,

ORDINANCE HISTORY

Number	Date of Adoption	Comments
		by the addition of **Subsection (H)**, relative to Applications for Certificates Of Occupancy; **Section 4.15**, relative to indemnification; **Section 4.16**, relative to dangerous building demolition and Municipal Court Authority; Amend **Article XVI,** Dangerous Buildings, relative to definitions, demolition hearings, Municipal Court hearing authority, enclosure of swimming pools, surety bonds, and City collection of expenses; Amend **Article XVII**, Additional Authority to Secure Building, relative to designation of Administrator; Amend **Article XVIII**, Performance of Work and Recovery of Cost, relative to collection of City expenses and liens.
04-042	05/11/04	Amend **Article II**, Building Code Board of Appeals, **Section 2.01**, Appointment; **Section 2.02**, Term of Office; and **Section 2.03**, Quorum, relative to the appointment of Board Members.
04-075	08/10/04	Amend **Article I**, Building Code, **Section 1.04**, Amendments, Additions and Deletions, **Subsection (D)(69)**, relative to swimming pools, spas and hot tubs; Amend **Article IV**, Registration, Permits and Inspections, **Section 4.14**, Certificate of Occupancy, relative to disconnection of electrical service.
04-086	09/21/04	Amend **Article IV**, Registration, Permits and Inspections, **Section 4.07**, Expiration of Permit, relative to a fee for extension of an unexpired permit; **Section 4.10**, Plan Review Fees, relative to plan review fees; **Section 4.11**, Expiration of Application and Plan Review, relative to extension of an application; **Section 4.12**, Refunds, relative to refunds of building permit fees.
05-015	02/22/05	Amend **Article I**, Building Code, **Section 1.04**, Amendments, Additions and Deletions, **Subsection**

ORDINANCE HISTORY

Number	Date of Adoption	Comments
		(D), by the addition of a new **Subsection (61)** relevant to lawn irrigation systems, and renumbering the remaining subsections.
05-060	07/26/05	Amend **Article IV**, Registration, Permits and Inspections, **Section 4.05**, Building Permits Issued, **Subsection (A)**, by the addition of an exception relative to a third party provider; Amend **Section 4.13**, Inspections, **Subsection (A)**, by the addition of an exception relative to a third party provider.
05-068	08/23/05	Amend **Article I**, Building Code, **Section 1.02**, Adoption of Code, relative to adoption of the 2003 International Building Code, 2003 International Residential Code, and 2003 International Energy Conservation Code; Amend **Section 1.04**, Amendments, Additions and Deletions, **Subsection (C),** relative to adopting the 2003 International Building Code; **Subsection (D),** relative to adopting the 2003 International Residential Code; and **Subsection (E),** relative to adopting the 2003 International Energy Conservation Code.
06-018	02/14/06	Amend **Article XIII**, Outdoor Festivals, **Section 13.10**, Exception, relative to providing that activities outside a major sports complex are exempt from Outdoor Festival permit requirements.
06-081	08/22/06	Amend **Article I**, Building Code, **Section 1.04**, Amendments, Additions and Deletions, **Subsection (C)(77)**, **Section 2902**, Minimum Plumbing Facilities, and **Subsection 2902.6.1**, Hand washing lavatory, and **Subsection 2902.6.2**, Service sink; Amend **Article XVI**, Dangerous Buildings, **Section 16.02**, Definitions, **Subsection (A)(1)**, and **Section 16.10**, Notice to Vacate, Violations, **Subsection (A)**, relative to

ORDINANCE HISTORY

Number	Date of Adoption	Comments
		updating the reference to the Community Services Department.
07-096	12/18/07	Amend **Article XVI**, Dangerous Buildings, **Section 16.08**, Liens for Penalties and Expenses, **Subsection (A)**, relative to specifying fees; **Section 16.09**, Notice and Collection of Penalty and Expenses, **Subsection (A)**, relative to specifying fees; **Section 16.12**, Swimming Pool Enclosures, **Subsection (D)**, relative to specifying fees; amend **Article XVII**, Additional Authority to Secure Building, **Section 17.06**, Liens and Collection of Expenses, relative to specifying fees; amend **Article XVIII**, Performance of Work and Recovery of Cost, **Section 18.02**, Account of Expense, Filing of Report: Contents, relative to specifying fees.
08-090	09/30/08	Amend **Article I**, Building Code, **Section 1.06**, Construction Prohibited in Private Drainage and/or Public Easements, **Subsection (B)**, related to fees for easement use agreements; amend **Article IV**, Registration, Permits and Inspections, **Section 4.02**, Permits Required, by the addition of regulations related to excavation, grading, and filling; and Section **4.14**, Certificate of Occupancy, **Subsections (C), (D),** and **(F)**, related to certificates of occupancy; amend **Article VII**, Signs, **Section 7.10**, Temporary Signs Near Polling Places, **Subsection (A)**, related to temporary signs near polling places.
09-024	05/05/09	Amend **Article I**, Building Code, **Section 1.03**, Code Defined; Rule of Construction, related to residential construction; **Section 1.04**, Amendments, Additions and Deletions, **Subsection (C)(74)**, related to retaining wall standards; and **Subsection 1.04(D)**, by the addition of **Subsection (43.5)**, related to corrugated stainless steel tubing; **Section 1.06**, Construction Prohibited in Private Drainage and/or Public

ORDINANCE HISTORY

Number	Date of Adoption	Comments
		Easements, related to easement use agreements; amend **Article IV**, Registration, Permits and Inspections, **Sections 4.01(I), 4.02, 4.05, 4.07, 4.08,** and **4.11**, and the addition of **Sections 4.02.5, 4.05.5,** and **4.11.5**, related to homeowner registration, site plans, posting of building permit at the job site, expiration of applications, plans, and permits, revocation of permits, and other miscellaneous minor changes; amend **Article XVI**, Dangerous Buildings, **Section 16.02**, Definitions, by the amendment of the definition of "Administrator" and the addition of the definition of "Hearing Authority"; by the addition of **Section 16.13**, Requiring Repair, Removal, or Demolition of Structure, relative to dangerous structures.
09-032	06/23/09	Amend **Article II**, Building Code Board of Appeals, by the addition of **Section 2.09**, Model Code Adoption or Amendment, related to procedures for adopting or amending a model code.
09-056	09/22/09	Amend **Article I**, Building Code, **Subsection 1.04**, Amendments, Additions and Deletions, by the deletion of **Subsection (C)(78)** and the renumbering of the remaining subsections; by the amendment of renumbered **Subsection (C)(78)**, relative to removing the definition of Swimming Pools; by the amendment of renumbered **Subsection (C)(79)**, relative to public swimming pools; by the amendment of renumbered **Subsection (C)(81)**, relative to entrapment avoidance; by the addition of a **Subsection (C)(83)** relative to Chapter 35, Reference Standards; through the amendment of **Section 1.04**, by the amendment of **Subsection (D)(75)**, relative to swimming pools, spas and hot tubs.
10-009	01/12/10	Amend **Article I**, Building Code, by the amendment of **Section 1.08**, Enforcement, Violations and Penalties,

ORDINANCE HISTORY

Number	Date of Adoption	Comments
		relative to changing the title of the section and updating penalty provisions; and the amendment of **Section 1.13**, Electronic Submittal of Final Plans; amend **Article IV**, Registration, Permits and Inspections, **Section 4.02.5**, Application for Commercial Site Plan, and **Section 4.04**, Plans and Specifications; amend **Article VI**, Prefabricated or Modular Buildings, **Section 6.01**, General, amend **Article VII**, Signs, **Section 7.07**, Structural Requirements; and **Article X**, Emergency Locator Directory, **Section 10.04**, Information Required, relative to a requirement that final plans or other documents that will be archived must be submitted in electronic format; amend **Article XIII**, Outdoor Festivals, by the deletion of **Section 13.11**, Penalty; amend **Article XVI**, Dangerous Buildings, **Section 16.11**, Other Enforcement, **Subsection (E)**; and by the addition of **Article XIX**, Penalty, relative to updated penalty provisions.
11-001	01/14/11	Amend **Article XIII**, Outdoor Festivals, through the amendment of the title and the Article in its entirety.
11-019	03/22/11	Amend **Article I**, Building Code, **Section 1.04**, Amendments, Additions and Deletions, **Subsection (D)(3)**, relative to adding the definition of "Reclaimed Water."
11-043	08/16/11	Amend **Article XIX** through the addition of a new **Article XIX**, Construction on Lake Arlington, and renumbering the remaining article to **Article XX**, Penalty.
12-011	04/03/12	Amend **Article XIX**, Construction on Lake Arlington, by the addition of **Section 19.02.01**, Work Within Lake Arlington or the Flowage Easement, and **Section 19.02.02**, Appeals to Requirements of Section

ORDINANCE HISTORY

Number	Date of Adoption	Comments
		19.02.01, relative to conforming to the Lake Arlington Master Plan; and by the amendment of **Section 19.05**, Design and Construction Requirements for Piers and Boathouses, **Subsections (B)(4)** and **(L)(4)**, relative to the 100 year flood elevation.
12-020	04/24/12	Amend **Article I**, Building Code, **Section 1.02**, Adoption of Code; **Section 1.04**, Amendments, Additions and Deletions, **Subsections (B), (C), (D),** and **(E)**; and **Section 1.05**, Adoption of Appendices; amend **Article IV**, Registration, Permits and Inspections, **Section 4.01**, Registration, **Subsection (F)**, by the addition of **Subsections (5) – (7)**; **Subsection 4.01(H)**; **Section 4.02**, Commercial Site Plan and Permits Required; **Section 4.03**, Application for Permit, **Subsection (E); Section 4.04**, Plans and Specifications, **Subsection (B); Section 4.05**, Building Permits Issued; **Section 4.12**, Refunds, by the amendment of the first paragraph and **Subsection (D)**; **Section 4.13**, Inspections, **Subsections (A), (C),** and **(D); Section 4.14**, Certificate of Occupancy; **Subsections (A), (B), (C),** and **(F)**; amend **Article VI**, Prefabricated or Modular Buildings; relative to adoption of the International Building Code, 2009 Edition; the International Residential Code, 2009 Edition; and the International Energy Conservation Code, 2009 Edition; amend **Article XVI**, Dangerous Buildings, **Section 16.11**, Other Enforcement, **Subsection (A)**; delete **Section 16.11, Subsection (E)**; amend **Section 16.13**, Requiring Repair, Removal, or Demolition of Structure, **Subsections (B)(7)(f)** and **(C)**; relative to dangerous building violations and procedures.
13-036	08/20/13	Amend **Article I**, Building Code, **Section 1.04**, Amendments, Additions and Deletions, **Subsection (C)**, by the addition of **Subsection (85.1)**; and

ORDINANCE HISTORY

Number	Date of Adoption	Comments
		Subsection (D), by the addition of **Subsection (19.1)**, relative to grading values of Southern Pine lumber.
13-037	08/20/13	Amend **Article I**, Building Code, **Section 1.04**, Amendments, Additions and Deletions, **Subsection (D)**, by the addition of **Subsection (7.1)**, relative to revisions to Table R302.1 regarding the minimum fire separation distance for exterior walls to be constructed without a fire-resistance rating requirement.
13-055	12/03/13	Amend **Article I**, Building Code, **Section 1.04**, Amendments, Additions and Deletions, **Subsection (D)**, by the addition of **Subsections (57.1), (57.2), (60.1), (60.2), (60.3), (60.4), (60.5), (60.6), (64.1), (64.2), (64.3), (64.4), (64.5), (64.6)** and **(64.7)**, relative to the Safe Drinking Water Act; amend **Article IV**, Registration, Permits and Inspections, **Section 4.02**, Commercial Site Plan and Permits Required, **Subsection (B)**, by the deletion of **Subsection (6)** and the renumbering of the remaining subsections; **Section 4.02**, **Subsection (C)(1)**, by the addition of **Subsection (b)**, relative to private property paving.
15-052	10/27/15	Amend **Article XVI**, Dangerous Buildings, **Section 16.04**, Commencement of Hearing, **Subsection (B)**, relative to scheduling a hearing for a historic property; **Section 16.06**, Contents of Order, by the deletion of **Subsection (D)** and the relettering of the remaining subsections; and **Section 16.08**, Liens for Penalties and Expenses, **Subsection (B)**, relative to lien priority.
17-005	02/14/17	Amend **Article IV**, Registrations, Permits and Inspections, relative to the addition of **Section 4.145**, Mobile Food Establishment Certificate of Occupancy, providing for the permitting of an accessory use tied to certain limited existing certificates of occupancy; amend **Article XIII**, Temporary Outdoor Events;

ORDINANCE HISTORY

Number	Date of Adoption	Comments
		relative to the revision of **Section 13.04**, Permit Required, revising the enforcement language in said section; and the addition of **Section 13.12**, Mobile Food Establishments, providing for the permitting of a mobile food establishment on private property at a temporary outdoor event.
18-017	04/10/18	Amend **Article I**, Building Code, **Sections 1.01** through **1.05**, relative to adopting the 2015 Editions of the International Building Code, International Existing Building Code, International Residential Code, and the International Energy Conservation Code; adopting local amendments and associated appendices; through the repeal of **Section 1.08(C)**, relative to enforcement of violations of this Chapter; amend **Article IV**, Registration, Permits and Inspections, **Section 4.02**, Commercial Site Plan and Permits Required, **Subsection (A)** and the addition of **Subsection (H)**, relative to building permit requirements; amend **Section 4.14**, Certificate of Occupancy, **Subsection (B)**, relative to certificate of occupancy requirements.

TABLE OF CONTENTS

ARTICLE I BUILDING CODE

Section 1.01 Title
Section 1.02 Adoption of Code
Section 1.03 Code Defined; Rule of Construction
Section 1.04 Amendments, Additions and Deletions
Section 1.05 Adoption of Appendices
Section 1.06 Construction Prohibited in Easements
Section 1.07 Requirements for Drainage
Section 1.08 Enforcement, Violations
Section 1.09 Skateboard Ramps
Section 1.10 Presumption
Section 1.11 Trash Receptacles
Section 1.12 Hours of Construction
Section 1.13 Electronic Submittal of Final Plans

ARTICLE II BUILDING CODE BOARD OF APPEALS

Section 2.01 Appointment
Section 2.02 Term of Office
Section 2.03 Quorum
Section 2.04 Records
Section 2.05 Procedure
Section 2.06 Appeals; Time Limit
Section 2.07 Board Decisions; Variations and Modifications
Section 2.08 Board Decisions; Procedure
Section 2.09 Model Code Adoption or Amendment

ARTICLE III MOVED BUILDINGS

Section 3.01 Registration and Permits
Section 3.02 Application for Registration and Permits
Section 3.03 Building Official Shall Reject
Section 3.04 Prolonged Damage
Section 3.05 Public Safety Requirements
Section 3.06 Other Permits

Section 3.07 Utility Relocations
Section 3.08 Other Relocations
Section 3.09 Inspections
Section 3.10 Other

ARTICLE IV REGISTRATION, PERMITS AND INSPECTIONS

Section 4.01 Registration
Section 4.02 Commercial Site Plan and Permits Required
Section 4.02.5 Application for Commercial Site Plan
Section 4.03 Application for Permit
Section 4.04 Plans and Specifications
Section 4.05 Building Permits Issued
Section 4.05.5 Expiration of Commercial Site Plan
Section 4.06 Validity of Permit
Section 4.07 Expiration of Permit
Section 4.08 Suspension or Revocation of Permit
Section 4.09 Building Permit Fees
Section 4.10 Plan Review Fees
Section 4.11 Expiration of Building Permit Application and Plan Review
Section 4.11.5 Expiration of Commercial Site Plan Application
Section 4.12 Refunds
Section 4.13 Inspections
Section 4.14 Certificate of Occupancy
Section 4.14.5 Mobile Food Establishment Certificate of Occupancy
Section 4.15 Indemnification
Section 4.16 Permits for Demolition or Relocation

ARTICLE V REQUIRED FEES

Section 5.01 Standards

ARTICLE VI MANUFACTURED HOUSING AND INDUSTRIALIZED HOUSING AND BUILDINGS

Section 6.01 Definitions
Section 6.02 Permits for Industrialized Housing and Buildings

Section 6.03 Permits for Manufactured Housing, HUD Code Manufactured Homes and Mobile Homes
Section 6.04 Electronic documents required

ARTICLE VII SIGNS

Section 7.01 Permits Required
Section 7.02 Identification of Signs
Section 7.03 Unsafe Signs
Section 7.04 Maintenance
Section 7.05 Unlawful Signs
Section 7.06 Location Restrictions
Section 7.07 Structural Requirements
Section 7.08 Use of Plastic Materials
Section 7.09 Presumption - Violations In or On Public Property
Section 7.10 Temporary Signs Near Polling Places

ARTICLE VIII SIDEWALKS, CURBS AND DRIVEWAYS

Section 8.01 Registration
Section 8.02 Permits
Section 8.03 Performance

ARTICLE IX FENCES

Section 9.01 Barbed Wire Fence
Section 9.02 Enclosure of Swimming Pools, Spas and Hot Tubs

ARTICLE X EMERGENCY LOCATOR DIRECTORY

Section 10.01 Purpose
Section 10.02 Filing of Information Required
Section 10.03 Time of Filing
Section 10.04 Information Required

ARTICLE XI TEMPORARY OCCUPANCY OF STREETS

Section 11.01 General

ARTICLE XII SANITARY FACILITIES

Section 12.01 Sanitary Sewer Connection During Construction
Section 12.02 Alternative Sanitary Facilities During Construction

ARTICLE XIII TEMPORARY OUTDOOR EVENTS

Section 13.01 Purpose
Section 13.02 Definitions
Section 13.03 General Authority and Duty of the Administrator
Section 13.04 Permit Required
Section 13.05 Application for Permit
Section 13.06 Application Review Procedure
Section 13.07 Conditions for Permit
Section 13.08 Denial of Permit; Grounds; Revocation
Section 13.09 Permit Denial or Revocation Hearing
Section 13.10 Permit Posting
Section 13.11 Exception
Section 13.12 Mobile Food Establishment (“Food Truck”)

ARTICLE XIV OVERSIZE AND OVERWEIGHT VEHICLE PERMITS

Section 14.01 Application and Permit Requirements

ARTICLE XV NOISE LEVEL REDUCTIONS

Section 15.01 Aircraft Noise Zones
Section 15.02 Certification of Plans

ARTICLE XVI DANGEROUS BUILDINGS

Section 16.01 Authority

Section 16.02 Definitions
Section 16.03 Dangerous Building Defined
Section 16.04 Commencement of Hearing
Section 16.05 Conduct of Hearing
Section 16.06 Contents of Order
Section 16.07 Failure to Comply With Order
Section 16.08 Liens for Penalties and Expenses
Section 16.09 Notice and Collection of Penalty and Expenses
Section 16.10 Notice to Vacate; Violations
Section 16.11 Other Enforcement
Section 16.12 Swimming Pool Enclosures
Section 16.13 Requiring Repair, Removal, or Demolition of Structure

ARTICLE XVII ADDITIONAL AUTHORITY TO SECURE BUILDING

Section 17.01 Authority to Secure Building
Section 17.02 Issuance of Notice
Section 17.03 Contents of Notice
Section 17.04 Service of Notice
Section 17.05 Hearing
Section 17.06 Liens and Collection of Expenses

ARTICLE XVIII PERFORMANCE OF WORK AND RECOVERY OF COST

Section 18.01 General Procedure
Section 18.02 Account of Expense, Filing of Report: Contents
Section 18.03 Report Transmitted to Council - Set for Hearing
Section 18.04 Protests and Objections - How Made
Section 18.05 Hearing of Protests
Section 18.06 Assessment
Section 18.07 Contest
Section 18.08 Authority for Installation Payment of Assessments with Interest
Section 18.09 Lien of Assessment

ARTICLE XIX CONSTRUCTION ON LAKE ARLINGTON

Section 19.01 Definitions

Section 19.02 Permits Required
Section 19.02.01 Work Within Lake Arlington or the Flowage Easement
Section 19.02.02 Appeals to Requirements of Section 19.02.01
Section 19.03 Earthwork
Section 19.04 Design and Construction Requirements for Retaining Walls
Section 19.05 Design and Construction Requirements for Piers and Boathouses

ARTICLE XX PENALTY

Section 20.01 Penalty

ARTICLE I

BUILDING CODE

Section 1.01 Title

This Chapter shall be known as the "Construction" Chapter of the Arlington City Code. Article I shall be known as the "Building Code" of the City of Arlington and shall incorporate the herein referenced and adopted Editions of the International Code, as published by the International Code Council, Inc.

Section 1.02 Adoption of Code

The International Building Code, 2015 Edition (hereinafter called "I.B.C."); the International Existing Building Code, 2015 Edition (hereinafter called "I.E.B.C."); the International Residential Code, 2015 Edition (hereinafter called "I.R.C."); and the International Energy Conservation Code, 2015 Edition (hereinafter called "I.E.C.C."); as published by the International Code Council, Inc. are hereby adopted and designated, together with the deletions, amendments and addenda hereinafter contained, as the Building Code of the City of Arlington, the same as though said I.B.C., I.E.B.C., I.R.C. and I.E.C.C. were copied at length herein. Copies of the I.B.C., I.E.B.C., I.R.C. and I.E.C.C. and their Appendices shall be kept on file in the Office of the City Secretary.

The adoption of the 2015 I.R.C. as stated herein except that Section R313 of the 2003 I.R.C., as amended and originally adopted on August 23, 2005 by Ordinance No. 05-068, to read as follows is maintained:

R313.1 Fire sprinkler system. All R3 and U occupancies are required to have an approved fire sprinkler system.

Exception: Buildings with an approved fire department access.

Section 1.03 Code Defined; Rule of Construction

This Building Code shall include all of the provisions of the I.B.C., I.E.B.C., I.R.C. and I.E.C.C. as adopted by Section 1.02 above and all other provisions contained herein. In the event a conflict is determined to exist between said I.B.C., I.E.B.C., I.R.C. and I.E.C.C. as adopted and the other provisions of this Chapter, the provisions of this Chapter control. Items regulated by permit located on residential lots that are not specifically referenced in the I.R.C. are regulated by the I.B.C or I.E.B.C.

Section 1.04 <u>Amendments, Additions and Deletions</u>

The adoption of the I.B.C, I.E.B.C., I.R.C. and I.E.C.C., as provided in Section 1.02 above, is modified and amended by the following:

A. The addition thereto of Articles II, et seq., of this Chapter.

B. The deletion in the entirety of the following provisions of the I.B.C., I.E.B.C., I.E.C.C., and I.R.C.:

1. Sections 105 I.B.C., 105 I.E.B.C and 105 I.R.C., entitled **Permits**;
2. Section 107 I.B.C. entitled **Submittal Documents**, Section 106 I.E.B.C. entitled **Construction Documents** and Section 106 I.R.C. entitled **Construction Documents**.
3. Sections 109 I.B.C., 108 I.E.B.C., 108 I.R.C. and 107 I.E.C.C, entitled **Fees**;
4. Sections 110 I.B.C., 109 I.E.B.C. and 109 I.R.C., entitled **Inspections**;
5. Sections 111 I.B.C., 110 I.E.B.C. and 110 I.R.C., entitled **Certificate of Occupancy**;
6. Sections 113 I.B.C., 112 I.E.B.C., 112 I.R.C. and 109 I.E.C.C, entitled **Board of Appeals**;
7. Sections 114 I.B.C., 113 I.E.B.C. and 113 I.R.C., entitled **Violations**;
8. Sections 116 I.B.C. and 115 I.E.B.C. entitled **Unsafe Structures and Equipment**;
9. Section 2503 I.B.C., entitled **Inspection**;
10. and all of Chapters 34 through 43 of the I.R.C.

C. The amendment of the following I.B.C. provisions:

1. The amendment of Section 101.1, entitled **Title**, to read as follows:

   101.1 Title. These regulations shall be known as the Building Codes of the City of Arlington, Texas, hereinafter referred to as "this code."

2. The amendment of the Exceptions to Section 101.2, entitled **Scope**, to read as follows:

   Exceptions:

   1. Detached one- and two-family dwellings and multiple single-family dwellings (townhouses) not more than three stories above grade plane in height with a separate means of egress and their

accessory structures shall comply with the International Residential Code.

2. Portable and/or temporary storage buildings not exceeding three hundred twenty (320) square feet in area shall not be subject to the provisions of this Building Code for foundations and framing provided:

   (a) The building shall not be intended or used for human occupancy;

   (b) No plumbing and/or mechanical improvements shall be permitted and any electrical improvements are supervised by permits and work shall be installed in full compliance with the appropriate Chapter of the Code of the City of Arlington for such work; and

   (c) A permit for such building shall have been obtained from the Building Official.

3. The amendment of Section 101.4, entitled **Referenced codes**, to read as follows:

   101.4 Referenced codes. The other codes listed in Sections 101.4.1 through 101.4.8 and referenced elsewhere in this code, when specifically adopted, shall be considered part of the requirements of this code to the prescribed extent of each such reference. Whenever amendments have been adopted to the referenced codes and standards, each reference to said code and standard shall be considered to reference the amendments as well. Any reference to NFPA 70 or the Electrical Code shall mean the Electrical Code as adopted.

4. The amendment of Section 101.4, entitled **Referenced codes**, to add a new section 101.4.8, entitled **Electrical**, to read as follows:

   101.4.8 Electrical. The provisions of the Electrical Code shall apply to the installation of electrical systems, including alterations, repairs, replacement, equipment, appliances, fixtures, fittings and appurtenances thereto.

5. The amendment of Section 103 and 103.1 to read as follows:

SECTION 103
DIVISION OF BUILDING INSPECTIONS

103.1 Creation of enforcement agency. The Division of Building Inspections is hereby created and the official in charge thereof shall be known as the Building Official.

6. The amendment of Section 104.6, entitled **Right of Entry**, to read as follows:

104.6 Right of Entry. Where it is necessary to make an inspection to enforce any of the provisions of this Building Code, or whenever the Building Official or an authorized representative has reasonable cause to believe that there exists in any building or upon any premises any condition or violation which makes such building or premises unsafe, dangerous or hazardous, the Building Official or an authorized representative may enter such building or premises at all reasonable times to inspect the same or to perform any duty imposed upon said Building Official by this Building Code. If such building or premises is occupied, the Building Official or an authorized representative shall first present credentials and request entry. If such building or premises is unoccupied, the Building Official shall first make a reasonable effort to locate the owner or other person having charge or control of the building or premises and request entry. If such entry is refused, or, if no owner or other person having charge or control of the building or premises can be located, the Building Official or an authorized representative shall have recourse to every remedy provided by law to secure entry.

7. The deletion of Section 104.10.1, entitled **Flood Hazard Areas**, in its entirety.

8. The addition of Section 104.12, entitled **Occupancy Violations**, to read as follows:

104.12 Occupancy Violations. Whenever any building, structure, or equipment therein which is regulated by this Building Code is being used contrary to the provisions of said Code, the Building Official or an authorized representative may order that such use be discontinued and/or that the building or structure, or a portion thereof, be vacated by written notice served on any person who is causing such use to be continued. Further, the Building Official or an authorized representative may order

the evacuation of any building or premises, or a portion thereof, which constitutes a dangerous building as defined in Article XVI of this Chapter.

Notice to stop use shall be given by personal delivery or by certified mail, return receipt requested, to the person responsible for the continued use. Such person shall discontinue the use within the time prescribed by the Building Official after receipt of such notice and shall not resume the use of the building or premises until first rendering the same in compliance with this Building Code.

Notice to vacate a dangerous building or premises shall be posted at or upon each exit of the said structure affected thereby, and shall be in substantially the following form:

"DO NOT ENTER
UNSAFE TO OCCUPY

It is a misdemeanor to occupy this building,
or to remove or deface this notice.

Arlington Building Official
(by)_____
(date)_____
(compliance due date) _____"

No person shall remain in or enter any building or premises which has been so posted, except that entry may be made to repair, demolish or remove the unsafe condition. Such entry or the destruction, defacing or removal of said notice prior to approval by the Building Official or an authorized representative shall be a violation of this Building Code.

9. The amendment of Section 115, entitled **STOP WORK ORDER**, to read as follows:

SECTION 115
STOP WORK ORDER

115.1 Stop Work Order. Whenever any work is being done contrary to the provisions of this Code, the Building Official may order the work stopped by notice in writing served on any persons engaged in the doing or

causing such work to be done. Any such person shall forthwith stop such work until:

a. He or she is authorized by the Building Official to proceed with the work; or

b. An appeal perfected pursuant to Section 2.06 of Article II has resulted in a waiver of the condition causing the stop order, or a finding that there is no cause for a stop order. Failure to stop such work, in addition to penalties and remedies elsewhere set forth, shall void any appeal.

10. The amendment of Section 202, entitled **DEFINITIONS**, by amending the following definitions found therein to read as follows:

AMBULATORY CARE FACILITY. Buildings or portions thereof used to provide medical, surgical, psychiatric, nursing or similar care on a less than 24-hour basis to individuals who are rendered incapable of self-preservation. This group may include, but not necessarily be limited to, the following:
- Dialysis centers
- Sedation dentistry
- Surgery centers
- Colonic centers
- Psychiatric centers

ASSISTED LIVING FACILITIES. A building or part thereof housing persons, on a 24-hour basis, who because of age, mental disability or other reasons, live in a supervised residential environment which provides personal care services. The occupants are capable of responding to an emergency situation without physical assistance from staff.

ATRIUM. An opening connecting three or more stories other than enclosed stairways, elevators, hoistways, escalators, plumbing, electrical, air-conditioning or other equipment, which is closed at the top and not defined as a mall. Stories, as used in this definition, do not include balconies within assembly groups or mezzanines that comply with Section 505.

BASE FLOOD ELEVATION. The elevation of the *base flood*, including wave height, relative to the National Geodetic Vertical Datum

(NGVD), North American Vertical Datum (NAVD) or other datum specified on the Flood Insurance Rate Map (FIRM) and found in the accompanying Flood Insurance Study (FIS) for Zones A, AE, AH, A1-A30, or AR that indicates the water surface elevation resulting from the flood that has a 1% chance of equaling or exceeding that level in any given year.

DESIGN FLOOD. The *flood* associated with the greater of the following two areas:

1. Area that is subject to a 1-percent or greater chance of flooding in any year based upon fully urbanized land conditions.
2. Area designated as a *special flood hazard area* on a community's flood hazard map or otherwise adopted by resolution as a regulatory floodplain.

EXISTING CONSTRUCTION. Any buildings and structures for which the "start of construction" commenced before the effective date of the initial FIRM (December 31, 1974). "Existing construction" may also be referred to as "existing structures."

FLOOD HAZARD AREA. The greater of the following two areas:

1. Area that is subject to a 1-percent or greater chance of flooding in any year based upon fully urbanized land conditions.
2. Area designated as a *special flood hazard area* on a community's flood hazard map or otherwise adopted by resolution as a regulatory floodplain.

SPECIAL INSPECTOR. A qualified person employed or retained by an approved agency who shall prove to the satisfaction of the registered design professional in responsible charge and approved by the Building Official as having the competence necessary to inspect a particular type of construction requiring special inspection.

SUBSTANTIAL DAMAGE. Damage of any origin sustained by a structure whereby the cost of restoring the structure to its before-damaged condition would equal or exceed 25 percent of the market value of the structure one day before the damage occurred. Please refer to the definition of "SUBSTANTIAL IMPROVEMENT".

SUBSTANTIAL IMPROVEMENT. Any repair, reconstruction, rehabilitation, addition or improvement of a building or structure, the cost

of which equals or exceeds 25 percent of the market value of the structure before the "start of construction" of the improvement. If the structure has sustained substantial damage, any repairs are considered substantial improvement regardless of the actual repair work performed. The term does not, however, include either:

1. Any project for improvement of a building required to correct existing health, sanitary or safety code violations identified by the building official and that are the minimum necessary to assure safe living conditions.
2. Any alteration of a historic structure provided that the alteration will not preclude the structure's continued designation as a historic structure.

11. The amendment of Section 202, entitled **DEFINITIONS**, by adding the following definitions to read as follows:

MULTI-UNIT RENTAL COMPLEX is two or more dwelling units in one or more buildings that are under common ownership, managed by the same owner, managing agent, or management company, and located on the same lot or tract of land or adjacent lots or tracts of land. The term includes a condominium project. The term does not include:

(A) A facility primarily renting rooms to overnight guests; or

(B) A single-family home or adjacent single-family homes that are not part of a condominium project.

POOL DECK is a flat walking surface consisting of wood, stone, brick, concrete or other similar material located within five feet (5′) of the water's edge of a swimming pool or spa.

PROPERTY OWNERS ASSOCIATION is an association of property owners for a residential subdivision, condominium, cooperative, townhouse project, or other project involving residential dwellings.

REPAIR GARAGE. A building, structure, or portion thereof used for servicing or repairing motor vehicles. This occupancy shall also include garages involved in minor repair, modification and servicing of motor vehicles for items such as lube changes, inspections, windshield repair or replacement, shocks, minor part replacement and other such minor repairs.

SELF-CLOSING GATE is a gate, which closes or shuts automatically, without the aid of human, electrical, solar or battery power after being opened.

SELF-CLOSING AND SELF-LATCHING DEVICE is a device that causes a gate to automatically close and latch without human, electrical, solar or battery power.

SHALL, as it applies to an act or duty to be performed by the Building Official pursuant to any section of this Building Code, is discretionary. Its use in all other applications in this Code shall be mandatory.

12. The amendment of Section 202, entitled **DEFINITIONS**, by deleting the following definition:

FLOOD HAZARD AREA SUBJECT TO HIGH VELOCITY WAVE ACTION

13. The amendment of Section 303.1.3, entitled **Associated with Group E occupancies**, to read as follows:

303.1.3 Associated with Group E occupancies. A room or space used for assembly purposes that is associated with a Group E occupancy is not considered a separate occupancy. Except when applying the assembly requirements of Chapter 10 and 11.

14. The amendment of Section 304.1, entitled **Business Group B**, to read as follows:

304.1 Business Group B. Business Group B occupancy includes, among others, the use of a building or structure, or a portion thereof, for office, professional or service-type transactions, including storage of records and accounts. Business occupancies shall include, but not be limited to, the following:

Airport traffic control towers
Ambulatory health care facilities
Animal hospitals, kennels and pounds
Banks
Barber and beauty shops

Car wash
Civic administration
Clinic, outpatient
Dry cleaning and laundries; pick-up and delivery stations and self-service
Educational occupancies above the 12th grade
Electronic data processing
Fire Stations
Laboratories; testing and research
Motor vehicle showrooms
Police stations with detention facilities for 5 or less
Post offices
Print shops
Professional services (architects, attorneys, dentists, physicians, engineers, etc.)
Radio and television stations
Restaurants with no dine-in facilities (take-out or delivery only)
Telephone exchanges

15. The amendment of Exception 4 to Section 307.1, entitled **High-hazard Group H**, to read as follows:

    4. Cleaning establishments that utilize combustible liquid solvents having a flash point of 140°F (60°C) or higher in closed systems employing equipment listed by an approved testing agency, provided that this occupancy is separated from all other areas of the building by 1-hour fire barriers constructed in accordance with Section 707, or 1-hour horizontal assemblies constructed in accordance with Section 711, or both. See also Chapter 21, Dry Cleaning Plant provision of the Fire Code.

16. The amendment of Section 310.5, entitled **Residential Group R**, more specifically the paragraphs entitled **R-3** to read as follows:

    R-3 Residential occupancies where the occupants are primarily permanent in nature and not classified as R-1, R-2, R-4 or I, including:

    Buildings that do not contain more than two dwelling units.
    Adult care facilities that provide accommodations for five or fewer persons of any age for less than 24 hours.

Child care facilities that provide accommodations for five or fewer persons of any age for less than 24 hours.
Congregate living facilities with 16 or fewer persons.
Adult care and child care facilities with five or fewer unrelated persons that are within a single-family home are permitted to comply with the International Residential Code.

17. The amendment of Section 311.2, entitled **Moderate-hazard storage, Group S-1**, to add the use classification "Self Service Storage Facility."

18. The amendment of Section 403.1, entitled **Applicability**, to amend Exception 3 to read as follows:

    3. The *open air* portion of a building containing a Group A-5 occupancy in accordance with Section 303.6.

19. The amendment of Section 403.3, entitled **Automatic sprinkler system**, by the deletion of Exception 2.

20. The amendment of Section 403.3.2, entitled **Water supply to required fire pumps**, to read as follows:

    403.3.2 Water supply to required fire pumps. In buildings that are more than 120 feet (36.5 m) in building height, required fire pumps shall be supplied by connections to no fewer than two water mains located in different streets. Separate supply piping shall be provided between each connection to the water main and the pumps. Each connection and the supply piping between the connection and the pumps shall be sized to supply the flow and pressure required for the pumps to operate.

    Exception: Two connections to the same main shall be permitted provided that the main is valved such that an interruption can be isolated so that the water supply will continue without interruption through no fewer than one of the connections.

21. The amendment of Section 404.5, entitled **Smoke control**, by the deletion of the Exception.

22. The amendment of Section 406.3.5.1, entitled **Carport separation**, to add a sentence to read as follows:

406.3.5.1 Carport Separation. A separation is not required between a Group R-3 and U carport, provided the carport is entirety open on two or more sides and there are not enclosed areas above. A fire separation is not required between a Group R-2 and U carport provided that the carport is entirely open on all sides and that the distance between the two is at least 10 feet (3048 mm).

23. The amendment of the Exception to Section 411.4, entitled **Automatic sprinkler system**, to read as follows:

    Exception: An automatic sprinkler system need not be provided for amusement buildings actually operating not more than thirty (30) consecutive days.

24. The amendment of Section 411.7.1, entitled **Photo luminescent exit signs**, to read as follows:

    411.7.1 Photo luminescent exit signs. Photo luminescent exit signs are prohibited.

25. The amendment of Section 416.5 entitled **Fire protection,** to read as follows:

    416.5 Fire protection. An automatic fire-extinguishing system shall be provided in all spray, dip and immersing spaces and storage rooms and shall be installed in accordance with Chapter 9 for both existing and new spray, dip and immersing spaces and storage rooms.

26. The amendment of Section 423.3, entitled **Critical Emergency Operations**, by deleting it in its entirety.

27. The amendment of Section 423.4, entitled **Group E occupancies**, to add Section 423.4.1 to read as follows:

    423.4.1 Group E occupancies. In areas where the shelter design wind speed for tornados is 250 MPH in accordance with Figure 304.2(1) of ICC 500, all new buildings for Group E occupancies with an aggregate occupant load of 50 or more shall have a storm shelter constructed in accordance with ICC 500. The shelter shall be capable of housing the total occupant load of the Group occupancy.

28. The amendment of Section 506.3.2, entitled **Minimum frontage distance**, to add Section 506.3.2.1 to read as follows:

506.3.2.1 Open space limits. Such open space shall be either on the same lot or dedicated for public use and shall be accessed from a street or approved fire lane. In order to be considered as accessible, if not in direct contact with a street or an approved fire lane, a minimum ten (10) foot wide pathway adjoining fire department access from the street or approved fire lane shall be provided.

29. The amendment of Table 602, entitled **FIRE-RESISTANCE RATING REQUIREMENTS FOR EXTERIOR WALLS BASED ON FIRE SEPARATION DISTANCE[ae]**, to insert footnote h. to the heading "OCCUPANCY GROUP A, B, E, F-2, I, R[h], S-2[g], U[bh]" to read as follows:

h. For one- and two-family dwellings and apartment buildings, open metal carport structures may be constructed within zero (0) feet of the property line without fire-resistive or opening protection when the location of such is approved as required by other City ordinances.

30. The amendment of Section 712.1.9, entitled **Two-story opening**, to change Item 4 to read as follows:

4. Is not open to a corridor in Group I and H occupancies.

31. The amendment of Section 901.6.1, entitled **Automatic sprinkler systems**, to add Section 901.6.1.1 to read as follows:

901.6.1.1 Standpipe Testing. Building owners/managers must maintain and test standpipe systems as per NFPA 25 requirements. The following additional requirements shall be applied to the testing that is required every 5 years:

1. The piping between the Fire Department Connection (FDC) and the standpipe shall be backflushed when foreign material is present, and also hydrostatically tested for all FDC's on any type of standpipe system. Hydrostatic testing shall also be conducted in accordance with NFPA 25 requirements for the different types of standpipe systems.

2. For any manual (dry or wet) standpipe system not having an automatic water supply capable of flowing water through the standpipe, the tester shall connect hose from a fire hydrant or portable pumping system (as approved by the fire code official) to each FDC, and flow water through the standpipe system to the roof outlet to verify that each inlet connection functions properly. Confirm that there are no open hose valves prior to introducing water into a dry standpipe. There is no required pressure criteria at the outlet. Verify that check valves function properly and that there are no closed control valves on the system.

3. Any pressure relief, reducing, or control valves shall be tested in accordance with the requirements of NFPA 25. All hose valves shall be exercised.

4. If the FDC is not already provided with approved caps, the contractor shall install such caps for all FDC's as required by the fire code official.

5. Upon successful completion of standpipe test, place a blue tag (as per Texas Administrative Code, Fire Sprinkler Rules for Inspection, Test and Maintenance Service (ITM) Tag) at the bottom of each standpipe riser in the building. The tag shall be check-marked as "Fifth Year" for Type of ITM, and the note on the back of the tag shall read "5 Year Standpipe Test" at a minimum.

6. The procedures required by Texas Administrative Code Fire Sprinkler Rules with regard to Yellow Tags and Red Tags or any deficiencies noted during the testing, including the required notification of the local Authority Having Jurisdiction (fire code official) shall be followed.

7. Additionally, records of the testing shall be maintained by the owner and contractor, if applicable, as required by the State Rules mentioned above and NFPA 25.

8. Standpipe system tests where water will be flowed external to the building shall not be conducted during freezing conditions or during the day prior to expected night time freezing conditions.

9. Contact the fire code official for requests to remove existing fire hose from Class II and III standpipe systems where employees are not trained in the utilization of this firefighting equipment. All standpipe hose valves must remain in place and be provided with an approved cap and chain when approval is given to remove hose by the fire code official.

32. The amendment of Section 902.1, entitled **Definitions**, by the amendment of the definition of **STANDPIPE, TYPES OF,** under **Manual dry** as referenced in Section 202, to read as follows:

Manual dry. A dry standpipe system that does not have a permanent water supply attached to the system. Manual dry standpipe systems require water from a fire department pumper to be pumped into the system through the fire department connection in order to supply the system demand. The system must be supervised as specified in Section 905.9.

33. The amendment of Section 903.1.1, entitled **Alternative protection**, to read as follows:

903.1.1 Alternative protection. Alternative automatic fire-extinguishing systems complying with Section 904 shall be permitted in addition to automatic sprinkler protection where recognized by the applicable standard, or as approved by the fire code official.

34. The amendment of Section 903.2, entitled **Where required**, to add the following and delete the Exception:

903.2 Where required. Approved automatic sprinkler systems in new buildings and structures shall be provided in the locations described in Sections 903.2.1 through 903.2.12. Automatic Sprinklers shall not be installed in elevator machine rooms, elevator machine spaces, and elevator hoistways, other than pits where such sprinklers would not necessitate shunt trip requirements under any circumstances. Storage shall not be allowed within the elevator machine room. Signage shall be provided at the entry doors to the elevator machine room indicating "ELEVATOR MACHINERY – NO STORAGE ALLOWED."

35. The amendment addition of Section 903.2.1, entitled **Group A**, to add a new Section 903.2.1.8 to read as follows:

903.2.1.8 Special amusement building. Special amusement buildings shall be equipped throughout with an automatic sprinkler system.

Exception: An automatic sprinkler system need not be provided when an amusement building shall be in existence less than 30 days and when the construction and use is approved by the Fire Code Official or authorized representative.

36. The amendment of Item 2 under Section 903.2.4, entitled **Group F-1**, to read as follows:

    2. A Group F-1 fire area is located more than two stories above grade plane.

37. The amendment of Section 903.2.9, entitled **Group S-1**, to add a new Section 903.2.9.3, to read as follows:

    903.2.9.3 Self-service storage facility. An automatic sprinkler system shall be installed throughout all self-service storage facilities.

    Exception: One story self-service storage facilities, that have no interior corridors, with a one-hour fire barrier wall installed between every storage compartment.

38. The amendment of Section 903.2.11.3, entitled **Buildings 55 feet or more in height**, to read as follows and Exception 1 is deleted:

    903.2.11.3 Buildings over two stories in height. An automatic sprinkler system shall be installed throughout buildings, other than penthouses in compliance with Section 1509 of the International Building Code, that is located 55 feet or more above the lowest level of fire department vehicle access.

39. The amendment of Section 903.2.11, entitled **Specific building areas and hazards**, to add a new Section 903.2.11.7 to read as follows:

    903.2.11.7 High-Piled Combustible Storage. For any building with a clear height exceeding 12 feet (4572 mm), see Chapter 32 of the Fire Code to determine if those provisions apply.

40. The amendment of Section 903.2.11, entitled **Specific building areas and hazards**, to add a new Section 903.2.11.8 to read as follows:

903.2.11.8 Spray Booths and Rooms. New and existing spray booths and spraying rooms shall be protected by an approved automatic fire-extinguishing system.

41. The amendment of Section 903.3.1.1.1, entitled **Exempt locations**, to read as follows:

903.3.1.1.1 Exempt locations. When approved by the fire code official, automatic sprinklers shall not be required in the following rooms or areas where such rooms or areas are protected with an approved automatic fire detection system in accordance with Section 907.2 that will respond to visible or invisible particles of combustion. Sprinklers shall not be admitted from a room merely because it is damp, of fire-resistance-rated construction or contains electrical equipment.

1. Any room where the application of water, or flame and water, constitutes a serious life or fire hazard.
2. Any room or space where sprinklers are considered undesirable because of the nature of the contents, when approved by the code official.
3. Generator and transformer rooms, under the direct control of a public utility, separated from the remainder of the building by walls and floor/ceiling or roof/ceiling assemblies having a fire-resistance rating of not less than 2 hours.
4. {Deleted}
5. Elevator machine rooms, machinery spaces, and hoistways, other than pits where such sprinklers would not necessitate shunt trip requirements under any circumstances.
6. {Deleted}

42. The amendment of Section 903.3.1.2, entitled **NFPA 13R sprinkler systems**, to read as follows:

903.3.1.2 NFPA 13R sprinkler system. Required automatic sprinkler systems in Group R occupancies of four stories or less may be hydraulically calculated within the dwelling units in accordance with NFPA 13R and as amended by this code. Sprinkler protection shall be

provided throughout, including the means of egress, patios, bathrooms, closets, balconies and attics.

Exceptions:

1. A fire department connection (FDC) is not required for one and two-family dwellings.
2. A required system for one and two-family dwellings may be hydraulically calculated using the standard for a 13D sprinkler system.
3. A required system for one and two-family dwellings may use materials that meet the standard for a 13D sprinkler system.

43. The amendment of Section 903.3.1.2, entitled **NFPA 13R sprinkler systems**, to add a new Section 903.3.1.2.3, entitled **Attics and Attached Garages**, to read as follows:

Section 903.3.1.2.3 Attics and Attached Garages. Sprinkler protection is required in attic spaces of such buildings two or more stories in height, in accordance with NFPA 13 and or NFPA 13R requirements, and in attached garages.

44. The amendment of Section 903.3.1.3, entitled **NFPA 13D sprinkler systems**, to read as follows:

903.3.1.3 NFPA 13D sprinkler systems. Non-required automatic sprinkler systems in one and two-family dwellings and manufactured homes may be installed in accordance with NFPA 13D or in accordance with state law.

45. The amendment of Section 903.3.5, entitled **Water supplies**, to add a second paragraph to read as follows:

Water supply as required for such systems shall be provided in conformance with the supply requirements of the respective standards; however, every fire protection system shall be designed with a 10-psi safety factor. Reference Section 507.4 for additional design requirements.

46. The amendment of Section 903.3.7, entitled **Fire department connections**, to read as follows:

903.3.7 Fire department connections. The location of fire department connections shall be approved by the Fire Code Official. All fire department connections in the City of Arlington shall be 4" Storz connections. The permanent Storz adapter shall be constructed of high strength, light weight, corrosion resistant aluminum alloy capable of being securely attached to standpipe/sprinkler outlets designed for fire department Storz connections. The Storz lug connection shall conform to industry standards. The hose sealing surface shall consist of a machined metal seat to eliminate rubber gaskets, coated to protect against long term exposure to the environment. The Storz connection shall connect to the pipe outlet using National Standard Thread. The connection shall be angled downward at a 30° angle. A semi-permanent ¼" mesh screen shall be provided inside the Storz adapter, constructed of corrosion resistant metal. A 4" Storz aluminum cap with chain or cable shall be provided for the fire department connection. For each additional 1500 G.P.M. required or fraction thereof an additional 4" Storz connection is required.

47. The amendment of Section 903.4, entitled **Sprinkler system supervision and alarms,** to read as follows:

903.4 Sprinkler system supervision and alarms. All valves controlling the water supply for automatic sprinkler systems and water-flow switches on all sprinkler systems shall be electrically supervised and monitored by a UL listed Central Station. The fire-pump system shall also be supervised and monitored for "power available," "phase reversal" and "pump running" conditions on distinct circuits.

Exceptions:

1. Automatic sprinkler systems protecting one-and two-family dwellings.
2. Limited area systems serving fewer than 20 sprinklers.
3. Jockey pump control valves that are sealed or locked in the open position.

Sprinkler and standpipe system water-flow detectors shall be provided for each floor tap to the sprinkler system and shall cause an alarm upon detection of water flow for more than 45 seconds. All control valves in the sprinkler and standpipe systems except for fire department hose connection valves shall be electrically supervised to initiate a supervisory signal at the central station upon tempering.

48. The amendment of Section 903.4.2, entitled **Alarms**, to add a second paragraph to read as follows:

    The alarm device required on the exterior of the building shall be a weatherproof horn/strobe notification appliance with a minimum 75 candela strobe rating, installed as close as practicable to the fire department connection.

49. The amendment of Section 903.4.3, entitled **Floor control valves**, to read as follows:

    903.4.3 Floor control valves. Sprinkler and standpipe system water-flow detectors shall be provided for each floor tap to the sprinkler system and shall cause an alarm upon detection of water flow.

50. The addition of Section 903.6., entitled **Spray booths and rooms**, to read as follows:

    903.6. Spray booths and rooms. New and existing spray booths and spray rooms shall be protected by an approved automatic fire extinguishing system in accordance with Section 1504.4 of the International Fire Code.

51. The addition of Section 905.2, entitled **Installation standards**, to read as follows:

    905.2 Installation standards. Standpipe systems shall be installed in accordance with this section and NFPA 14. Manual dry standpipe systems shall be supervised with a minimum of 10-psig and a maximum of 40-psig air pressure with a high/low alarm.

52. The amendment of Section 905.3.2, entitled **Group A**, to delete Exceptions 1 and 2.

53. The amendment of Section 905.3, entitled **Required installations**, by adding Section 9.05.3.9 and related Exceptions to read as follows:

    905.3.9 Buildings exceeding 10,000 sq. ft. In buildings exceeding 10,000 square feet in area per story and where any portion of the building's interior area is more than 200 feet (60960 mm) of travel, vertically and

horizontally, from the nearest point of fire department vehicle access, Class I automatic wet or manual wet standpipes shall be provided.

Exceptions:

1. Automatic dry and semi-automatic dry standpipes are allowed as provided for in NFPA 14.
2. R-2 occupancies of four stories or less in height having no interior corridors.

54. The amendment of Section 905.4, entitled **Location of Class I standpipe hose connections**, by amending Items 1, 3 and 5, and adding Item 7 to read as follows:

1. In every required exit stairway, a hose connection shall be provided for each story above and below grade plane. Hose connections shall be located at an intermediate landing between stories, unless otherwise approved by the fire code official.
2. {No change}
3. In every exit passageway, at the entrance from the exit passageway to other areas of a building.

   Exception: Where floor areas adjacent to an exit passageway are reachable from an exit stairway hose connection by a 30-foot (9144 mm) hose stream from a nozzle attached to 100 feet (30 480 mm) of hose, a hose connection shall not be required at the entrance from the exit passageway to other areas of the building.
4. {No change}
5. Where the roof has a slope of less than four units vertical in 12 units horizontal (33.3-percent slope), each standpipe shall be provided with a two-way a hose connection shall be located to serve the roof or at the highest landing of an exit stairway with stair access to the roof provided in accordance with Section 1011.12.
6. {No change}
7. When required by this Chapter, standpipe connections shall be placed adjacent to all required exits to the structure and at two hundred feet (200’) intervals along major corridors thereafter, or as otherwise approved by the fire code official.

55. The amendment of Section 905.9, entitled **Valve supervision**, to add a second paragraph after the Exceptions to read as follows:

Sprinkler and standpipe system water-flow detectors shall be provided for each floor tap to the sprinkler system and shall cause an alarm upon detection of water flow for more than 45 seconds. All control valves in the sprinkler and standpipe systems except for fire department hose connection valves shall be electrically supervised to initiate a supervisory signal at the central station upon tampering.

56. The amendment of Section 906.1, entitled **Where Required**, by the deletion of the Exception under Paragraph 1.

57. The amendment of Section 907.1.2, entitled **Fire alarm shop drawings**, by adding Sections 907.1.2.1, 907.1.2.2 and 907.1.2.3 to read as follows:

907.1.2.1 Fire alarm control panel. The fire alarm control panel shall be installed in an approved location adjacent to the main entrance to the building unless otherwise approved by the Fire Code Official.

907.1.2.2 Key/Codes. Fire alarm control panel functions such as silence and reset shall be operable without the use of a key or code. The panel cover may be locked, but the function keys cannot require a key or code.

907.1.2.3 Alarm verification. Alarm verification shall be provided for smoke detectors. Alarm verification shall be provided at the fire alarm control panel when more than thirty (30) detectors are installed.

Exception: Alarm verification is not required for single station type smoke detectors.

58. The amendment of Section 907.1, entitled **General**, by adding Section 907.1.4 to read as follows:

907.1.4 Design Standards. Fire alarm systems, automatic fire detectors, emergency voice alarm communication systems and notification devices shall be designed, installed and maintained in accordance with NFPA 72 and local amendments.

All alarm systems new or replacement serving 50 or more alarm initiating devices shall be addressable fire detection systems. Alarm systems serving more than 75 smoke detectors or more than 200 total fire alarm devices shall be analog intelligent addressable fire detection systems.

Exception: Existing systems need not comply unless the total system remodel or expansion initiated after October 1998 exceeds 30% of the building. When cumulative building remodel or expansion exceeds 50%, the building must comply within 18 months of permit application.

59. The amendment of Section 907.2.3, entitled **Group E**, to read as follows:

907.2.3 Group E. A manual fire alarm system shall be installed in Group E educational occupancies. When automatic sprinkler systems or smoke detectors are installed, such systems or detectors shall be connected to the building fire alarm system.

An approved smoke detection system shall be installed in Group E day care occupancies.

Unless separated by a minimum of 100′ open space, all buildings, whether portable buildings or the main building, will be considered one building for alarm occupant load consideration and interconnection of alarm systems.

60. The amendment of Section 907.2.3, entitled **Group E**, by the amendment of Exception 1 and the addition of Exceptions 1.1 and 1.2, to read as follows:

Exceptions:

1. Group E educational and day care occupancies with an occupant load of less than 50 when provided with an approved automatic sprinkler system.

1.1 Portable/Temporary buildings in Group E Educational occupancies with manual fire alarm systems are not required to be connected to the alarm system in the main building.

1.2 Residential in-home day care with not more than 12 children may use interconnected single station detectors in all habitable rooms. (For care of more than five children 2½ or less years of age, see Section 907.2.6.)

61. The amendment of Section 907.2.8, entitled **Group R-1**, by adding Section 907.2.8.4, entitled **Carbon Monoxide Detectors**, to read as follows:

907.2.8.4 Carbon Monoxide Detectors. In new and existing hotels and motels, carbon monoxide detectors shall be provided in all locations where there is gas-fired equipment, such as, but not limited to, dryers, HVAC, or hot water heaters. When the building is equipped with a fire alarm system, the carbon monoxide detectors shall be connected in such a manner as to cause the Fire Alarm system to sound an alarm when the carbon monoxide goes into alarm.

62. The amendment of Section 907.2.13, entitled **High-rise buildings**, to change Exception 3 to read as follows:

3. Open air portions of buildings with an occupancy in Group A-5 in accordance with Section 303.1 of the *International Building Code,* however, this exception does not apply to accessory uses including, but not limited to, sky boxes, restaurants and similarly enclosed areas.

63. The amendment of Section 907.4.2, entitled **Manual fire alarm boxes**, by adding Section 907.4.2.7, entitled **Type**, to read as follows:

907.4.2.7 Type. Manual alarm initiating devices shall be an approved double action type.

64. The amendment of Section 907.6.1, entitled **Wiring**, by adding Section 907.6.1.1, entitled **Wiring Installation**, to read as follows:

907.6.1.1 Wiring Installation. All fire alarm systems shall be installed in such a manner that the failure of any single alarm-actuating or alarm-indicating device will not interfere with the normal operation of any other such devices. All systems shall be Class “A” wired with a minimum of six feet separation between supply and return loops. IDC – Class “A” style – D – SLC Class “A” style 6 – notification Class “B” Style Y.

65. The amendment of Section 907.6.3, entitled **Initiating device identification**, by deleting all four Exceptions.

66. The amendment of 907.6.4, entitled **Zones**, to read as follows:

907.6.4 Zones. Each floor shall be zoned separately and a zone shall not exceed 22,500 square feet (1860 m^2). The length of any zone shall not exceed 300 feet (91 440 mm) in any direction. A maximum of one (1) water flow switch or three (3) tamper switches, five (5) pull stations or ten (10) smoke or heat detectors may be interconnected to be upon a single zone of a fire alarm control panel.

Exceptions:
1. Automatic sprinkler system zones shall not exceed the area permitted by NFPA 13
2. Addressable systems.

67. The amendment of 907.6.4.2, entitled **High-rise buildings**, to read as follows:

907.6.4.2 High-rise buildings. In buildings that have floors located more than 75 feet (16 764 mm) above the lowest level of fire department vehicle access, a separate zone by floor shall be provided for all of the following types of alarm-initiating devices where provided:
1. Smoke detectors.
2. Sprinkler water-flow.
3. Manual fire alarm boxes.
4. Other approved types of automatic fire detection devices or suppression systems.

Exception: Addressable systems.

68. The amendment of Section 907.6.6, entitled **Monitoring**, to read as follows:

907.6.6 Monitoring. Where required by this chapter, an approved UL listed central station, with a dual path communicator, in accordance with NFPA 72 shall monitor fire alarm systems.

Exception: Supervisory service is not required for automatic sprinkler systems in one- and two-family dwellings.

69. The amendment of Section 907.6.6, entitled **Monitoring**, by adding Section 907.6.6.3 to read as follows:

907.6.6.3 Local alarm system. When an automatic fire alarm system is not monitored by an approved central station alarm company, an external weatherproof, audible/visual alarm sounding device shall be provided in an approved location with an approved sign, with a minimum of four-inch (4") letters, reading "WHEN ALARM SOUNDS, CALL FIRE DEPARTMENT" adjacent to the alarm-sounding device.

An approved permanent sign reading "LOCAL ALARM ONLY – CALL FIRE DEPARTMENT" shall be provided on or adjacent to the fire alarm control panel and all manual fire alarm pull stations.

70. The amendment of Section 909, entitled **SMOKE CONTROL SYSTEMS**, by adding a new Section 909.22, entitled **Stairway or ramp pressurization alternative**, and subsections, to read as follows:

909.22 Stairway or ramp pressurization alternative. Where the building is equipped throughout with an automatic sprinkler system in accordance with Section 903.3.1.1 and the stair pressurization alternative is chosen for compliance with Building Code requirements for a smokeproof enclosure, interior exit stairways or ramps shall be pressurized to a minimum of 0.10 inches of water (25 Pa) and a maximum of 0.35 inches of water (87 Pa) in the shaft relative to the building measured with all interior exit stairway and ramp doors closed under maximum anticipated conditions of stack effect and wind effect. Such systems shall comply with Section 909, including the installation of a separate fire-fighter's smoke control panel as per Section 909.16, and a Smoke Control Permit shall be required from the Fire Department as per Section 105.7.

909.22.1 Ventilating equipment. The activation of ventilating equipment for the stair or ramp pressurization system shall be by smoke detectors installed at each floor level at an approved location at the entrance to the smokeproof enclosure. When the closing device for the stairway or ramp shaft and vestibule doors is activated by smoke detection or power failure, mechanical equipment shall activate and operate at the required performance levels. Smoke detectors shall be installed in accordance with Section 907.3.

909.22.1.1 Ventilation systems. Smokeproof enclosure ventilation systems shall be independent of other building ventilation systems. The equipment, control wiring, power wiring and ductwork shall comply with one of the following:

1. Equipment, control wiring, power wiring and ductwork shall be located exterior to the building and directly connected to the smokeproof enclosure or connected to the smokeproof enclosure by ductwork enclosed by not less than 2-hour fire barriers constructed in accordance with Section 707 of the Building Code or horizontal assemblies constructed in accordance with Section 711 of the Building Code, or both.
2. Equipment, control wiring, power wiring and ductwork shall be located within the smokeproof enclosure with intake or exhaust directly from and to the outside or through ductwork enclosed by not less than 2-hour barriers constructed in accordance with Section 707 of the Building Code or horizontal assemblies constructed in accordance with Section 711 of the Building Code, or both.
3. Equipment, control wiring, power wiring and ductwork shall be located within the building if separated from the remainder of the building, including other mechanical equipment, by not less than 2-hour fire barriers constructed in accordance with Section 707 of the Building Code or horizontal assemblies constructed in accordance with Section 711 of the Building Code, or both.

   Exceptions:
   1. Control wiring and power wiring utilizing a 2-hour rated cable or cable system.
   2. Where encased with not less than 2 inches (51 mm) of concrete.
   3. Control wiring and power wiring protected by a listed electrical circuit protective system with a fire-resistance rating of not less than 2 hours.

909.22.1.2 Standby power. Mechanical vestibule and stairway and ramp shaft ventilation systems and automatic fire detection systems shall be provided with standby power in accordance with Section 2702 of the Building Code.

909.22.1.3 Acceptance and testing. Before the mechanical equipment is approved, the system shall be tested in the presence of the fire code official to confirm that the system is operating in compliance with these requirements.

71. The amendment of Section 910.2, entitled **Where required**, by changing Exceptions 2 and 3 to read as follows:

    2. Only manual smoke and heat removal shall be required in areas of buildings equipped with early suppression fast-response (ESFR) sprinklers. Automatic smoke and heat removal is prohibited.
    3. Only manual smoke and heat removal shall not be required in areas of buildings equipped with control mode special application sprinklers with a response time index of $50(m*S)^{1/2}$ or less that are listed to control a fire in stored commodities with 12 or fewer sprinklers. Automatic smoke and heat removal is prohibited.

72. The amendment of Section 910.2, entitled **Where required**, by adding Section 910.2.3, entitled **Group H**, with exceptions to read as follows:

    910.2.3 Group H. Buildings and portions thereof used as a Group H occupancy as follows:

    1. In occupancies classified as Group H-2 or H-3, any of which are more than 15,000 square feet (1394 m^2) in single floor area.

       Exception: Buildings of noncombustible construction containing only noncombustible materials.

    2. In areas of buildings in Group H used for storing Class 2, 3, and 4 liquid and solid oxidizers, Class 1 and unclassified detonable organic peroxides, Class 3 and 4 unstable (reactive) materials, or Class 2 or 3 water-reactive materials as required for a high-hazard commodity classification.

       Exception: Buildings of noncombustible construction containing only noncombustible materials.

73. The amendment of Section 910.3, entitled **Smoke and heat vent locations**, by adding section 910.3.4, entitled **Vent operation**, to read as follows:

910.3.4 Vent operation. Smoke and heat vents shall be capable of being operated by approved automatic and manual means. Automatic operation of smoke and heat vents shall conform to the provisions of Sections 910.3.2.1 through 910.3.2.3.

910.3.4.1 Sprinklered buildings. Where installed in buildings equipped with an approved automatic sprinkler system, smoke and heat vents shall be designed to operate automatically.

The automatic operating mechanism of the smoke and heat vents shall operate at a temperature rating at least 100 degrees F (approximately 38 degrees Celsius) greater than the temperature rating of the sprinklers installed.

Exception: Manual only system per Section 910.2.

910.3.4.2 Nonsprinklered buildings. Where installed in buildings not equipped with an approved automatic sprinkler system, smoke and heat vents shall operate automatically by actuation of a heat-responsive device rated at between 100°F (56°C) and 220°F (122°C) above ambient.

Exception: Listed gravity-operated drop out vents.

74. The amendment of Section 910.4.3.1, entitled **Makeup air**, to read as follows:

910.4.3.1 Makeup air. Makeup air openings shall be provided within 6 feet (1829 mm) of the floor level. Operation of makeup air openings shall be automatic. The minimum gross area of makeup air inlets shall be 8 square feet per 1,000 cubic feet per minute (0.74 m2 per 0.4719 m3/s) of smoke exhaust.

75. The amendment of Section 910.4.4, entitled **Activation**, to read as follows:

910.4.4 Activation. The mechanical smoke removal system shall be activated automatically by the automatic sprinkler system or by an

approved fire detection system. Individual manual controls shall also be provided.

Exception: Manual only systems per Section 910.2.

76. The amendment of Section 912.2, entitled **Location**, by adding Section 912.2.3, entitled **Hydrant distance**, to read as follows:

912.2.3 Hydrant distance. An approved fire hydrant shall be located within 100 feet of the fire department connection as the fire hose lays along an unobstructed path.

77. The amendment of Section 913.2.1, **Protection of fire pump rooms**, by adding a second paragraph and exception to read as follows:

When located on the ground level at an exterior wall, the fire pump room shall be provided with an exterior fire department access door that is not less than 3 ft. in width and 6 ft. – 8 in. in height, regardless of any interior doors that are provided. A key box shall be provided at this door, as required by Section 506.1.

Exception: When it is necessary to locate the fire pump room on other levels or not at an exterior wall, the corridor leading to the fire pump room access from the exterior of the building shall be provided with equivalent fire resistance as that required for the pump room, or as approved by the fire code official. Access keys shall be provided in the key box as required by Section 506.1.

78. The amendment of Section 1006.2.2, entitled **Egress based on use**, by adding a new Section 1006.2.2.6, entitled **Electrical Rooms**, to read as follows:

1006.2.2.6 Electrical Rooms. For electrical rooms, special exiting requirements may apply. Reference the electrical code as adopted.

79. The amendment of Section 1009.1, entitled **Accessible means of egress required**, by adding Exception 4:

4. Buildings regulated under State Law and built in accordance with State registered plans, including any

variances or waivers granted by the State, shall be deemed to be in compliance with the requirements of Section 1009.

80. The amendment of Section 1010.1.9.4, entitled **Bolt Locks**, by changing Exceptions 3 and 4 to read as follows:

3. Where a pair of doors serves an occupant load of less than 50 persons in a Group B, F, M or S occupancy, manually operated edge- or surface- mounted bolts are permitted on the inactive leaf. The inactive leaf shall not contain doorknobs, panic bars or similar operating hardware.
4. Where a pair of doors serves a Group A, B, F, M or S occupancy, manually operated edge- or surface- mounted bolts are permitted on the inactive leaf provided such inactive leaf is not needed to meet egress capacity requirements and the building is equipped throughout with an automatic sprinkler system in accordance with Section 903.3.1.1. The inactive leaf shall not contain doorknobs, panic bars or similar operating hardware.

81. The amendment of Section 1010.1.9.7, entitled **Delayed egress locks**, by amending the first paragraph to read as follows:

1010.1.9.7 Delayed egress locks. A permit from the Fire Department is required prior to the installation of any delayed egress locks or other special locking systems. Approved, listed, delayed egress locks shall be permitted to be installed on doors serving any occupancy except Group A, E and H occupancies in buildings which are equipped throughout with an automatic sprinkler system in accordance with Section 903.3.1.1 and an approved automatic smoke or heat detection system installed in accordance with Section 907, provided that the doors unlock in accordance with Items 1 through 8 below. A building occupant shall not be required to pass through more than one door equipped with a delayed egress lock before entering an exit.

{Items 1-8 remain unchanged}

82. The amendment of Section 1010.1.9.9., entitled **Electromagnetically locked egress doors**, by amending the first paragraph to read as follows:

1010.1.9.9 Electromagnetically locked egress doors. Doors in the *means of egress* that are not otherwise required to have panic hardware in buildings with an occupancy in Group A, B, E, I-1, I-2, M, R-1 or R-2 and doors to tenant spaces in Group A, B, E, I-1, I-2, M, R-1 or R-2 shall be permitted to be electromagnetically locked if equipped with *listed* hardware that incorporates a built-in switch and meet the requirements below:

{Items 1-6 remain unchanged}

83. The amendment of Section 1010.1.9.11, entitled **Stairway Doors**, by adding Exception 6 to read as follows:

    6. In stairways serving more than four stories, doors can be locked from stairway side, if lock is connected to fire alarm system and key to the door is provided in a Knox Box. Activation of fire alarm system must release locks on all stairway doors.

84. The amendment of Section 1013.5, entitled **Internally illuminated exit signs**, to read as follows:

    1013.5 Internally illuminated exit signs. Electrically powered and self-luminous exit signs shall be listed and labeled in accordance with UL 294 and shall be installed in accordance with the manufacturer's instructions and Chapter 27. Exit signs shall be illuminated at all times. Photoluminescent exit signs are prohibited.

85. The addition of Section 1016.3, entitled **Electrical room means of egress**, to read as follows:

    1016.3 Electrical room means of egress. For electrical rooms containing equipment over 600 volts, see electrical code, NFPA 70, Article 110, generally.

86. The addition of Section 1017.4, entitled **Roof vent increase**, to read as follows:

    1017.4. Roof vent increase. In buildings that are one story in height, equipped with automatic heat and smoke roof vents complying with Section 910 and equipped throughout with an automatic sprinkler system

in accordance with Section 903.3.1.1, the maximum exit access travel distance shall be 400 feet for occupancies in Group F-1 or S-1.

87. The amendment of Section 1020.1, entitled **Construction**, to add an Exception 6 to read as follows:

    6. In group B occupancies, corridor walls and ceilings need not be of fire-resistive construction within a single tenant space when the space is equipped with approved automatic smoke-detection within the corridor. The actuation of any detector shall activate self-annunciating alarms audible in all areas within the corridor. Smoke detectors shall be connected to an approved automatic fire alarm system where such system is provided.

88. The amendment of Section 1029.1.1.1, entitled **Spaces under grandstands and bleachers**, by deleting it in its entirety.

89. The amendment of Section 1101.1, entitled **Scope**, by adding an Exception to read as follows:

    Exception: Components of projects regulated by and registered with Architectural Barriers Division of Texas Department of Licensing and Regulation shall be deemed to be in compliance with the requirements of this chapter.

90. The amendment of Section 1203.1, entitled **General**, to read as follows:

    1203.1 General. Buildings shall be provided with natural ventilation in accordance with Section 1203.4, or mechanical ventilation in accordance with the *International Mechanical Code*.

    Where air infiltration rate in a *dwelling unit* is 5 air changes or less per hour when tested with a blower door at a pressure 0.2-inch w.c. (50 Pa) in accordance with Section 402.4.1.2 of the *International Energy Conservation Code*, the dwelling unit shall be ventilated by mechanical means in accordance with Section 403 of the *International Mechanical Code*.

91. The amendment of Table 1505.1, entitled **MINIMUM ROOF COVERING CLASSIFICATION FOR TYPES OF**

CONSTRUCTION, by deleting footnote c and replacing footnote b with the following:

b. Non-classified roof coverings shall be permitted on buildings of U occupancies having not more than 120 sq. ft. of protected roof area. When exceeding 120 sq. ft. of protected roof area, buildings of U occupancies may use non-rated non-combustible roof coverings.

92. The amendment of Section 1505.7, entitled **Special purpose roofs**, by deleting it in its entirety.

93. The amendment of Section 1511.1, entitled **General**, by amending the first paragraph to read as follows:

1511.1 General. Materials and methods of applications used for recovering or replacing an existing roof covering shall comply with the requirements of Chapter 15. All individual replacement shingles or shakes shall be in compliance with the rating required by Table 1505.1.

94. The amendment of Section 1612.3, entitled **Establishment of flood hazard areas**, to read as follows:

1612.3 Establishment of flood hazard areas. To establish flood hazard areas, the applicable governing authority shall adopt a flood hazard map and supporting data. The flood hazard map shall include, at a minimum, areas of special flood hazard as identified by the Federal Emergency Management Agency in an engineering report entitled "The Flood Insurance Study for Tarrant County, Texas," dated September 25, 2009, as amended or revised with the accompanying Flood Insurance Rate Map (FIRM) and Flood Boundary and Floodway Map (FBFM) and related supporting data along with any revisions thereto. The adopted flood hazard map and supporting data are hereby adopted by reference and declared to be part of this section.

95. The amendment of Section 1612.3.2, entitled **Determination of impacts**, to read as follows:

1612.3.2 Determination of impacts. In flood hazard areas where design flood elevations are specified, the applicant shall provide an engineering analysis developed by a licensed professional engineer that demonstrates that the proposed work will not increase the design flood elevation or

reduce conveyance at any point within the jurisdiction in accordance with the provisions of the Design Criteria Manual and the Flood Damage Prevention Chapter of the Arlington City Code.

96. The amendment of Section 1612.4, entitled **Design and construction**, to read as follows:

1612.4 Design and construction. The design and construction of buildings and structures located in flood hazard areas, including flood hazard areas subject to high-velocity wave action, shall be in accordance with Chapter 5 of ASCE 7 and with ASCE 24 and provisions of the City of Arlington's Flood Damage Chapter.

97. The amendment of Section 1612.5, entitled **Flood hazard documentation**, to read as follows:

1612.5 Flood hazard documentation. The flood hazard documentation as identified in the City of Arlington's Flood Damage Chapter shall be prepared and sealed by a professional engineer and submitted to the building official.

98. The amendment of Section 1704.2, entitled **Special inspections and tests**, is amended to read as follows:

1704.2 Special inspections and tests. Where application is made to the Building Official for construction as specified in Section 105, the owner or the owner's authorized agent, or the registered design professional in responsible charge, other than the contractor, shall employ one or more approved agencies to provide special inspections and tests during construction on the types of work listed under Section 1705 and identify the approved agencies to the Building Official. The special inspector shall not be employed by the contractor. These special inspections and tests are in addition to the inspections identified by the Building Official that are identified in Section 110.

99. The amendment of Section 1704.2.1, entitled **Special inspector qualifications**, is amended to read as follows:

1704.2.1 Special inspector qualifications. Prior to the start of construction and or upon request, the approved agencies shall provide written documentation to the registered design professional in responsible

charge and the building official demonstrating the competence and relevant experience or training of the special inspectors who will perform the special inspections and tests during construction. Experience or training shall be considered relevant where the documented experience or training is related to the same type of special inspection or testing activities for projects of similar complexity and material qualities. These qualifications are in addition to qualifications specified in other sections of this code.

The registered design professional in responsible charge and engineers of record involved in the design of the project are permitted to act as the approved agency and their personnel are permitted to act as special inspectors for the work designed by them, provided they qualify as special inspectors.

100. The amendment of Section 1704.2.4, entitled **Report requirement**, is amended to read as follows:

1704.2.4 Report requirement. Approved agencies shall keep records of special inspections and tests. The approved agency shall submit reports of special inspections and tests to the Building Official upon request, and to the registered design professional in responsible charge. Individual inspection reports [Reports] shall indicate that work inspected or tested was or was not completed in conformance to approved construction documents. Discrepancies shall be brought to the immediate attention of the contractor for correction. If they are not corrected, the discrepancies shall be brought to the attention of the building official and the registered design professional in responsible charge prior to the completion of that phase of the work. A final report documenting required special inspections and tests, and the correction of any discrepancies noted in the inspections or tests, shall be submitted at a point in time agreed upon prior to the start of work by the owner or the owner's authorized agent to the building official.

101. The amendment of Section 1704.2.5.2, entitled **Fabricator approval**, to read as follows:

1704.2.5.1 Fabricator approval. Special inspections during fabrications required by Section 1704 are not required where the work is done on the premises of a fabricator registered and approved to perform such work without special inspection. Approval shall be based upon review of the

fabricator's written procedural and quality control manuals and periodic auditing of fabrication practices by an approved agency, or a fabricator that is enrolled in a nationally accepted inspections program. At completion of fabrication, the acceptable or approved fabricator shall submit a certificate of compliance to the owner or the owner's authorized agent or the registered design professional in responsible charge, stating that the work was performed in accordance with the approved construction documents. The certificate of compliance shall also be made available to the Building Official upon request.

102. The amendment of Section 1807.2, entitled **Retaining walls**, to read as follows:

1807.2 Retaining walls. Retaining walls exceeding four feet (4′) in developed height (the height from the base of the foundation to the top of the wall) at any point shall be designed by a professional engineer. A wall built in tiers shall be considered a single wall in developed height when the base of the upper tier is set back from the base of the lower tier less than one and one-half (1½) times the developed height of the wall section below. Walls supporting an imposed load such as a building, driveway or other permanent construction closer to the wall than one and one-half (1½) times the developed height of the wall shall be designed by a professional engineer.

When required to be designed by an engineer the design shall be in accordance with Sections 1807.2.1 through 1807.2.3.

103. The amendment of Section 2503.1, entitled **Inspection**, to read as follows:

2503.1 Inspection. Gypsum in fire-resistive construction and lath shall be inspected.

104. The amendment of Section 2901.1, entitled **Scope**, to add a paragraph to read as follows:

The provisions of this Chapter are meant to work in coordination with the provisions of Chapter 4 of the International Plumbing Code. Should any conflicts arise between the two chapters, the Building Official shall determine which provision applies.

105. The amendment of Section 2902.1, entitled **Minimum number of fixtures**, to read as follows:

2902.1 Minimum number of fixtures. Plumbing fixtures shall be provided for the type of occupancy and in the minimum number shown in Table 2902.1. Types of occupancies not shown in Table 2902.1 shall be considered individually by the building official. The number of occupants shall be determined by this code unless sufficient data is approved by the building official for a different number of occupants. Occupancy classification shall be determined in accordance with Chapter 3.

106. The addition of Section 2902.1.3, entitled **Additional fixtures for food preparation facilities**, to read as follows:

2902.1.3 Additional fixtures for food preparation facilities. In addition to the fixtures required in this Chapter, all food service facilities shall be provided with additional fixtures set out in this section.

2902.1.3.1 Hand washing lavatory. At least one hand washing lavatory shall be provided for use by employees that is accessible from food preparation, food dispensing and ware washing areas. Additional hand washing lavatories may be required based on convenience of use by employees.

2902.1.3.2 Service sink. In new or remodeled food service establishments, at least one service sink or one floor sink shall be provided so that it is conveniently located for the cleaning of mops or similar wet floor cleaning tools and for the disposal of mop water and similar liquid waste. The location of the service sink(s) and/or mop sink(s) shall be approved by the City of Arlington health department.

107. The amendment of Table 2902.1, entitled **MINIMUM NUMBER OF REQUIRED PLUMBING FIXTURES**, to add footnote “f”, “g”, and “h” to read as follows:

f. The minimum number of drinking fountains shall comply with Table 2902.1 and Chapter 11. Drinking fountains shall not be installed in toilet rooms.

g. Drinking fountains are not required for an occupant load 30 or less and for dining and/or drinking establishments.

h. Where urinals are provided, urinals shall not be substituted for more than 67% of the required water closets in assembly and educational *occupancies*. Urinals shall not be substituted for more than 50% of the required water closets in all other *occupancies*.

108. The amendment of Section 2902.2, entitled **Separate facilities**, to add Exceptions 4 and 5 to read as follows:

4. Separate facilities shall not be required in business occupancies in which the maximum occupant load is 50 or less.
5. Separate facilities shall not be required in medical offices classified as business occupancies.

109. The amendment of Section 3002.1, entitled **Hoistway enclosure protection**, to add Exceptions to read as follows:

Exceptions:
1. Elevators wholly located within atriums complying with Section 404 shall not require hoistway enclosure protection.
2. Elevators in open or enclosed parking garages that serve only the parking garage, and complying with Sections 406.5 and 406.6, respectively, shall not require hoistway enclosure protection.

110. The amendment of Section 3005.4, entitled **Machine rooms, control rooms, machinery spaces and control spaces**, to read as follows:

Section 3005.4 Machine rooms, control rooms, machinery spaces and control spaces. Elevator machine rooms, control rooms, control spaces and machinery spaces shall be enclosed with fire barriers constructed in accordance with Section 707 or horizontal assemblies constructed in accordance with Section 711, or both.

111. The amendment of Section 3005, entitled **MACHINE ROOMS**, to add Section 3005.7, et seq., to read as follows:

3005.7 Fire Protection in Machine rooms, control rooms, machinery spaces and control spaces.

3005.7.1 Automatic sprinkler system. The building shall be equipped throughout with an automatic sprinkler system in accordance with Section 903.3.1.1, except as otherwise permitted by Section 903.3.1.1.1 and as prohibited by Section 3005.7.2.1.

3005.7.2.1 Prohibited locations. Automatic sprinklers shall not be installed in machine rooms, elevator machinery spaces, control rooms, control spaces and elevator hoist-ways.

3005.7.2.2 Sprinkler system monitoring. The sprinkler system shall have a sprinkler control valve supervisory switch and water-flow initiating device provided for each floor that is monitored by the building's fire alarm system.

3005.7.3 Water protection. An approved method to prevent water from infiltrating into the hoistway enclosure from the operation of the automatic sprinkler system outside the elevator lobby shall be provided.

3005.7.4 Shunt trip. Means for elevator shutdown in accordance with Section 3005.5 shall not be installed.

112. The amendment of Section 3005, entitled **MACHINE ROOMS**, to add Section 3005.8 to read as follows:

3005.8 Storage. Storage shall not be allowed within the elevator machine room, control room, machinery spaces and or control spaces. Provide approved signage at each entry to the above listed locations stating: "No Storage Allowed."

113. The amendment of Section 3006.2, entitled **Hoistway opening protection required**, to add Item 5 to read as follows:

5. The building is a high rise and the elevator hoistway is more than 75 feet (22 860 mm) in height. The height of the hoistway shall be measured from the lowest floor at or above grade to the highest floors served by the hoistway.

114. The amendment of Section 3109, entitled **SWIMMING POOLS, SPAS AND HOT TUBS**, by replacing said section to read as follows:

SECTION 3109
SWIMMING POOL ENCLOSURES AND SAFETY DEVICES

3109.1 General. Swimming pools shall comply with the requirements of this section and other applicable sections of this code.

3109.2 Definition. The following word and term shall, for the purposes of this section and as used elsewhere in this code, have the meaning shown herein.

SWIMMING POOLS. Any structure intended for swimming, recreational bathing or wading that contains water over 24 inches (610 mm) deep. This includes in-ground, above-ground and on-ground pools; hot tubs; spas and fixed-in-place wading pools.

3109.3 Public Swimming Pools. Public swimming pools (pools not accessory to a 1- or 2-family dwelling) shall be completely enclosed by a fence that complies with the Health and Sanitation Chapter, Article VII, Public Swimming Pool, Section 7.01. Driveway access gates across a paved or improved surface intended for regular vehicle access shall not be located in a swimming pool barrier.

3109.4 Residential Swimming Pools. See Section 1.04(D) of the "Construction" Chapter of the Arlington City Code.

3109.5 Entrapment Avoidance. Suction outlets shall be designed and installed in accordance with ANSI/APSP-7.

D. The amendment of the following I.R.C. provisions:

1. The amendment of Section 101.1, entitled **Title**, to read as follows:

101.1 Title. These provisions shall be known as the Residential Code for One- and Two-family Dwellings of the City of Arlington, Texas, and shall be cited as such and will be referred to herein as "this code."

2. The amendment of Section 102.4, entitled **Referenced codes and standards**, to read as follows:

102.4 Referenced codes and standards. The codes, when specifically adopted, and standards referenced in this code shall be considered part of

the requirements of this code to the prescribed extent of each such reference. Whenever amendments have been adopted to the referenced codes and standards, each reference to said code and standards shall be considered to reference the amendments as well. Any reference made to NFPA 70, or ICC Electrical Code shall mean the Electrical Code as adopted.

Where differences occur between provisions of this code and referenced codes and standards, the provisions of this code shall apply.

Exception: Where enforcement of a code provision would violate the conditions of the listing of the equipment or appliance, the conditions of the listing and manufacturer's instructions shall apply.

3. The amendment of Section 104.10.1, entitled **Flood hazard areas**, by deleting said section in its entirety.

4. The amendment of Section 105.3.1.1, entitled **Determination of substantially improved or substantially damaged existing buildings in flood hazard areas**, by deleting said section in its entirety.

5. The amendment of Section 106.1.4, entitled **Information for construction in flood hazard areas**, by deleting said section in its entirety.

6. The amendment of Section 110, entitled **CERTIFICATE OF OCCUPANCY**, by deleting said section in its entirety.

7. The amendment of Section R114, entitled **STOP WORK ORDER**, to read as follows:

SECTION 114
STOP WORK ORDER

114.1 Stop Work Order. Whenever any work is being done contrary to the provisions of this Code, the Building Official may order the work stopped by notice in writing served on any persons engaged in the doing or causing such work to be done. Any such person shall forthwith stop such work until:

a. He or she is authorized by the Building Official to proceed with the work; or

b. An appeal perfected pursuant to Section 2.06 of Article II has resulted in a waiver of the condition causing the stop order, or a finding that there is no cause for a stop order.

Failure to stop such work, in addition to penalties and remedies elsewhere set forth, shall void any appeal.

8. The amendment of Section 202, entitled **Definitions**, to revise the definition of **Townhouse** and add the definitions of **Glazing Area**, **Reclaimed Water**, and **Shall** to read as follows:

GLAZING AREA. Total area of the glazed fenestration measured using the rough opening and including sash, curbing or other framing elements that enclose conditioned space. Glazing area includes the area of glazed fenestration assemblies in walls bounding conditioned basements. For doors where the daylight opening area is less than 50 percent of the door area, the glazing area is the daylight opening area. For all other doors, the glazing area is the rough opening area for the door including the door and the frame.

RECLAIMED WATER or "Recycled Water" means domestic or municipal wastewater which has been treated to a quality suitable for beneficial use. Reclaimed or recycled water is non-potable water.

SHALL, as it applies to an act or duty to be performed by the Building Official pursuant to any section of this Building Code, is discretionary. Its use in all other applications in this Code shall be mandatory.

TOWNHOUSE. A single-family dwelling unit constructed in a group of attached units separated by property lines in which each unit extends from foundation to roof and with yard or public way on at least two sides.

9. The amendment of Table 301.2(1), entitled **CLIMATIC AND GEOGRAPHIC DESIGN CRITERIA**, to fill in as follows:

GROUND SNOW LOAD	WIND DESIGN				SEISMIC DESIGN CATEGORY	SUBJECT TO DAMAGE FROM			WINTER DESIGN TEMP[e]	ICE BARRIER UNDER-LAYMENT[h]	FLOOD HAZARDS[g]	AIR FREEZING INDEX[i]	MEAN ANNUAL TEMP[j]
5 lb/ft	SPEED[d] (MPH)	Topographic Effects[k]	Special Wind Region[L]	Windborne Debris Zone[m]	A	Weathering[a]	Frost Line Depth[b]	Termite[c]					
	115 (3 sec-gust)/ 76 fastest mile	No	No	No		Moderate	6”	Very Heavy	22^0 F	No	Local Code	150	64.9^0 F

10. The amendment of Section 301.2.4, **Floodplain construction**, to read as follows:

301.2.4 Construction in flood hazard areas. Permits for the construction, reconstruction, rehabilitation, addition or other improvements shall be performed in accordance with the provisions of SECTION 1612 FLOOD LOADS of the International Building Code, as amended.

11. The amendment of Section 302.1, entitled **Exterior walls**, by adding Exception 6, to read as follows:

6. Open metal carport structures may be constructed within zero (0) feet of the property line without fire-resistive or opening projection when the location of such is approved as required by other City ordinances.

11.5 The amendment of Section R302.2, entitled **Townhouses**, by adding Item 3 to read as follows:

3. The common wall shall be not less than two 1-hour fire-resistance-rated wall assemblies tested in accordance with ASTM E 119 or UL 263. Plumbing and mechanical equipment shall be allowed in such walls adjacent to the dwelling unit being served.

12. The amendment of Section 302.3, entitled **Two-family dwellings**, by adding Exception 3 to read as follows:

    3. Two-family dwelling units that are also divided by a property line through the structure shall be separated as required for townhouses.

13. The amendment of Section 302.5.1, entitled **Opening protection**, to read as follows:

    302.5.1 Opening protection. Openings from a private garage directly into a room used for sleeping purposes shall not be permitted. Other openings between the garage and residence shall be equipped with solid wood doors not less than 13/8 inches (35 mm) in thickness, solid or honeycomb core steel doors not less than 13/8 inches (35 mm) thick, or 20-minute fire-rated doors.

14. The amendment of Section 302.7, entitled **Under stair protection**, to read as follows:

    302.7 Under stair protection. Enclosed accessible space under stairs shall have walls, under stair surface and any soffits protected on the enclosed side with 5/8-inch (15.8 mm) fire-rated gypsum board or one-hour fire-resistive construction.

15. The amendment of Section 303.3, entitled **Bathrooms**, to amend the Exception to add the following sentence:

    Exhaust air from the space shall be exhausted out to the outdoors unless the space contains only a water closet, a lavatory, or water closet and a lavatory may be ventilated with an approved mechanical recirculating fan or similar device designed to remove odors from the air.

16. The amendment of Section 305.1, entitled **Minimum height**, to add Exception 4 to read as follows:

4. In one- and two-family dwellings, beams or girders spaced not less than 4 feet (1219 mm) on center and projecting not more than 6 inches (152 mm) below the required ceiling height.

17. The amendment of SECTION 313, entitled **AUTOMATIC FIRE SPRINKLER SYSTEMS**, to read as follows:

SECTION 313
AUTOMATIC FIRE SPRINKLER SYSTEMS

313.1 Design and installation. Automatic fire sprinkler systems, when installed and/or repaired, shall comply with Section 903.3 of the 2015 Edition of the International Building Code as adopted.

18. The amendment of Section 315.2.2, entitled **Alterations, repairs and additions**, to amend Exception 2 to read as follows:

2. Installation, alteration or repairs of electrical powered plumbing or mechanical systems are exempt from the requirements of this section.

19. The amendment of Section 315.5, entitled **Power source**, to read as follows:

315.5 Power source. Carbon monoxide alarms shall receive their primary power from the building wiring when such wiring is served from a commercial source, and when primary power is interrupted, shall receive power from a battery. Wiring shall be permanent and without a disconnecting switch other than those required for over current protection.

Exception: Hard-wiring of carbon monoxide alarms in existing areas shall not be required where the addition or alterations do not result in the removal of interior wall or ceiling finishes exposing the structure, unless there is an attic, crawl space or basement available which could provide access for hard wiring and interconnection without the removal of interior finishes.

20. The amendment of SECTION 322, entitled **FLOOD RESISTANT CONSTRUCTION**, to read as follows:

SECTION 322
FLOOD RESISTANT CONSTRUCTION

322.1 General. Construction in flood hazard areas. Permits for the construction, reconstruction, rehabilitation, addition or other improvements shall be performed in accordance with the provisions of SECTION 1612 FLOOD LOADS of the International Building Code, as amended.

{The remainder of this Section is deleted in its entirety}

21. The amendment of Section 401.2, entitled **Requirements**, to amend by adding a new paragraph following the existing paragraph to read as follows.

Section 401.2. Requirements.
Foundation construction shall be capable of accommodating all loads in accordance with Section 301 and of transmitting the resulting loads to the supporting soil. Fill soils that support footings and foundations shall be designed, installed and tested in accordance with accepted engineering practice. Gravel fill used as footings for wood and precast concrete foundations shall comply with Section 403. Every foundation and/or footing, or any size addition to an existing post-tension foundation, regulated by this code shall be designed and sealed by a Texas-registered engineer.

22. The amendment of Section 602.6.1, entitled **Drilling and notching of top plate**, to read as follows:

602.6.1 Drilling and notching of top plate. When piping or ductwork is placed in or partly in an exterior wall or interior load-bearing wall, necessitating cutting, drilling or notching of the top plate by more than 50 percent of its width, a galvanized metal tie not less than 0.054 inch thick (1.37 mm) (16 Ga) and 5 inches (127 mm) wide shall be fastened across and to the plate at each side of the opening with not less than eight 10d (0.148 inch diameter) having a minimum length of 1 ½ inches (38 mm) at each side or equivalent. Fasteners will be offset to prevent splitting of the top plate material. The metal tie must extend a minimum of 6 inches past the opening. See Figure 602.6.1.

Exception: When the entire side of the wall with the notch or cut is covered by wood structural panel sheathing.

23. The amendment of Figure 602.6.1, entitled **TOP PLATE FRAMING TO ACCOMMODATE PIPING**, to appear as follows:

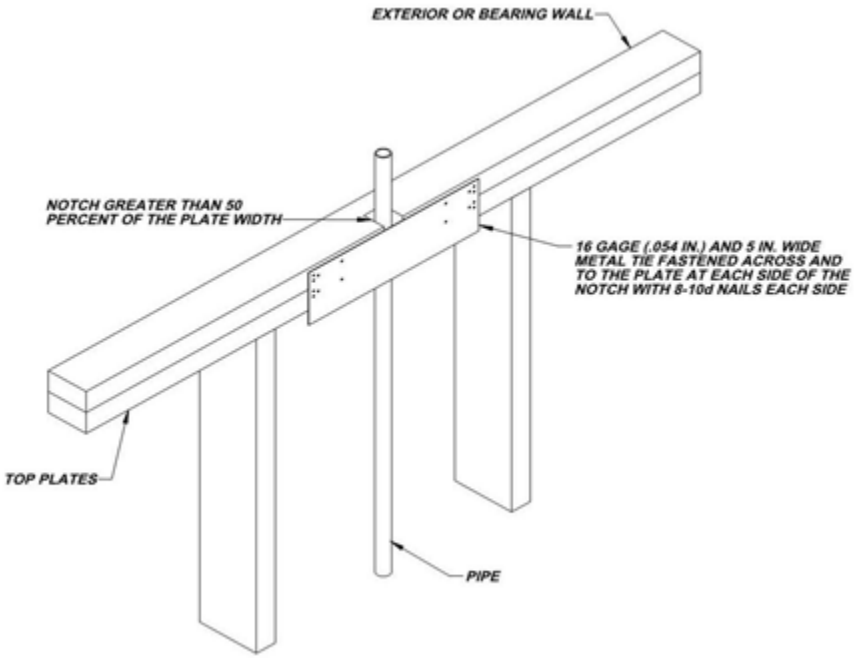

24. The amendment of Section 703.8.4.1, entitled **Size and spacing**, to add a second paragraph to read as follows:
In stud framed exterior wall**s**, all ties shall be anchored to studs as follows:
    1. When studs are 16 in (407 mm) o.c., stud ties shall be spaced no further apart than 24 in (737 mm) vertically starting approximately 12 in (381 mm) from the foundation; or
    2. When studs are 24 in (610 mm) o.c., stud ties shall be spaced no further apart than 16 in (483 mm) vertically starting approximately 8 in (254 mm) from the foundation.

25. The amendment of Section 902.1, entitled **Roofing covering materials**, to read as follows:

902.1 Roofing covering materials. Roofs shall be covered with materials as set forth in Sections 904 and 905. Class A, B, or C roofing shall be

installed. Class A, B, and C roofing required by this section to be listed shall be tested in accordance with UL 790 or ASTM E 108.

Exceptions:

1. Class A roof assemblies include those with coverings of brick, masonry and exposed concrete roof deck.
2. Class A roof assemblies include ferrous or copper shingles or sheets, metal sheets and shingles, clay or concrete roof tile, or slate installed on noncombustible decks.
3. Class A roof assemblies include minimum 16 ounces per square foot copper sheets installed over combustible decks.
4. Class A roof assemblies include slate installed over underlayment over combustible decks.
5. Non-classified roof coverings shall be permitted on one-story detached *accessory structures* used as tool and storage sheds, playhouses and similar uses, provided the floor area does not exceed 200 square feet.

26. The amendment of Chapter 11, entitled **Energy Efficiency**, by deleting it in its entirety and replacing with the following:

1101.1 Scope. This chapter regulates the energy efficiency for the design and construction of buildings regulated by this code.

1101.2 Compliance. Compliance shall be demonstrated by meeting the requirements of the residential provisions of 2015 International Energy Conservation Code.

27. The amendment of Section 1305.1.3, entitled **Appliances in attics**, to read as follows:

1305.1.3 Appliances in attics. Attics containing appliances shall be provided with an opening and a clear and unobstructed passageway large enough to allow removal of the largest appliance, but not less than 30 inches (762 mm) high and 22 inches (559 mm) wide and not more than 20 feet (6096 mm) long measured along the centerline of the passageway from the opening to the appliance. The passageway shall have continuous solid flooring in accordance with Chapter 5 not less than 24 inches (610 mm) wide. A level service space not less than 30 inches (762 mm) deep and 30 inches (762 mm) wide shall be present along all sides of the appliance where access is required. The clear access opening dimensions

shall be a minimum of 20 inches by 30 inches (508 mm by 762 mm), or larger and large enough to allow removal of the largest appliance. A walkway to an appliance shall be rated as a floor as approved by the building official. As a minimum, for access to the attic space, provide one of the following:

1. A permanent stair.

2. A pull down stair with a minimum 300 lb (136 kg) capacity.

3. An *access* door from an upper floor level.

   Exceptions:
   1. The passageway and level service space are not required where the appliance can be serviced and removed through the required opening.

   2. Where the passageway is unobstructed and not less than 6 feet (1829 mm) high and 22 inches (559 mm) wide for its entire length, the passageway shall be not more than 50 feet (15 250 mm) long.

28. The amendment of Section 1305.1.3.1, entitled **Electrical requirements**, to add a sentence to read as follows:

    Low voltage wiring of 50 Volts or less shall be installed in a manner to prevent physical damage.

29. The amendment of Section 1305.1.4.3, entitled **Electrical requirements**, to add a sentence to read as follows:

    Low voltage wiring of 50 Volts or less shall be installed in a manner to prevent physical damage.

30. The amendment of Section 1411.3, entitled **Condensate disposal,** to read as follows:

    1411.3 Condensate disposal. Condensate from all cooling coils and evaporators shall be conveyed from the drain pan outlet to a sanitary sewer through a trap, by means of a direct or indirect drain. Such piping shall

maintain a minimum horizontal slope in the direction of discharge of not less than 1/8 unit vertical in 12 units horizontal (1-percent slope). Condensate shall not discharge in a publicly exposed area such as into a street, alley, sidewalk or other areas so as to cause a nuisance.

Exceptions:

1. Condensate may discharge directly to a roof drain that connects to an underground storm sewer system,

2. Condensate may discharge directly onto roofs covered with membrane type roof coverings where the condensate will drain to a roof drain that connects to an underground storm sewer system,

3. Condensate may discharge to a landscaped area containing flowers and other bedding plants other than turf. There must be five square feet of landscaped area for each ton of refrigeration, or

4. Condensate may discharge to a French drain consisting of a pit excavated below grade that is not less than 24 inches (610 mm) in any dimension. The pit shall be filled with coarse gravel and the drainpipe shall extend into the pit and be securely anchored. A single drain shall not receive the condensate discharge of more than 10 tons nominal of combined cooling capacity. The pit shall be covered with sod after inspection. The French drain shall not be located so that it will receive direct discharge from a roof or downspout.

31. The amendment of Section 1411.3.1, entitled **Auxiliary and secondary drain systems**, by amending Items 3 and 4 to read as follows:

3. An auxiliary drain pan without a separate drain line shall be installed under the coils on which condensation will occur. This pan shall be equipped with a water level detection device conforming to UL 508 that will shut off the equipment served prior to overflow of the pan. The pan shall be equipped with a fitting to allow for drainage. The auxiliary drain pan shall be constructed in accordance with Item 1 of this section. A water level detection

device may be installed only with prior approval of the building official.

4. A water level detection device conforming to UL 508 shall be installed in the primary drain line, the overflow drain line or the equipment-supplied drain pan, located at a point higher than the primary drain line connection and below the overflow rim of such pan. A water level detection device may be installed only with prior approval of the building official.

32. The amendment of Section 1411.3.1.1, entitled **Water-level monitoring devices,** to read as follows:

1411.3.1.1 Water-level monitoring devices. On down-flow units and other coils that do not have secondary drain or provisions to install a secondary or auxiliary drain pan, a water-level monitoring device shall be installed inside the primary drain pan. This device shall shut off the equipment served in the event that the primary drain becomes restricted. Devices shall not be installed in the drain line. A water level detection device may be installed only with prior approval of the building official.

33. The amendment of Section 1502.4.1, entitled **Material and size**, to read as follows:

1502.4.1 Material and size. Exhaust ducts shall have a smooth interior finish and shall be constructed of metal a minimum 0.016-inch (0.4mm) thick. The exhaust duct size shall be 4 inches (102 mm) nominal in diameter. The size of duct shall not be reduced along its developed length or at the point of termination.

34. The amendment of Section 1502.4.5.1, entitled **Specified length**, to read as follows:

1502.4.5.1 Specified length. The maximum length of the exhaust duct shall be 35 feet (10668 mm) from the connection to the transition duct from the appliance to the outlet terminal. Where fittings are used, the maximum length of the exhaust duct shall be reduced in accordance with Table M1502.4.5.1. The maximum length of the exhaust duct does not include the transition duct.

35. The deletion of Section 1502.4.5.2, **Manufacturer's instructions**, in its entirety.

36. The deletion of Section 1502.4.6, **Length identification,** in its entirety.

37. The amendment to Section 1502.4.7, **Exhaust duct required**, by deleting the Exception.

38. The amendment of Section 1503.4, entitled **Makeup air required**, to read as follows:

1503.4 Makeup air required. Exhaust hood systems capable of exhausting in excess of 400 cubic feet per minute (0.19 m3/s) shall be provided with makeup air at a rate approximately equal to the difference between the exhaust air rate and 400 cubic feet per minute. Such makeup air systems shall be equipped with a means of closure and shall be automatically controlled to start and operate simultaneously with the exhaust system.

Exception: Where all appliances in the house are of sealed combustion, power-vent, unvented, or electric, the exhaust hood system shall be permitted to exhaust up to 600 cubic feet per minute (0.28 m3/s) without providing makeup air. Exhaust hood systems capable of exhausting in excess of 600 cubic feet per minute (0.28 m3/s) shall be provided with a makeup air at a rate approximately equal to the difference between the exhaust air rate and 600 cubic feet per minute.

39. The amendment of Section 2005.2, entitled **Prohibited locations**, to read as follows:

2005.2 Prohibited locations. Fuel-fired water heaters shall not be installed in a room used as a storage closet. Water heaters located in a bedroom or bathroom shall be installed in a sealed enclosure so that combustion air will not be taken from the living space. Access to such enclosure may be from the bedroom or bathroom when through a solid door, weather-stripped in accordance with the exterior door air leakage requirements of the *International Energy Conservation Code* and equipped with an approved self-closing device. Installation of direct-vent water heaters within an enclosure is not required

40. The deletion of Section 2408.3 (305.5), **Private garages**, in its entirety.

41. The amendment of Section 2415.2 (404.2), entitled **CSST,** to add a second paragraph to read as follows:

    Both ends of each section of medium pressure gas piping shall identify its operating gas pressure with an *approved* tag. The tags are to be composed of aluminum or stainless steel and the following wording shall be stamped into the tag:

    "WARNING: 1/2 to 5 psi gas pressure - Do Not Remove"

42. The amendment of Section 2415.2 (404.2), entitled **CSST**, to add an Exception to read as follows:

    Exception: Corrugated stainless steel tubing (CSST) shall be a minimum of 1/2" (18 EDH).

43. The addition of Section 2415.7.4 (404.7.4), entitled **Additional protection of CSST piping,** to read as follows:

    2415.7.4 (404.7.4) Additional protection of CSST piping. Where Corrugated Stainless Steel Tubing (CSST) piping is installed in exterior wall cavities, insulated wall cavities and/or insulated roof/ceiling assemblies, the CSST piping must be protected for its entire length with flexible metal conduit (per the UL-1 Standard or its equivalent), Schedule 40 steel pipe, or approved strike plates. The additional protection must extend a minimum of 18 inches (457.2 mm) beyond where the CSST piping exits the wall cavities and/or the roof/ceiling assemblies.

44. The addition of Section 2415.12 (404.12), entitled **Minimum burial depth**, to read as follows:

    2415.12 (404.12) Minimum burial depth. Underground piping systems shall be installed a minimum depth of 18 inches (457 mm) below grade, except as provided for in Section 2415.12.1.

45. The deletion of Section 2415.12.1 (404.12.1), entitled **Individual outside appliances**, in its entirety.

46. The amendment of Section 2417.1 (406.1), entitled **General**, to read as follows:

2417.1 (406.1) General. Prior to acceptance and initial operation, all piping installations shall be inspected and pressure tested to determine that the materials, design, fabrication, and installation practices comply with the requirements of this code. The permit holder shall make the applicable tests prescribed in Sections 2417.1.1 through 2417.1.6 to determine compliance with the provisions of this code. The permit holder shall give reasonable advance notice to the building official when the piping system is ready for testing. The equipment, material, power and labor necessary for the inspections and test shall be furnished by the permit holder and the permit holder shall be responsible for determining that the work will withstand the test pressure prescribed in the following tests.

47. The amendment of Section 2417.4, entitled **Test pressure measurement**, to read as follows:

2417.4 (406.4) Test pressure measurement. Test pressure shall be measured with a monometer or with a pressure-measuring device designed and calibrated to read, record, or indicate a pressure loss caused by leakage during the pressure test period. The source of pressure shall be isolated before the pressure tests are made.

48. The amendment of Section 2417.4.1, entitled **Test pressure**, to read as follows:

2417.4.1 (406.4.1) Test pressure. The test pressure to be used shall be no less than 3-psig (20 kPa gauge), or at the discretion of the Code Official, the piping and valves may be tested at a pressure of at least six (6) inches (152 mm) of mercury, measured with a manometer or slope gauge, irrespective of design pressure. For tests requiring a pressure of 3-psig, diaphragm gauges shall utilize a dial with a minimum diameter of three and one-half inches (3 ½”), a set hand, 1/10 pound incrementation and pressure range not to exceed 6 psi for tests requiring a pressure of 3-psig. For tests requiring a pressure of 10-psig, diaphragm gauges shall utilize a dial with a minimum diameter of three and one-half inches (3 ½”), a set hand, a minimum of 2/10 pound incrementation and a pressure range not to exceed 20 psi. For welded piping, and for piping carrying gas at pressures in excess of fourteen (14) inches water column pressure (3.48 kPa) (1/2 psi) and less than 200 inches of water column pressure (52.2

kPa) (7.5 psi), the test pressure shall not be less than ten (10) pounds per square inch (69.6 kPa). For piping carrying gas at a pressure that exceeds 200 inches of water column (52.2 kPa) (7.5 psi), the test pressure shall be not less than one and one-half times the proposed maximum working pressure.

Diaphragm gauges used for testing must display a current calibration and be in good working condition. The appropriate test must be applied to the diaphragm gauge used for testing

49. The amendment of Section 2417.4.2, entitled **Test duration**, to read as follows:

2417.4.2 (406.4.2) Test duration. The test duration shall be held for a length of time satisfactory to the Building Official, but in no case be not for less than fifteen (15) minutes. For welded piping, and for piping carrying gas at pressures in excess of fourteen (14) inches water column pressure (3.48 kPa), the test duration shall be held for a length of time satisfactory to the Building Official, but in no case for less than thirty (30) minutes.

50. The amendment of Section 2420.1 (406.1), entitled **General**, by adding a new Section 2420.1.4 to read as follows:

2420.1.4 Valves in CSST installations. Shutoff valves installed with corrugated stainless steel (CSST) piping systems shall be supported with an approved termination fitting, or equivalent support, suitable for the size of the valves, of adequate strength and quality, and located at intervals so as to prevent or damp out excessive vibration but in no case greater than 12-inches from the center of the *valve*. Supports shall be installed so as not to interfere with the free expansion and contraction of the system's piping, fittings, and valves between anchors. All valves and supports shall be designed and installed so they will not be disengaged by movement of the supporting piping.

51. The amendment of Section 2420.5.1 (409.5.1), entitled **Located within the same room,** to read as follows:

2420.5.1 (409.5.1) Located within the same room. The shutoff valve shall be located in the same room as the appliance. The shutoff valve shall be within 6 feet (1829 mm) of the appliance, and shall be installed

upstream of the union, connector or quick connect device it serves. Such shutoff valves shall be provided with access. Appliance shutoff valves located in the firebox of a fireplace shall be installed in accordance with the appliance manufacturer's instructions. A secondary shutoff valve must be installed within 3 feet (914 mm) of the firebox if the appliance shutoff is located in the firebox.

52. The amendment of Section 2421.1 (410.1), entitled **Pressure regulators**, to add a second paragraph and an exception to read as follows:

Access to regulators shall comply with the requirements for access to appliances as specified in Section M1305.

Exception: A passageway or level service space is not required when the regulator is capable of being serviced and removed through the required attic opening.

53. The amendment of Section 2422.1.2.3 (411.1.3.3), by deleting Exception 1 and Exception 4.

54. The amendment of Section 2439.7.1 (614.8.1), entitled **Material and Size**, to add a sentence to read as follows:

The size of duct shall not be reduced along its developed length nor at the point of termination.

55. The deletion of Section 2439.7.4.2 (614.8.4.2), entitled **Manufacturer's instructions**, in its entirety.

56. The deletion of Section 2439.7.5 (614.8.5), entitled **Length identification**, in its entirety.

57. The amendment of Section 2439.7.6 (614.8.6), entitled **Exhaust duct required,** by deleting the Exception.

58. The amendment of Section 2445.2 (621.2), entitled **Prohibited use**, to add the following Exception to read as follows:

2445.2 (621.2) Prohibited use. One or more unvented room heaters shall not be used as the sole source of comfort heating in a dwelling unit.

Exception: Existing approved unvented room heaters may continue to be used in dwelling units, in accordance with the code provisions in effect when installed, when approved by the Building Official, unless an unsafe condition is determined to exist as described in Section 108.7 of the *International Fuel Gas Code*.

59. The amendment of Section 2448.1.1 (624.1.1), entitled **Installation requirements,** to read as follows:

2448.1.1 (624.1.1) Installation requirements. The requirements for water heaters relative to access, sizing, relief valves, drain pans and scald protection shall be in accordance with this code.

60. The amendment of Section 2503.8.2, entitled **Testing**, to read as follows:

2503.8.2 Testing. Reduced pressure principle backflow preventers, double check valve assemblies, double-detector check valve assemblies and pressure vacuum breaker assembles shall be tested at the time of installation, immediately after repairs or relocation at regular intervals as required by applicable state or local provisions.

61. The amendment of Section 2603.5.1, entitled **Sewer depth**, to read as follows:

2603.5.1 Sewer depth. Building sewers that connect to private sewage disposal systems shall be not less than 12 inches below finished grade at the point of septic tank connection. Building sewers shall be not less than 12 inches below grade.

62. The amendment of Section 2801.6.1, entitled **Pan size and drain,** to read as follows:

2801.6.1 Pan size and drain. The pan shall be not less than 11/2 inches (38 mm) in depth and shall be of sufficient size and shape to receive all dripping or condensate from the tank or water heater. The pan shall be drained by an indirect waste pipe having a diameter of not less than 3/4 inch (19 mm). Piping for safety pan drains shall be of those materials listed in Table 605.4. Multiple pan drains may terminate to a single discharge piping system when approved by the administrative authority and permitted by the manufacturer's installation instructions and installed with those instructions.

63. The amendment of Section 2801.7, entitled **Water heaters installed in garages**, to add Exceptions to read as follows:

Exceptions:

1. Elevation of the ignition source is not required for appliances that are listed as flammable vapor ignition-resistant.

2. Electric water heaters.

64. The amendment of Section 2804.6.1, entitled **Requirements for discharge piping**, to amend the first sentence and items 1 through 5 to read as follows:

2804.6.1 Requirements for discharge piping. The discharge piping serving a pressure relief valve, temperature relief valve or combination thereof shall:

1. Not be directly connected to the drainage system.

2. Discharge through an air gap.

3. Not be smaller than the diameter of the outlet of the valve served and shall discharge full size to the air gap.

4. Serve a single relief device and shall not connect to piping serving any other relief device or equipment.

   Exception: Multiple relief devices may be installed to a single T & P discharge piping system when approved by the administrative authority and permitted by the manufacturer's installation instructions and installed with those instructions.

5. Discharge to an indirect waste receptor or to the outdoors.

[remainder unchanged]

65. The amendment of Section 2902.5.3, entitled **Lawn irrigation systems**, to read as follows:

2902.5.3 Lawn irrigation systems. The potable water supply system to lawn irrigation systems shall be protected as provided for in the Irrigation Chapter.

66. The amendment of Section 2906.2, entitled **Lead content**, to read as follows:

2906.2 Lead content. Pipe and fittings used in the water-supply system shall have a maximum of less than 0.25% lead in accordance with NSF 372.

66.5. The addition of new Section 2906.6.1, entitled **Push type fittings**, to read as follows:

2906.6.1 Push type fittings. Push type fittings are prohibited for direct burial unless listed for such use.

67. The amendment of Section 3003.9.2, entitled **Solvent cementing**, by deleting the Exception.

68. The deletion of Section 3111, entitled **COMBINATION WASTE AND VENT**, in its entirety.

69. The amendment of Section 3112.2, entitled **Installation**, to read as follows:

3112.2 Installation. Traps for island sinks and similar equipment shall be roughed in above the floor and may be vented by extending the vent as high as possible, but not less than the drainboard height and then returning it downward and connecting it to the horizontal sink drain immediately downstream from the vertical fixture drain. The return vent shall be connected to the horizontal drain through a wye-branch fitting and shall, in addition, be provided with a foot vent taken off the vertical fixture vent by means of a wye-branch immediately below the floor and extending to the nearest partition and then through the roof to the open air or may be connected to other vents at a point not less than six (6) inches (152 mm) above the flood level rim of the fixtures served. Drainage fittings shall be used on all parts of the vent below the floor level and a minimum slope of one-quarter (1/4) inch per foot (20.9 mm/m) back to the drain shall be maintained. The return bend used under the drain-board shall be a one (1) piece fitting or an assembly of a forty-five (45) degree (0.79 radius), a

ninety (90) degree (1.6 radius) and a forty-five (45) degree (0.79 radius) elbow in the order named. Pipe sizing shall be as elsewhere required in this Code. The island sink drain, upstream of the return vent, shall serve no other fixtures. An accessible cleanout shall be installed in the vertical portion of the foot vent.

70. The deletion of Section 3112.3, entitled **Vent installation below the fixture flood level rim**, in its entirety.

71. The amendment of Appendix Q, entitled **RESERVED**, to read as follows:

APPENDIX Q
SWIMMING POOLS, SPAS AND HOT TUBS

SECTION Q101
GENERAL

Q101.1 General. The provisions of this appendix shall control the design and construction of swimming pools, spas and hot tubs installed in or on the lot of a one- and two-family dwelling.

SECTION Q102
PERMITS AND INSPECTIONS

Q 102.1 Permit Required. A permit shall be required to construct and/or erect a swimming pool. A permit may only be issued to a registrant as set out in Article IV of the Construction Chapter.

Q 102.2 Submittal required. An application for a permit to construct and/or erect a swimming pool shall be accompanied by the following:

1. Two (2) site plans indicating the location of the proposed swimming pool and the associated swimming pool decks on the lot that have been stamped by the electrical service provider,
2. Lot grading plans, including surface drain inlets and discharges, for both before and after construction,
3. The plans for pool barrier compliance, and
4. Any additional information that may be required by the Building Official.

Q 102.3 Inspection required. After an application for a permit to construct and/or erect a swimming pool has been issued in accordance with Article IV of the Construction Chapter, the following inspections are required as a minimum as applicable:

1. Belly steel inspection,
2. Electrical bonding inspection,
2.1. Pool entrapment protection system,
3. Underground electrical inspection,
4. Underground plumbing and gas piping inspection, and
5. Final inspection to include verification of swimming pool barrier compliance (prior to plastering the swimming pool).

Q 102.4 Lot grading and surface drainage. The construction and/or erection of a swimming pool may not alter the lot grading or drainage patterns intended by the lot's approved grading plan and/or the subdivision's approved grading and drainage plans. The point of discharge of collected surface drains and rain gutters may not exit onto adjacent properties as a concentrated point of discharge.

Q 102.5 It shall be unlawful for the registrant to permit or cause the swimming pool to be filled with water before the existence of a lawful swimming pool barrier is inspected and approved.

SECTION Q 103
DEFINITIONS

Q 103.1 General. For the purposes of these requirements, the terms used shall be defined as follows and as set forth in Chapter 2.

ABOVE-GROUND/ON-GROUND POOL. See "Swimming pool."

BARRIER. A fence, wall, building wall or combination thereof which completely surrounds the swimming pool and obstructs access to the swimming pool.

HOT TUB. See "Swimming pool."

IN-GROUND POOL. See "Swimming pool."

POOL DECK. A flat walking surface consisting of wood, stone, brick, concrete or other similar material located within 5 feet (1524 mm) of the water's edge of a swimming pool.

RESIDENTIAL. That which is situated on the premises of a detached one- or two-family dwelling or a one-family townhouse not more than three stories in height.

SELF-CLOSING GATE. A gate which closes or shuts automatically without the aid of human, electrical, solar or battery power after being opened.

SELF-CLOSING AND SELF-LATCHING DEVICE. A device that causes a gate to automatically close and latch without human, electrical, solar or battery power.

SPA, NONPORTABLE. See "Swimming pool."

SPA, PORTABLE. A nonpermanent structure intended for recreational bathing, in which all controls, water-heating and water-circulating equipment are an integral part of the product.

SWIMMING POOL. Any structure intended for swimming or recreational bathing that contains water over 24 inches (610 mm) deep. This includes in-ground, above-ground and on-ground swimming pools, hot tubs and spas.

SWIMMING POOL, INDOOR. A swimming pool which is totally contained within a structure and surrounded on all four sides by walls of said structure.

SWIMMING POOL, OUTDOOR. Any swimming pool which is not an indoor pool.

SECTION Q 104
SWIMMING POOLS

Q 104.1 In-ground pools. In-ground pools shall be designed and constructed in conformance with ANSI/NSPI-5 as listed in Section Q108.

Q 104.2 Above-ground and on-ground pools. Above-ground and on-ground pools shall be designed and constructed in conformance with ANSI/NSPI-4 as listed in Section Q108.

SECTION Q 105
SPAS AND HOT TUBS

Q 105.1 Permanently installed spas and hot tubs. Permanently installed spas and hot tubs shall be designed and constructed in conformance with ANSI/NSPI-3 as listed in Section Q 108.

Q 105.2 Portable spas and hot tubs. Portable spas and hot tubs shall be designed and constructed in conformance with ANSI/NSPI-6 as listed in Section Q108.

SECTION Q 106
BARRIER REQUIREMENTS

Q 106.1 Application. The provisions of this chapter shall control the design of barriers for residential swimming pools, spas and hot tubs. These design controls are intended to provide protection against potential drownings and near-drownings by restricting access to swimming pools, spas and hot tubs.

Q 106.2 Outdoor swimming pool. An outdoor swimming pool, including an in-ground, above-ground or on-ground pool, hot tub or spa shall be provided with a barrier which shall comply with the following:

1. The top of the barrier shall be at least 48 inches (1219 mm) above grade measured on the side of the barrier which faces away from the swimming pool. The maximum vertical clearance between grade and the bottom of the barrier shall be 2 inches (51 mm) measured on the side of the barrier which faces away from the swimming pool. Where the top of the pool structure is above grade, such as an above-ground pool, the barrier may be at ground level, such as the pool structure, or mounted on top of the pool structure. Where the barrier is mounted on top of the pool structure, the maximum vertical clearance between the top of the pool structure and the bottom of the barrier shall be 4 inches (102 mm).

2. Openings in the barrier shall not allow passage of a 4-inch-diameter (102 mm) sphere.

3. Solid barriers which do not have openings, such as a masonry or stone wall, shall not contain indentations or protrusions except for normal construction tolerances and tooled masonry joints.

4. Where the barrier is composed of horizontal and vertical members and the distance between the tops of the horizontal members is less than 45 inches (1143 mm), the horizontal members shall be located on the swimming pool side of the fence. Spacing between vertical members shall not exceed 1.75 inches (44 mm) in width. Where there are decorative cutouts within vertical members, spacing within the cutouts shall not exceed 1.75 inches (44 mm) in width.

   Exception: When the horizontal members are part of a fence that is at least 6 feet (1829 mm) in height, the horizontal members need not be on the pool side of the barrier.

5. Where the barrier is composed of horizontal and vertical members and the distance between the tops of the horizontal members is 45 inches (1143 mm) or more, spacing between vertical members shall not exceed 4 inches (102 mm). Where there are decorative cutouts within vertical members, spacing within the cutouts shall not exceed 1.75 inches (44 mm) in width.

6. Maximum mesh size for chain link fences shall be a 1.25-inch (32 mm) square unless the fence is provided with slats fastened at the top or the bottom which reduce the openings to not more than 1.75 inches (44 mm).

7. Where the barrier is composed of diagonal members, such as a lattice fence, the maximum opening formed by the diagonal members shall not be more than 1.75 inches (44 mm).

8. Access gates shall comply with the requirements of Section Q 106.2, Items 1 through 7, and shall be equipped to accommodate a locking device. Pedestrian access gates shall open outward away from the pool and shall be self-closing and have a self-latching device. Gates other than pedestrian access gates shall have a self-latching device. Where the release mechanism of the self-latching

device is located less than 54 inches (1372 mm) from the bottom of the gate, the release mechanism and openings shall comply with the following:

8.1. The release mechanism shall be located on the pool side of the gate at least 3 inches (76 mm) below the top of the gate, and

8.2. The gate and barrier shall have no opening greater than 0.5 inch (12.7 mm) within 18 inches (457 mm) of the release mechanism.

8.3. Driveway access gates across a paved or improved surface intended for regular vehicle access shall not be located in a swimming pool barrier.

9. Where a wall of a dwelling serves as part of the barrier one of the following conditions shall be met:

9.1. All doors with direct access to the pool through that wall shall be equipped with an alarm which produces an audible warning when the door and its screen, if present, are opened. The alarm shall sound continuously for a minimum of 30 seconds immediately after the door is opened and be capable of being heard throughout the house during normal household activities. The alarm shall automatically reset under all conditions. The alarm system shall be equipped with a manual means, such as touchpad or switch, to temporarily deactivate the alarm for a single opening. Such deactivation shall last for not more than 15 seconds. The deactivation switch(es) shall be located at least 54 inches (1372 mm) above the threshold of the door; or

9.2. Other means of protection, such as self-closing doors with self-latching devices, which are approved by the governing body, shall be acceptable so long as the degree of protection afforded is not less than the protection afforded by Item 9.1 described above.

10. Where an above-ground pool structure is used as a barrier or where the barrier is mounted on top of the pool structure and the means of access is a ladder or steps, then:

    10.1. The ladder or steps shall be capable of being secured, locked or removed to prevent access, or

    10.2. The ladder or steps shall be surrounded by a barrier which meets the requirements of Section Q 106.2, Items 1 through 9. When the ladder or steps are secured, locked or removed, any opening created shall not allow the passage of a 4-inch-diameter (102 mm) sphere.

Q 106.3 Indoor swimming pool. All walls surrounding an indoor swimming pool shall comply with Section Q 106.2, Item 9.

Q 106.4 Prohibited locations. Barriers shall be located so as to prohibit permanent structures, equipment or similar objects from being used to climb the barriers.

Q 106.5 Barrier exceptions. Spas or hot tubs with a safety cover which complies with ASTM F 1346, as listed in Section Q 108, shall be exempt from the provisions of this appendix.

SECTION Q 107
ENTRAPMENT PROTECTION FOR SWIMMING POOL AND SPA SUCTION OUTLETS

Q 107.1 General. Suction outlets shall be designed and installed in accordance with ANSI/APSP-7.

SECTION Q 108
ABBREVIATIONS

Q 108.1 General

ANSI-American National Standards Institute, 11 West 42nd Street, New York, NY 10036

ASTM-American Society for Testing and Materials, 1916 Race Street, Philadelphia, PA 19103

NSPI-National Spa and Pool Institute, 2111 Eisenhower Avenue, Alexandria, VA 22314

SECTION Q 109
STANDARDS

Q 109.1 General

ANSI/NSPI

ANSI/NSPI-3
Standard for Permanently Installed Residential Spas .....Q 105.1

ANSI/NSPI-4 Standard for Above-ground/On-ground Residential Swimming Pools. .....Q 104.2

ANSI/NSPI-5
Standard for Residential In-ground Swimming Pools. .....Q 104.1

ANSI/NSPI-6 Standard for Residential Portable Spas.....Q l05.2

ASME/ANSI
112.19.8-2007 Suction Fittings for Use in Swimming Pools, Wading Pools, Spas, Hot Tubs and Whirlpool Bathing Appliances .....Q 107.1

ANSI/APSP-7-06
Standard for Suction Entrapment Avoidance in Swimming Pools, Wading Pools, Spas, Hot Tubs and Catch Basins .....Q 107.1

ASTM

ASTM F 1346-91 Standard Performance Specifications for Safety Covers and Labeling Requirements for All Covers for Swimming Pools, Spas and Hot Tubs. .....Q 105.2, Q 105.5

E. The amendment of the following I.E.C.C. provisions:

1. The amendment of Section 101.1, entitled **Title**, to read as follows:

101.1 Title. This code shall be known as the International Energy Conservation Code of the City of Arlington, Texas, and shall be cited as such. It is referred to herein as "this code."

2. The amendment of Section 101.4, entitled **Applicability**, to read as follows:

101.4.2 Historic buildings. Any building or structure that is listed in the State of National Register of Historic Places; designated as a historic property under local or state designation law or survey; certified as a contributing resource with a National Register listed or locally designated historic district; or with an opinion or certification that the property is eligible to be listed on the National or State Registers of Historic places either individually or as a contributing building to a historic district by the State Historic Preservation Officer or the Keeper of the National Register of Historic Places, shall comply with all of the provisions of this code.

Exception: Whenever a provision or provisions shall invalidate or jeopardize the historical designation or listing, that provision or provisions may be exempted.

3. The amendment of Section 102.1, entitled **General**, to add a new Section 102.1.2 to read as follows:

102.1.2 Alternative compliance. A building certified by a national, state, or local accredited energy efficiency program and determined by the Energy Systems Laboratory to be in compliance with the energy efficiency requirements of this section may, at the option of the Code Official, be considered in compliance. The United States Environmental Protection Agency's Energy Star Program certification of energy code equivalency shall be considered in compliance.

4. The amendment of Section 202, entitled **GENERAL DEFINITIONS**, to add the following definition:

PROJECTION FACTOR. The ratio of the horizontal depth of the overhang, eave or permanently attached shading device, divided by the distance measured vertically from the bottom of the fenestration glazing to the underside of the overhang, eave or permanently attached shading device.

5. The amendment of Section 402.2, entitled **Specific building thermal envelope insulation requirements (Prescriptive)**, to add a new Section 402.2.7 to read as follows:

   Section 402.2.7 Insulation installed in walls. To insure that insulation remains in place, insulation installed in walls shall be totally enclosed on all sides consisting of framing lumber, gypsum, sheathing, wood structural panel sheathing, netting or other equivalent material approved by the building official.

6. The amendment of Section 102.1, entitled **General**, to add a new Section 102.1.2 to read as follows:

   102.1.2 Alternative compliance. A building certified by a national, state, or local accredited energy efficiency program and determined by the Energy Systems Laboratory to be in compliance with the energy efficiency requirements of this section may, at the option of the Code Official, be considered in compliance. The United States Environmental Protection Agency's Energy Star Program certification of energy code equivalency shall be considered in compliance. Regardless of the program or the path to compliance, each 1- and 2-family dwelling shall be tested for air and duct leakage as prescribed in Section 402.4 and 403.3.3 respectively.

7. The amendment of Section 202, entitled **GENERAL DEFINITIONS**, to add the following definition:

   DYNAMIC GLAZING. Any fenestration product that has the fully reversible ability to change its performance properties, including *U*-factor, solar heat gain coefficient (SHGC), or visible transmittance (VT).

8. The amendment of Section 402.2, entitled **Specific insulation requirements (Prescriptive)**, to add a new Section 402.2.14 to read as follows:

   Section 402.2.14 Insulation installed in walls. To insure that insulation remains in place, insulation installed in walls shall be totally enclosed on all sides consisting of framing lumber, gypsum, sheathing, wood structural panel sheathing, netting or other equivalent material approved by the building official.

9. The amendment of Section 402.3.2, entitled **Glazed fenestration SHGC**, by adding a paragraph and table following the Exception to read as follows:

Where vertical fenestration is shaded by an overhang, eave, or permanently attached shading device, the SHGC required in Table 402.1.2 shall be reduced by using the multipliers in Table 402.3.2 SHGC Multipliers for Permanent Projections.

Table 402.3.2 SHGC Multipliers for Permanent Projections [a]

Projection Factor	SHGC Multiplier (all Other Orientation)	SHGC Multiplier (North Oriented)
0 - 0.10	1.00	1.00
>0.10 – 0.20	0.91	0.95
>0.20 – 0.30	0.82	0.91
>0.30 – 0.40	0.74	0.87
>0.40 – 0.50	0.67	0.84
>0.50 – 0.60	0.61	0.81
>0.60 – 0.70	0.56	0.78
>0.70 – 0.80	0.51	0.76
>0.80 – 0.90	0.47	0.75
>0.90 – 1.00	0.44	0.73

[a] North oriented means within 45 degrees of true north.

10. The amendment of Section 402.4.1.2, entitled **Testing**, to add a last paragraph to read as follows:

Mandatory testing shall only be performed by individuals that are certified to perform air infiltration testing certified by national or state organizations as approved by the building official. The certified individuals must be an independent third-party entity, and may not be employed, or have any financial interest in the company that constructs the structure.

11. The amendment of Section 403.3.3, entitled **Duct Testing (Mandatory)**, to add a last paragraph to read as follows:

Mandatory testing shall only be performed by individuals that are certified to perform duct testing leakage testing certified by national or state

organizations as approved by the building official. The certified individuals must be an independent third-party entity, and may not be employed, or have any financial interest in the company that constructs the structure.

12. The amendment of Section 405.6.2, entitled **Specific approval,** to add the following sentence to the end of paragraph:

Acceptable performance software simulation tools may include, but are not limited to, REM Rate™, Energy Gauge and IC3. Other performance software programs accredited by RESNET BESTEST and having the ability to provide a report as outlined in 405.4.2 may also be deemed acceptable performance simulation programs and may be considered by the building official.

13. The amendment of TABLE 406.4, entitled **MAXIMUM ENERGY RATING INDEX**, to read as follows:

TABLE 406.4[1]
MAXIMUM ENERGY RATING INDEX

CLIMATE ZONE	ENERGY RATING INDEX
3	65

[1] This table is effective until August 31, 2019.

TABLE 406.4[2]
MAXIMUM ENERGY RATING INDEX

CLIMATE ZONE	ENERGY RATING INDEX
3	63

[2] The table is effective from September 1, 2019 to August 31, 2022.

TABLE 406.4[3]
MAXIMUM ENERGY RATING INDEX

CLIMATE ZONE	ENERGY RATING INDEX
3	59

[3] This table is effective on or after September 1, 2022

F. The amendment of the following I.E.B.C. provisions:

1. The amendment of Section 101.1, entitled **Title**, to read as follows:

101.1 Title. This code shall be known as the International Existing Building Code of the City of Arlington, Texas, and shall be cited as such. It is referred to herein as "this code."

2. The amendment of Section 101.4.2, **Historic buildings**, to read as follows:

101.4.2 Historic buildings. Any building or structure that is listed in the State of National Register of Historic Places; designated as a historic property under local or state designation law or survey; certified as a contributing resource with a National Register listed or locally designated historic district; or with an opinion or certification that the property is eligible to be listed on the National or State Registers of Historic places either individually or as a contributing building to a historic district by the State Historic Preservation Officer or the Keeper of the National Register of Historic Places, shall comply with all of the provisions of this code.

Exception: Whenever a provision or provisions shall invalidate or jeopardize the historical designation or listing, that provision or provisions may be exempted.

3. The amendment of Section 102.4, entitled **Referenced codes and standards,** to read as follows:

102.4 Referenced codes and standards. The codes, when specifically adopted, and standards referenced in this code shall be considered part of the requirements of this code to the prescribed extent of each such reference and as further regulated in Sections 102.4.1 and 102.4.2.

4. The amendment of Section 202, entitled **GENERAL DEFINITIONS**, to amend the definition of **EXISTING BUILDING** as follows:

EXISTING BUILDING. A building, structure, or space, with an approved final inspection issued under a code edition which is at least 2 published code editions preceding the currently adopted building code; or a change of occupancy.

5. The amendment of Section 405.1.2, entitled **Existing fire escapes**, to read as follows:

   405.1.2 Existing fire escapes. Existing fire escapes shall continue to be accepted as a component in the means of egress in existing buildings only. Existing fire escapes shall be permitted to be repaired or replaced.

6. The deletion of Section 405.1.3, entitled **New fire escapes**, in its entirety.

7. The amendment of Section 406.2, entitled **Replacement window opening control devices**, by amending the paragraph following Items 1-5 to read as follows:

   The window opening control device, after operation to release the control device allowing the window to fully open, shall not reduce the minimum net clear opening area of the window unit to less than the area required by Section 1030.2 of the International Building Code.

8. The amendment of Section 406.3, entitled **Replacement window emergency escape and rescue openings**, by amending the first paragraph to read as follows:

   406.2 Replacement window emergency escape and rescue openings. Where windows are required to provide emergency escape and rescue openings in Group R-2 and R-3 occupancies, replacement windows shall be exempt from the requirements of Sections 1030.2, 1030.3 and 1030.5 of the International Building Code provided the replacement window meets the following conditions:

   {Remainder unchanged}

9. The amendment of Section 408.3, entitled **Flood hazard areas,** to read as follows:

   408.3 Flood hazard areas. To establish flood hazard areas, the applicable governing authority shall adopt a flood hazard map and supporting data. The flood hazard map shall include, at a minimum, areas of special flood hazard as identified by the Federal Emergency Management Agency in an engineering report entitled "The Flood Insurance Study for Tarrant County, Texas," dated September 25, 2009, as amended or revised with the accompanying Flood Insurance Rate Map (FIRM) and Flood Boundary

and Floodway Map (FBFM) and related supporting data along with any revisions thereto. The adopted flood hazard map and supporting data are hereby adopted by reference and declared to be part of this section.

10. The amendment of Section 409.1, entitled **Conformance**, to add an exception to read as follows:

    Exception: Moved historic buildings need not be brought into compliance with the exception of new construction features required as the result of such movement, including but not limited to foundations and/or other structural elements.

11. The amendment of Section 410.1, entitled **Scope**, to add an Exception to read as follows:

    Exception: Components of projects regulated by and registered with Architectural Barriers Division of Texas Department of Licensing and Regulation shall be deemed to be in compliance with the requirements of this chapter.

12. The amendment of Section 410.4.2, entitled **Complete change of occupancy**, to add Number 7 to the list of requirements as follows:

    7. At least one accessible family or assisted use toilet room shall be provided in accordance with Chapter 11 of the International Building Code.

13. The amendment of Section 601.3, entitled **Flood hazard areas**, to read as follows:

    601.3 Flood hazard areas. To establish flood hazard areas, the applicable governing authority shall adopt a flood hazard map and supporting data. The flood hazard map shall include, at a minimum, areas of special flood hazard as identified by the Federal Emergency Management Agency in an engineering report entitled "The Flood Insurance Study for Tarrant County, Texas," dated September 25, 2009, as amended or revised with the accompanying Flood Insurance Rate Map (FIRM) and Flood Boundary and Floodway Map (FBFM) and related supporting data along with any revisions thereto. The adopted flood hazard map and supporting data are hereby adopted by reference and declared to be part of this section.

14. The amendment of Section 602.3, entitled **Glazing in hazardous locations**, to read as follows:

    602.3 Glazing in hazardous locations. Replacement glazing in hazardous locations shall comply with the safety glazing requirements of the *International Building Code*, *International Energy Conservation Code*, or *International Residential Code* as applicable.

15. The amendment of Section 606.2.4, entitled **Flood hazard areas**, to read as follows:

    606.2.4 Flood hazard areas. To establish flood hazard areas, the applicable governing authority shall adopt a flood hazard map and supporting data. The flood hazard map shall include, at a minimum, areas of special flood hazard as identified by the Federal Emergency Management Agency in an engineering report entitled "The Flood Insurance Study for Tarrant County, Texas," dated September 25, 2009, as amended or revised with the accompanying Flood Insurance Rate Map (FIRM) and Flood Boundary and Floodway Map (FBFM) and related supporting data along with any revisions thereto. The adopted flood hazard map and supporting data are hereby adopted by reference and declared to be part of this section.

16. The amendment of Section 607.1, entitled **Material**, to read as follows:

    607.1 Material. Existing electrical wiring and equipment undergoing *repair* shall be allowed to be repaired or replaced with like material, in accordance with the requirements of NFPA 70.

17. The amendment of Section 701.3, entitled **Flood hazard areas**, to read as follows:

    701.3 Flood Hazard areas. To establish flood hazard areas, the applicable governing authority shall adopt a flood hazard map and supporting data. The flood hazard map shall include, at a minimum, areas of special flood hazard as identified by the Federal Emergency Management Agency in an engineering report entitled "The Flood Insurance Study for Tarrant County, Texas," dated September 25, 2009, as amended or revised with the accompanying Flood Insurance Rate Map (FIRM) and Flood Boundary and Floodway Map (FBFM) and related

supporting data along with any revisions thereto. The adopted flood hazard map and supporting data are hereby adopted by reference and declared to be part of this section.

18. The amendment of Section 702.6, entitled **Materials and methods**, to read as follows:

702.6 Materials and methods. All new work shall comply with the materials and methods requirements in the *International Building Code*, *International Energy Conservation Code*, *International Mechanical Code*, *National Electrical Code*, and *International Plumbing Code*, as applicable, that specify material standards, detail of installation and connection, joints, penetrations, and continuity of any element, component, or system in the building.

19. The amendment of Section 802.1, entitled **General**, to read as follows:

802.1 General. Alteration of buildings classified as special use and occupancy as described in Chapter 4 of_the *International Building Code* shall comply with the requirements of Section 801.1 and the scoping provisions of Chapter 1, where applicable.

20. The amendment of Section 803.5.1, entitled **Minimum requirement**, to read as follows:

803.5.1 Minimum requirement. Every portion of open-sided walking surfaces, including mezzanines, equipment platforms, aisles, stairs, ramps and landings that are not provided with guards, or those in which the existing guards are judged to be in danger of collapsing, shall be provided with guards.

21. The amendment of Section 804.1, entitled **Scope**, to add a sentence to read as follows:

For the purpose of fire sprinkler protection and fire alarm requirements included in this section, the work area shall be extended to include at least the entire tenant space or spaces bounded by walls capable of resisting the passage of smoke containing the subject work area, and if the work area includes a corridor, hallway, or other exit access, then such corridor, hallway, or other exit access shall be protected in its entirety on that particular floor level.

22. The amendment of Section 804.2.2, entitled **Groups A, B, E, F-1, H, I, M, R-1, R-2, R-4, S-1, and S-2**, to change the Exception under Item 2 to read as follows:

    Exception: Where the building does not have sufficient municipal water supply for design of a fire sprinkler system available to the floor without installation of a new fire pump, fire sprinkler protection shall not be required.

23. The amendment of Section 804.2.5, entitled **Supervision**, to change the Exception to read as follows:

    Exception: Supervision is not required where the Fire Code does not require such for new construction.

24. The amendment of Section 804.3, entitled **Standpipes**, to read as follows:

    804.3 Standpipes. Refer to Section 1103.6 of the Fire Code for retroactive standpipe requirements.

    {The remainder of Section 804.3 is deleted in its entirety.}

25. The amendment of Section 805.2, entitled **General**, by deleting Exception 1.

26. The amendment of Section 805.3.1.1, entitled **Single-exit buildings**, by deleting Item 4.

27. The amendment of Section 805.3.1.2, entitled **Fire escapes required**, to read as follows:

    805.3.1.2 Fire Escapes required. For other than Group I-2, where more than one exit is required, an existing fire escape complying with section 805.3.1.2.1 shall be accepted as providing one of the required means of egress.

28. The amendment of Section 805.3.1.2.1, entitled **Fire escape access and details**, by deleting the word "new" from Item 2, deleting Item 3 in its entirety, and amending Item 5 to read as follows:

5. In all buildings of Group E occupancy up to and including the 12th grade, buildings of Group I occupancy, boarding houses, and childcare centers, ladders of any type are prohibited on fire escapes used as a required means of egress.

29. The deletion of Section 805.3.1.2.2, entitled **Construction,** in its entirety.

30. The deletion of Section 805.3.1.2.3, entitled **Dimensions**, in its entirety**.**

31. The amendment of Section 806.2, entitled **Stairways and escalators in existing buildings**, to add an exception to read as follows:

    Exception: Components of projects regulated by and registered with Architectural Barriers Division of Texas Department of Licensing and Regulation shall be deemed to be in compliance with the requirements of this chapter.

32. The amendment of Section 904.1, entitled **Automatic sprinkler systems**, to add a sentence to read as follows:

    For the purpose of fire sprinkler protection and fire alarm requirements included in this section, the work area shall be extended to include at least the entire tenant space or spaces bounded by walls containing the subject work area, and if the work area includes a corridor, hallway, or other exit access, then such corridor, hallway, or other exit access shall be protected in its entirety on that particular floor level.

33. The amendment of Section 904.1.1, entitled **High-rise buildings**, to read as follows:

    904.1.1 High-rise buildings. An automatic sprinkler system shall be provided in work areas of where the high-rise buildings.

34. The amendment of Section 1103.5, entitled **Flood hazard areas**, to read as follows:

    1103.5 Flood hazard areas. To establish flood hazard areas, the applicable governing authority shall adopt a flood hazard map and supporting data. The flood hazard map shall include, at a minimum, areas

of special flood hazard as identified by the Federal Emergency Management Agency in an engineering report entitled "The Flood Insurance Study for Tarrant County, Texas," dated September 25, 2009, as amended or revised with the accompanying Flood Insurance Rate Map (FIRM) and Flood Boundary and Floodway Map (FBFM) and related supporting data along with any revisions thereto. The adopted flood hazard map and supporting data are hereby adopted by reference and declared to be part of this section.

35. The amendment of Section 1201.4, entitled **Flood hazard areas,** to read as follows:

1201.4 Flood hazard areas. To establish flood hazard areas, the applicable governing authority shall adopt a flood hazard map and supporting data. The flood hazard map shall include, at a minimum, areas of special flood hazard as identified by the Federal Emergency Management Agency in an engineering report entitled "The Flood Insurance Study for Tarrant County, Texas," dated September 25, 2009, as amended or revised with the accompanying Flood Insurance Rate Map (FIRM) and Flood Boundary and Floodway Map (FBFM) and related supporting data along with any revisions thereto. The adopted flood hazard map and supporting data are hereby adopted by reference and declared to be part of this section.

36. The amendment of Section 1302.7, entitled **Flood hazard areas**, to read as follows:

1307.2 Flood hazard areas. To establish flood hazard areas, the applicable governing authority shall adopt a flood hazard map and supporting data. The flood hazard map shall include, at a minimum, areas of special flood hazard as identified by the Federal Emergency Management Agency in an engineering report entitled "The Flood Insurance Study for Tarrant County, Texas," dated September 25, 2009, as amended or revised with the accompanying Flood Insurance Rate Map (FIRM) and Flood Boundary and Floodway Map (FBFM) and related supporting data along with any revisions thereto. The adopted flood hazard map and supporting data are hereby adopted by reference and declared to be part of this section.

37. The amendment of Section 1401.2, entitled **Applicability**, by amending the first sentence thereof to read as follows:

1401.2 Applicability. Structures existing prior to the date of an approved final inspection issued under a code edition which is at least two published code editions preceding the currently adopted building code; or a change of occupancy shall be made to conform to the requirements of this chapter or the provisions of Chapters 5 through 13.

38. The amendment of Section 1401.3.2, entitled **Compliance with other codes,** to read as follows:

1401.3.2 Compliance with other codes. Buildings that are evaluated in accordance with this section shall comply with the *International Fire Code*.

39. The amendment of Chapter 16, entitled **REFERENCED STANDARDS**, to change IECC-15 to read as follows:

IECC Edition as adopted by the State of Texas
International Energy Conservation Code®. .301.2, 702.6, 708.1, 811.1, 908.1

Section 1.05 <u>Adoption of Appendices</u>

The following referenced provisions of the I.B.C., I.R.C., I.E.B.C. and I.E.C.C. annexed hereto as appendices, the same being either attached hereto or incorporated herein by reference, are made a part of this Building Code:

<u>Appendix A</u>. Only Appendix C, entitled GROUP U-AGRICULTURAL BUILDINGS, of the Appendix to the International Building Code, 2015 Edition.

All other Chapters of said Appendix to the I.B.C. are hereby omitted from this Building Code.

<u>Appendix B</u>. Only Appendix H, entitled PATIO COVERS, of the Appendix to the International Residential Code, 2015 Edition.

All other Appendices to the I.R.C., not specifically referenced or quoted herein are hereby omitted from this Building Code.

(Amend Ord 18-017, 4/10/18)

Section l.06 <u>Construction Prohibited in Easements</u>

A. Regardless of materials, manner of construction or unique characteristics of land, it shall be unlawful for any person, firm or corporation to cause or permit the installation, revision or relocation of any construction improvement where any part of such improvement is to be located in an easement, except as provided in this Section.

B. In cases where improvements are proposed in any public easement the City has a right to use, application shall be made to the Building Official for the execution of an Easement Use Agreement. The Building Official shall refer the request to the City Engineer. If the improvement is approved, an easement use agreement allowing the encroachment will be provided upon payment of an administrative fee in the amount set by City Council resolution. Certain minor improvements are permitted without an Easement Use Agreement as provided in the Design Criteria Manual adopted by the City. In cases where improvements are proposed in any other easement, written permission of the owner of the dominant estate, or the beneficiary of the easement, is required prior to construction.

C. The City of Arlington shall not be liable for damages or losses of any kind whatsoever by reason of injury to property or person occasioned by the use of any easement. The City shall have no obligations in regards to the maintenance of any improvements within such easement or rights-of-way. The City shall be defended at the cost and expense of the person placing improvements in any easements or rights-of-way from all claims and demands. The use of any easement in rights-of-way shall be discontinued and improvements removed within 30 days of notification by the City and the cost of the discontinuation and removal of improvements shall be borne by the owner of the improvement. The Building Official or the City Engineer may terminate and/or modify an Easement Use Agreement after review and concurrence of valid and justifiable reasons and/or conditions.

D. The term “improvement” includes, but is not limited to, concrete or asphalt paving, swimming pools, fences, retaining walls, and temporary or permanent buildings. “Improvements” shall not include public or private mailboxes, or poles and boxes necessary for public utility services, or City-owned improvements on City property.

The term “easement” shall include easements for right-of-way, drainage and utilities.

(Amend Ord 09-024, 5/5/09)

Section 1.07 <u>Requirements for Drainage</u>

A. No person, firm, or corporation shall do, cause or permit to be done, the installation, modification, or relocation of any construction improvement where the improvement, when completed, will significantly impact other property. The other property may be either upstream or downstream from the property on which the improvement is to be made. The impact is primarily related to flooding of a building structure. The Building Official shall not issue a building permit where engineering data from a qualified professional engineer or the opinion of the Department of Engineering Services reveals that such improvement would significantly worsen any known drainage or flooding problem.

B. The term "improvement" means any of those things which require a building permit, such as buildings (either permanent or temporary), land development, concrete or asphalt paving, swimming pools, fences, retaining walls, earth fill, or excavation and landscaping. "Improvement" shall not include poles or boxes necessary for public utility service.

C. Prior to obtaining a building permit, an acceptable site grading and drainage plan will be filed with the Building Inspections Department.

The purpose of the site grading plan is to ensure that all proposed structures are protected from a storm event having a 100-year recurrence interval. The plan shall assume a fully-developed watershed and shall account for all runoff that flows onto the site as well as runoff generated from the site.

See Design Criteria Manual for specific criteria regarding residential and commercial site grading plans.

Section 1.08 <u>Enforcement, Violations</u>

A. It shall be unlawful for any person, firm or corporation to erect, construct, enlarge, alter, repair, move, improve, remove, convert, demolish, equip, use, occupy or maintain any building, structure or premises in the City of Arlington, or cause or permit the same to be done, contrary to or in violation of any of the provisions of this Building Code.

B. In addition to the power of the Building Official under I.B.C., Section 104.6, entitled "Right of Entry," to inspect a building pursuant to this Building Code, any

peace officer may enter the public areas of any building or premises, or any areas specified in a proper inspection warrant, at all reasonable times wherever necessary in the performance of official duties to inspect and investigate for violations of any law, or to enforce any law, including violations of this Building Code. The peace officer shall first present proper credentials and request entry, unless otherwise permitted by law. If such entry is refused or, if no owner or other person having charge or control of the building or premises can be located, the peace officer shall have recourse to every remedy provided by law to secure entry. (Amend Ord 18-017, 4/10/18)

Section 1.09 <u>Skateboard Ramps</u>

A. As used in this Section, the phrase "skateboard ramp" shall refer to a structure or piece of work artificially built up or composed of parts joined together in some definite manner, regardless of the materials used or the manner of construction, which is primarily used for, or designed and intended for primary use as, a ramp for skating or skateboarding activities.

B. It shall be unlawful for any person to erect, construct, keep, maintain or use a skateboard ramp that is located:

(1) at a distance closer than one hundred fifty feet (150') from any building located on another's property that is used or intended to be used for habitation, regardless of whether the habitation existed prior to the erection of said skateboard ramp; or

(2) at a distance closer than fifty feet (50') from the property line of the lot where said skateboard ramp is located.

C. Should a habitation be placed on another's property closer than one hundred fifty feet (150') to an existing skateboard ramp, the owner of said skateboard ramp shall remove or relocate, or cause to be removed or relocated, said skateboard ramp within ninety (90) days of the completion of construction of the habitation.

D. Failure to remove or relocate, or cause to be removed or relocated, a skateboard ramp as required by this Section shall constitute a misdemeanor. Each day that a skateboard ramp remains in violation of this Section shall constitute a separate offense.

Section 1.10 <u>Presumption</u>

Unless otherwise specified in this Chapter, the owner, occupant or person in control of any building or premises where any violation of this Building Code is found shall be prima facie responsible for such violation. (Amend Ord 02-020, 2/5/02)

Section 1.11 <u>Trash Receptacles</u>

All development for which a building permit is issued shall provide a trash receptacle capable of depositing, containing, and collecting refuse. The container shall be constructed or provided to prohibit trash from blowing or being displaced. Trash bins may be of a commercial type designated by the City Collector. If constructed on site, the minimum dimensions shall be eight feet in both width and length by four feet in depth (8'x8'x4'). Enclosed construction trailers located on-site may satisfy this requirement. Permits and inspections may be withheld in situations where trash is not properly contained. (Amend Ord 02-024, 2/12/02)

Section 1.12 <u>Hours of Construction</u>

Outdoor construction activities for projects supervised by building permits shall be prohibited, if located within three hundred (300') feet of property used for residential purposes, during the following times:

(1) During the hours of 6:00 p.m. to 7:00 a.m. Central Standard Time.

(2) During the hours of 8:00 p.m. to 7:00 a.m. Central Daylight Savings Time.

EXCEPTION: Homeowners performing work when acting as their own contractor.

The prohibition of outdoor construction activities may be appealed in writing to the building official. The building official may take into consideration the proximity of the proposed outdoor construction activities with adjacent residential uses and grant an exception to the prohibition. The building official may require the appellant to submit such information as needed to assist in the determination of residential adjacency. The building official must reply to the appellant within five (5) days of receipt of the appeal. Decisions of the building official may be appealed to the Building Code Board of Appeals as outlined in the Construction Ordinance. (Amend Ord 02-024, 2/12/02)

Section 1.13 <u>Electronic Submittal of Final Plans</u>

Final plans or other documents required by the Building Code that will be archived must be submitted in an electronic format specified by the Director of Community Development and Planning ("CDP Director") as a condition to issuance of any type of permit, approval, or other action related to the final plans or documents. The City may provide an electronic conversion service for a fee in the amount set forth by City Council resolution. The CDP Director shall provide a schedule indicating which documents must be provided electronically, at which point during the approval process, and other information as necessary to implement an electronic archiving program. (Amend Ord 10-009, 1/12/10)

ARTICLE II

BUILDING CODE BOARD OF APPEALS

Section 2.01 Appointment

There is hereby established a Board to be called the Building Code Board of Appeals (hereinafter called "the Board"), which shall consist of nine (9) members who are residents of the City of Arlington. Such Board shall be composed of one (1) architect, one (1) general contractor or engineer, one (1) member with experience in the area of fire protection and fire safety, and the remaining members shall be selected at large from the building industry. The Mayor and each City Council member shall nominate a member with confirmation by majority vote of the City Council in accordance with the City of Arlington Boards and Commissions Policy Statement. (Amend Ord 04-042, 5/11/04)

Section 2.02 Term of Office

Place numbers shall be assigned to each member of the Board. The term of office for Board members shall be for two (2) years. Vacancies shall be filled for an unexpired term in the same manner as the original appointments. Continued absence of any member from regular meetings of the Board shall, at the discretion of the City Council, render any such member liable to immediate removal from office. Members shall serve at the will and pleasure of the City Council. (Amend Ord 04-042, 5/11/04)

Section 2.03 Quorum

Five (5) members of the Board shall constitute a quorum for the transaction of business. A simple majority of members present shall be required to vary the application of any provision of this Building Code or to modify any order of the Building Official. (Amend Ord 04-042, 5/11/04)

Section 2.04 Records

The Building Official shall act as Secretary of the Building Code Board of Appeals and shall make a detailed record of all its proceedings, which record shall set forth the names of the members and/or alternate member present, the reasons for the Board's decisions, the vote of each member participating therein, and any failure of a member to vote.

Section 2.05 Procedure

The Chairman shall be appointed in accordance with the Administration Chapter of the City Code. The Board shall select a vice-chairman and shall further establish rules and regulations for its own procedures not inconsistent with the provisions of this Building Code. The Board shall meet at regular intervals to be determined by the Chairman, and the Board shall meet within thirty (30) days after notice of any appeal has been received. (Amend Ord 96-93, 7/2/96)

Section 2.06 Appeals; Time Limit

A. The owner of premises who seeks to erect or alter a building or structure on said premises, or an authorized agent, may appeal from a decision of the Building Official to the Board if:

(1) The Building Official shall reject or refuse to approve the mode or manner of construction proposed to be followed, or the materials proposed to be used, in the erection or alteration of said building or structure; or

(2) Said owner claims that the provisions of this Building Code do not apply to the proposed construction; or

(3) Said owner claims that an equally good or more desirable form of construction or materials can be employed in the proposed construction than the Building Official requires; or

(4) Said owner claims that the true intent and meaning of this Building Code or of any of its regulations have been misconstrued or wrongly interpreted.

An administrative fee, as set by resolution of the Arlington City Council, shall accompany the notice of appeal which the owner or an authorized agent must file in writing with, and on a form provided by, said Building Official.

B. The notice of appeal shall be filed within thirty (30) days after the Building Official renders a decision: provided, however, that said Building Official may limit the time for appeal to a shorter period in cases involving buildings or structures that are, in the Building Official's opinion, unsafe or dangerous.

C. Initiating work, progressing with that portion of work which is the particular issue on appeal, or progressing with work which would cover the matter on appeal, shall void such appeal. (Amend Ord 96-93, 7/2/96)

Section 2.07 <u>Board Decisions; Variations and Modifications</u>

A. The Board, when appealed to, shall conduct a hearing and, after such hearing, may vary the application of any provision of this Building Code to any particular case when, in its opinion, the enforcement thereof would do manifest injustice and would be contrary to the spirit and purpose of said Building Code or the public interest, or when, in its opinion, the interpretation of the Building Official should be modified or reversed for any other reason.

B. A decision of the Board to vary the application of any provision of this Building Code or to modify an order of the Building Official shall specify in what manner such variation or modification is made, the conditions upon which it is made and the reasons therefor.

Section 2.08 <u>Board Decisions; Procedure</u>

A. Every decision of the Board shall be final: subject, however, to such remedy as any aggrieved party might have at law or in equity. The decision shall be in writing and shall indicate the vote upon the decision. Every decision shall be promptly filed in the office of the Building Official and shall be open to the public for inspection. A true and correct copy of the decision shall be sent by mail or otherwise to the

appellant and a copy shall be publicly posted in the office of the Building Official for two (2) weeks after the filing thereof.

B. The Board shall in every case reach a decision without unreasonable or unnecessary delay.

C. If a decision of the Board reverses or modifies any decision of the Building Official or varies the application of any provision of this Building Code, the Building Official shall immediately take action in accordance with such decision.

D. Any person, firm or corporation aggrieved by any decision of the Board may present to a court of record a petition, duly verified, setting forth that such decision is illegal in whole or in part, and specifying the grounds of the illegality. Unless such petition (appeal) shall be presented to the court within ten (10) days of the decision of the Board, the decision of the Board shall become final. (Amend Ord 89-76, 6/27/89)

Section 2.09 <u>Model Code Adoption or Amendment</u>

A. In this section, "national model code" means a publication that is developed, promulgated, and periodically updated at a national level by organizations consisting of industry and government fire and building safety officials through a legislative or consensus process and that is intended for consideration by units of government as local law. National model codes include the International Residential Code, the National Electrical Code, and the International Building Code.

B. The Board is established as an advisory board for the purpose of obtaining public comment on the proposed adoption of or amendment to a national model code, and providing a recommendation to City Council. On or before the 10th day before the date the Board conducts a public hearing to consider the adoption of or amendment to a national model code, the City shall publish notice of the proposed action and the date of the public hearing conspicuously on the City's Internet website.

C. Except as provided by Subsection (D), adoption of an ordinance or national model code provision that is intended to govern the construction, renovation, use, or maintenance of buildings and building systems in the City shall have a delayed effective date that will delay implementing and enforcing the ordinance or code provision for at least 30 days after final adoption of the ordinance, to permit persons affected to comply with the ordinance or code provision.

D. If a delay in implementing or enforcing the ordinance or code provision would cause imminent harm to the health or safety of the public, the City may enforce the ordinance or code provision immediately on the effective date of the ordinance or code provision. (Amend Ord 09-032, 6/23/09)

ARTICLE III

MOVED BUILDINGS

Section 3.01 Registration and Permits

A. Registration Required. No building or part of any building shall be moved through or across any sidewalk, street, alley or highway by any person who is not a registered building mover, as hereinafter provided, unless moved solely on a State highway. This registration for a building mover shall be issued by the Building Official after application has been submitted according to the provisions of this Article and after coordination and approval of said application by the Police, Transportation and other appropriate departments of the City of Arlington.

B. Permit Required. Subject to the exception contained in Subsection (C) below, no building or part of any building shall be moved through or across any sidewalk, street, alley or highway within the City of Arlington unless and until an Oversize and Overweight Vehicle Permit complying with the provisions of Article XIV of this Building Code below shall first have been obtained from the Building Official.

C. Exception: The provisions of this Article shall not apply to manufactured housing which is moved over the highways, roads and streets of the City of Arlington in accordance with permits issued by the State Department of Highways and Public Transportation. For the purposes of this Section, "manufactured housing" shall be as defined by the Texas Manufactured Housing Standards Act, V.A.C.S., Article 5221f.

Section 3.02 Application for Registration and Permits

A. Registration Information Required. An applicant for registration under this Article shall comply with requirements for registration as described in Article IV. (Amend Ord 97-90, 7/1/97)

B. Permit Information Required. Any registered building mover desiring a moving permit shall file with the Building Official a written application therefor not less than five (5) days prior to the proposed date of

removal, setting forth the following information in addition to the applicable requirements of Article IV of this Building Code below:

(1) The present location of the building to be moved and its proposed new location by lot, block, subdivision and street address;

(2) The date and approximate time such building will be upon the streets;

(3) The proposed route from the present to the new location; and

(4) Such other pertinent information as the Building Official may deem necessary.

Section 3.03 <u>Building Official Shall Reject</u>

A. If, in the opinion of the Building Official:

(1) The moving of any building will cause serious injury to persons or property, or serious injury to the streets or other public improvements;

(2) The building to be moved has deteriorated by more than fifty percent (50%) of its original condition for any reason; or

(3) The moving of the building will violate any of the requirements of this Building Code or the "Zoning" Chapter of the Code of the City of Arlington;

the permit shall not be issued and the building shall not be moved over the streets.

B. If, in the opinion of the Building Official, the moving of a building upon any lot in the City of Arlington will cause injury to persons or property or will depreciate the value of surrounding property, the permit shall not be issued. Any building moved onto a lot in said City shall immediately be brought up to the standard prevailing in an area within a six hundred foot (600') radius of the site onto which said building is moved.

Section 3.04 Prolonged Damage

A. Mover Liability. A registered building mover shall employ such procedures and equipment as will preclude undue wear or damage to streets, curbs, sidewalks, trees, highways or other public property caused by the operation of moving. Said mover shall also employ such procedures and equipment as will ensure timely travel within or through the City of Arlington without unnecessary interruption. Failure to:

(1) Complete the move within or through said City;

(2) Repair damage caused to streets or other public property; or

(3) Clear from the streets or other public property all debris related to the moving process within the time limits set forth in the permit;

shall constitute a separate offense by the building mover for each day such condition is allowed to exist after the expiration of the appropriate time limit.

B. Owner Liability: When a building is to be moved onto a property that is within the City of Arlington, the issuance of the moving permit shall be further conditioned on submittal of written confirmation by the owner of such property that the moved building shall, in not more than one hundred eighty (180) days from the date the building arrives at its destination, be brought to a habitable condition and be in compliance with this Building Code and other pertinent Chapters of the Code of said City. Failure to satisfy such a schedule shall be grounds for denying a Certificate of Occupancy and shall constitute a separate offense by the owner of the property for each day such condition continues.

Section 3.05 Public Safety Requirements

A registrant under this Article shall comply with the public safety requirements set forth in Section 6.03E.3 of the "Traffic" Chapter of the Code of the City of Arlington as a prerequisite condition to the issuance of a permit and while performing under said permit.

Section 3.06 <u>Other Permits</u>

Nothing contained herein shall be construed as relieving an applicant from duties elsewhere imposed by law, including, but not limited to, ordinances regulating truck routes and load limits and the obtaining of permits and payment of fees therefor, or other provisions of the Code of the City of Arlington.

Section 3.07 <u>Utility Relocations</u>

In the event the removal of a building requires the removal or adjustment, temporarily or otherwise, of any wire, line, pole or other impediment which is lawfully located on or over public property, the expense thereby incurred shall be borne solely by the person registered under Section 3.02(a) of this Article.

Further, all water, sewer and gas lines must be capped off within five feet (5') of the property line in accordance with the "Plumbing" Chapter of the Code of the City of Arlington.

Section 3.08 <u>Other Relocations</u>

All improvements other than those specified in Section 3.08 above on a lot from which a building has been moved must be removed, including the foundation, plumbing, accessory structures, etc., unless specific written authorization to leave said improvements is given to the mover by the Building Official or an authorized representative.

Section 3.09 <u>Inspections</u>

Once the structure has been removed, the building mover must call an inspection. Plumbing capped off shall remain uncovered in order to facilitate inspection. (Amend Ord 98-141, 10/27/98)

Section 3.10 <u>Other</u>

If a building is to be relocated within the corporate limits of the City of Arlington, a building permit must be submitted at the new address and approved prior to locating the structure at the new site. (Amend Ord 97-90, 7/1/97)

ARTICLE IV

REGISTRATION, PERMITS AND INSPECTIONS

Section 4.01 Registration

A. **Registration Required**. It shall be unlawful for any person, firm or corporation to erect, construct, enlarge, alter, repair, move, improve, remove, convert or demolish any building, sign or structure in the City of Arlington, or cause the same to be done, unless such person, firm or corporation is the holder of a valid registration with said City to perform such work. Such person, firm or corporation shall be herein termed Registrant. In extending the rights and privileges of such registration, said City makes no statement of the technical competency of those so registered, and no manner of license is proffered.

B. An applicant for registration under this article shall provide to the Building Official the following information:

1. The complete name, complete mailing address and telephone number of the firm or corporation;

2. The name and private mailing address of a principal of the firm or corporation who is a person authorized to bind the firm or corporation in legal agreements;

3. If the registration is to be as an individual only, the name, mailing address and telephone number of the individual; and

4. Other pertinent information deemed necessary by the Building Official.

Every Registrant shall contact the office of the Building Official to ensure the accurate revision of registration information, including any change of address or telephone number, within ten (10) days from the date that the previous information supplied in the application becomes invalid for any reason. Failure to revise inaccurate information, or providing false, misleading or inaccurate information when applying for registration, shall constitute an offense.

Every Registrant doing work in any City rights-of-way shall carry Contractor's Public Liability Insurance with a combined single limit of not less than Five Hundred Thousand and No/100 Dollars ($500,000.00) per occurrence, with an

aggregate of not less than Five Hundred Thousand and No/100 Dollars ($500,000.00). The Registrant shall make the City of Arlington a Certificate Holder and present proof of insurance at the time of registration and all subsequent renewals. Notice of policy cancellations or failure to renew coverage shall be cause for revocation of registration, denial of inspections or cancellation of permits. (Amend Ord 98-141, 10/27/98)

C. **Building Official Shall Respond**. After application for registration has been received, the Building Official shall act promptly to issue the registration or to determine upon what basis the registration may not be issued. The Building Official shall respond to the applicant not later than two (2) weeks following receipt of the application.

D. **Expiration and Renewal of Registration**. Expired registrations shall be routinely reactivated by payment of a renewal fee if the application information remains accurate. Fees for initially establishing registration and for renewal of registration shall be set in accordance with Section 4.09 below. A registration may be renewed without penalty at any time from sixty (60) days preceding the date of expiration through ninety (90) days following the date of expiration. A registration not renewed for ninety (90) days beyond the date of expiration shall require resubmittal of registration information and payment of a fee as for an initial registration.

E. **Transfer of Registration Prohibited**. No Registrant under this article shall for any purpose allow the registration, by name or other identification, to be transferred or assigned to, or in any manner directly or indirectly used by, any person, firm or corporation other than the one to whom the registration was issued. Company representatives other than the registered principal shall be required to have a notarized statement from the principal in order to transact business.

F. **Registration Suspended**. The Building Code Board of Appeals shall have the authority to suspend any registration issued under this article for any of the following acts by the Registrant:

1. Forfeiting an appeal of a Stop Order issued under I.B.C. and I.R.C., Section 114, by continued work after the issuance of said Stop Order; (Amend Ord 02-020, 2/5/02)

2. Forfeiting an appeal under Section 2.06(C) above of this Building Code by initiating work in violation of the Board's decision or prior to the Board's decision;

3. Causing or permitting the unauthorized or prohibited transfer or assignment of a valid registration, or providing false, misleading or inaccurate information when applying for registration;

4. Being convicted in Municipal Court of two (2) violations of any of the provisions of this Building Code committed within a period of twelve (12) consecutive months provided, however, that remedy of the violation within twenty (20) days of a Stop Order shall cause the waiver of any conviction for the original violation for the purpose of this subsection;

5. Failure of a registered contractor to secure permits prior to commencement of work necessitating such permit;

6. Failure of a registered contractor to request all inspections as may be established by the Construction Chapter; or

7. Failure of a registered contractor to provide the Building Official accurate revisions of registration information, including any change of address or telephone number and/or licensees. (Amend Ord 12-020, 4/24/12)

Such suspension of registration shall be for a time not to exceed six (6) months. After expiration of such period of time as the Board shall have designated, and after payment of any outstanding fines and the routine renewal fee if it has become due in the interim, the suspended registration shall again become valid and effective for the balance of its time until expiration or a subsequent suspension or revocation. (Amend Ord 98-141, 10/27/98)

G. **Registration Revoked**. The Building Code Board of Appeals shall have the authority to revoke any registration issued under this article for:

1. Conviction of the practice of any fraud or deceit in securing a registration or a permit, or of a violation of Subsection (E) above;

2. Convictions in Municipal Court of three (3) violations of any of the provisions of this Building Code committed within a period of twelve (12) consecutive months: provided, however, that remedy of the violation

within twenty (20) days of a Stop Order shall cause the waiver of any conviction for the original violation for the purpose of this subsection;

3. Accumulation of two (2) decisions of the Board to suspend registration; or

4. Accumulation within a period of twelve (12) months of two (2) forfeitures of appeals of Stop Orders issued under I.B.C. and I.R.C., Section 114, by continued work after the issuance of said Stop Orders. (Amend Ord 02-020, 2/5/02)

Such revocation of registration by the Board shall be full and final cancellation of such registration and shall be effective on the date of the Board's decision. No Registrant whose registration is revoked by the Board shall be allowed in the future to be registered again in the City of Arlington under this article.

H. **Suspension or Revocation Hearing**. In considering charges under this article regarding suspension or revocation of a registration, the Building Code Board of Appeals shall proceed upon sworn information furnished it by any person or upon information provided by the Building Official. Such information shall be in writing and shall be duly verified by the person familiar with the allegations made. The Board shall make an order setting the matter for hearing at a specified time and place, and the Secretary of the Board shall cause a copy of the Board's order and of the sworn information to be served upon the Registrant by registered mail at least fifteen (15) days before the date set for the hearing. The Registrant may appear in person or by counsel at the time and place named in the order and present a defense to the Board. The City Attorney for the City of Arlington shall provide counsel for the Board. If the Registrant fails or refuses to appear, the Board may proceed to hear and determine the charge in the registrant's absence. If the registrant pleads guilty or if, upon a hearing, the Board finds any of the charges to be true, it may enter an order suspending or revoking the certificate of registration. Failure to properly perfect an appeal in a court of competent jurisdiction within ten (10) days of receipt of the Board's decision shall render the Board's decision final. Suspension or revocation of a registration resulting from a decision of the Board shall preclude the Registrant from securing a permit for work controlled by that registration in the City of Arlington or from becoming so registered under any different identification as long as the suspension or revocation is in effect. (Amend Ord 12-020, 4/24/12)

I. **Exemption for Owner.** Except for permits required by Article VIII below, a homeowner’s registration shall be required for work to be performed on an existing structure when the person performing the work is the owner of the

structure who resides therein as his homestead, and is not assisted by any other person for remuneration. The homeowner shall be termed a Registrant for the purposes of such a project after proper registration. All requirements for permits for the work and all other applicable provisions of this Building Code shall remain in force. (Amend Ord 09-024, 5/5/09)

Section 4.02 <u>Commercial Site Plan and Permits Required</u>

A. It shall be unlawful for any Registrant or person without first obtaining a separate building permit for such work from the Building Official:

1. to erect, construct, enlarge, alter, repair, move, improve, remove, convert or demolish any building or structure;

   EXEMPTION: see exemptions in Subsections (B) and (C) below.

2. to install, enlarge or repair any fence;

   EXEMPTION: Repair or replacement of fencing where not less than 50% of one side of the fence is being repaired and/or replaced.

3. to erect, alter a sign, including the copy face or lettering of any sign, either by changing the message or by renovating an existing message, or erect any sign or sign structure;

   EXEMPTION: Changing a changeable copy message or a message center sign message; general maintenance such as repainting the same message or changing the face of a sign permitted as an off-site advertising sign;

4. to reroof any building or structure;

5. to excavate, grade, or fill property, or cause the same to be done;

   EXEMPTION: Excavation for construction of a structure permitted under this code; Refuse disposal sites controlled by other regulations; Excavations for wells, or trenches for utilities; Mining, quarrying, excavating, processing or stockpiling rock, sand, gravel, aggregate or clay controlled by other regulations, provided such operations do not affect the lateral support of, or significantly increase stresses in, soil on adjoining

properties; or, Exploratory excavations performed under the direction of a registered design professional.

Separate permits are required for electrical, plumbing and mechanical work as set forth in the Electrical, Mechanical and Plumbing Chapters of this Code. (Amend Ord 18-017, 4/10/18)

B. Permits shall not be required for the following items. Exemption from permit requirements of this code shall not be deemed to grant authorization for any work to be done in any manner in violation of the provisions of this code or any other laws or ordinances.

1. Retaining walls that are not over 4 feet (1219 mm) in developed height at any point when measured from the bottom of the footing to the top of the wall, unless supporting a surcharge or imposed load or impounding Class I, II or IIIA liquids. See Article 1 of this Chapter regarding "tiered" retaining walls.

2. Painting, papering, tiling, carpeting, cabinets, counter tops and similar finish work.

3. Swings and other playground equipment.

4. Prefabricated inflatable swimming pools that are less than 24 inches (610 mm) deep.

5. Window awnings supported by an exterior wall which do not project more than 54 inches (1372 mm) from the exterior wall and do not require additional support.

6. Replacement of siding materials with materials of similar character. The installation of siding systems such as, but not necessarily limited to, stucco and Exterior Insulation and Finish Systems, require a permit.

7. Nonfixed and movable fixtures, cases, racks, counters and partitions not over 5 feet 9 inches (1753 mm) in height.

8. Shade cloth structures constructed for nursery or agricultural purposes. (Amend Ord 13-055, 12/3/13)

C. For 1-and 2-family structures only regulated by the I.R.C., permits shall not be required for the following items. Exemption from permit requirements of this

code shall not be deemed to grant authorization for any work to be done in any manner in violation of the provisions of this code or any other laws or ordinances.

1. Building:

    a. One-story detached accessory structures used as tool and storage sheds and similar uses, provided the floor area does not exceed 100 square feet (9.29 m^2).

    b. Flatwork (pedestrian sidewalks, vehicle parking and maneuvering areas) on private property. (Amend Ord 13-055, 12/3/13)

2. Electrical:

    a. Listed cord-and-plug connected temporary decorative lighting.

    b. Reinstallation of attachment plug receptacles but not the outlets thereof.

    c. Replacement of branch circuit over current devices of the required capacity in the same location.

    d. Electrical wiring, devices, appliances, apparatus or equipment operating as less than 25 volts and not capable of supplying more that 50 watts of energy.

    e. Minor repair work, including the replacement of lamps or the connection of approved portable electrical equipment to approved permanently installed receptacles.

2. Plumbing

    a. Portable heating, cooking or clothes drying appliances.

    b. Replacement of any minor part that does not alter approval of equipment or make such equipment unsafe.

    c. Portable-fuel-cell appliances that are not connected to a fixed piping system and are not interconnected to a power grid.

    d. The stopping of leaks in drains, water, soil, waste or vent pipe; provided, however, that if any concealed trap, drainpipe, water,

soil, wasted or vent pipe becomes defective and it becomes necessary to remove and replace the same with new material, such work shall be considered as new work and a permit shall be obtained and inspection made as provided in this code.

e. The clearing of stoppages or the repairing of leaks in pipes, valves or fixtures, and the removal and reinstallation of water closets, provided such repairs do not involve or require the replacement or rearrangement of valves, pipes or fixtures.

3. Mechanical

a. Portable heating appliances.

b. Portable ventilation appliances.

c. Portable cooling units.

d. Steam, hot- or chilled-water piping within any heating or cooling equipment regulated by this code.

e. Replacement of any minor part that does not alter approval of equipment or make such equipment unsafe.

f. Portable evaporative coolers.

g. Self-contained refrigeration systems containing 10 pounds (4.54 kg) or less of refrigerant or that are actuated by motors of 1 horsepower (746 W) or less.

h. Portable-fuel-cell appliances that are not connected to a fixed piping system and are not interconnected to a power grid.

D. Emergency Repairs. Where equipment replacements and repairs must be performed in an emergency situation, the permit application shall be submitted within the next working day to the building official.

E. For other than 1 and 2 family dwellings, approval of a Commercial Site Plan is required prior to filing the application for a building permit. Two copies of the "Accepted for Construction" Commercial Site Plan shall be submitted with each application for a building permit for the following work categories:

1. The construction of a new building,

2. The construction of an addition to an existing building.

3. The grading, excavation or filling of a parcel when such work is not included in the scope of an issued building permit.

F. A Commercial Site Plan shall demonstrate compliance with the applicable zoning, environmental, fire and engineering regulations specific to the proposed project.

G. A permit shall be issued only to a Registrant meeting the conditions of Section 4.01 above, and only after all other requirements defined in this article have been accomplished. (Amend Ord 12-020, 4/24/12)

H. Work Performed without Required Permits.

1. This subsection applies to a person who owns, occupies, or exercises control over a building or premises where work described by Subsection (A) is performed that requires a building permit, electrical permit, mechanical permit, or electrical permit.

2. A person who performs work described by Subsection (A) or who allows such work to be performed at a building or premises has a duty to obtain all required permits from the Building Official prior to such work being performed. If work described by Subsection (A) is performed without first obtaining a required permit from the Building Official, a person has a continuing duty to obtain any required permit for the work that was performed.

3. When work described by Subsection (A) is performed at a building or premises without first obtaining any required permit from the Building Official, it shall be unlawful for a person to own, occupy, keep, maintain, or exercise control over the building or premises until any required permit is obtained for the work that was performed. Each day that the person owns, occupies, keeps, maintains, or exercises control over the building or premises where such work was performed without having obtained any required permit shall constitute a separate offense. (Amend Ord 18-017, 4/10/18)

Section 4.02.5 <u>Application for Commercial Site Plan</u>

A. To obtain approval for a Commercial Site Plan, the applicant shall first file an application with the Building Official in writing on a form furnished for that purpose by said Building Official. Every such application shall:

1. Identify and describe the proposed development;

2. Describe the land on which the proposed work is to be done by lot, block, tract and building and street address, or similar description that will readily identify and definitely locate the proposed building or work;

3. Be accompanied by plans and specifications as required to demonstrate compliance with the zoning, environmental, engineering and fire regulations applicable to the project location;

4. Be signed by the applicant or an authorized agent, who may be required to submit evidence to indicate such authority; and

5. Give such other pertinent information as is deemed necessary by the Building Official.

B. Accepted plans and specifications shall not be changed, modified or altered without written authorization from the Building Official, and all work shall be done in accordance with the approved plans.

C. Final plans or other documents that will be archived must be submitted in an electronic format specified by the Director of Community Development and Planning ("CDP Director") as a condition to issuance of any type of permit, approval, or other action related to the final plans or documents. The City may provide an electronic conversion service for a fee in the amount set forth by City Council resolution. The CDP Director shall provide a schedule indicating which documents must be provided electronically, at which point during the approval process, and other information as necessary to implement an electronic archiving program. (Amend Ord 10-009, 1/12/10)

Section 4.03 <u>Application for Permit</u>

To obtain a permit, the applicant shall first file an application with the Building Official in writing on a form furnished for that purpose by said Building Official. Every such application shall:

A. Identify and describe the work to be covered by the permit for which application is made;

B. Describe the land on which the proposed work is to be done, by lot, block, tract, and building and street address, or similar description that will readily identify and definitely locate the proposed building or work;

C. Indicate the use or occupancy for which the proposed work is intended;

D. Be accompanied by plans and specifications as required in Section 4.04 of this article below;

E. State the fair market construction valuation of the proposed work; (Amend Ord 12-020, 4/24/12)

F. Be signed by the applicant (Registrant) or an authorized agent, who may be required to submit evidence to indicate such authority; (Amend Ord 96-93, 7/2/96)

G. In the case of single family residential construction permits, include a certification by the builder that the structure will comply or will not comply with applicable deed restrictions or real property restrictive covenants; and

H. Give such other pertinent information as is deemed necessary by the Building Official. (Amend Ord 91-09, 1/22/91)

Section 4.04 <u>Plans and Specifications</u>

A. With each application for a building permit and when required by the Building Official for enforcement of any provisions of this Building Code, two (2) or more sets of plans and specifications shall be submitted. The Building Official may require plans, computations and specifications to be prepared and designed by an engineer or architect licensed by the State of Texas to practice as such even if not

required by State law. The engineers' or architects' professional seal shall be affixed to the documents.

EXCEPTION: Except when specifically required by the Building Official, plans, computations and specifications need not be submitted for the following:

(1) One (1) story buildings of Type V conventional wood frame construction, with an area not exceeding six hundred (600) square feet;

(2) Groups R-3 and U Occupancies of Type V conventional wood frame construction; or

(3) The Building Official may waive the submission of plans, calculations, construction, inspection requirements and other data if it is found that the nature of the work applied for is such that reviewing of plans is not necessary to obtain compliance with the Code.

B. Plans and specifications shall be drawn to scale and shall be of sufficient clarity to indicate the nature and extent of the work proposed and show in detail that it will conform to the provisions of this Building Code and all other relevant laws, ordinances, rules and regulations. The first sheet of each set of plans shall give the building and street address where the work is to be performed and the name and address of the owner and person who prepared said plans. Plans shall include a plot plan showing the location of the proposed building and of every existing building on the property. In lieu of detailed specifications, the Building Official may approve references on the plans to a specific section or part of this Building Code or other ordinances or laws. The construction documents shall also be in conformance with the following:

(1) **Means of egress.** The construction documents shall show in sufficient detail the location, construction, size and character of all portions of the means of egress in compliance with the provisions of this code. In other than occupancies in Groups R-2, R-3, and I-1, the construction documents shall designate the number of occupants to be accommodated on every floor, and in all rooms and spaces.

(2) **Exterior wall envelope.** Construction documents for all buildings shall describe the exterior wall envelope in sufficient detail to determine compliance with this code. The construction documents shall provide details of the exterior wall envelope as required, including flashing, intersections with dissimilar materials, corners, end details, control joints,

intersections at roof, eaves or parapets, means of drainage, water-resistive membrane and details around openings.

The construction documents shall include manufacturer's installation instructions that provide supporting documentation that the proposed penetration and opening details described in the construction documents maintain the weather resistance of the exterior wall envelope. The supporting documentation shall fully describe the exterior wall system which was tested, where applicable, as well as the test procedure used.

(3) **Demolition permits.** In the case of proposed demolition, the site plan shall show construction to be demolished and the location and size of existing structures and construction that are to remain on the site or plot. (Amend Ord 12-020, 4/24/12)

C. Computations, stress diagrams and other data sufficient to show the correctness of the plans shall be submitted when required by the Building Official. Plans by the applicant for buildings more than two (2) stories in height of other than Group R-3 and U Occupancies shall indicate how required structural and fire-restrictive integrity will be maintained where a penetration will be made for electrical, mechanical, plumbing and communications conduits and pipes, and similar systems. (Amend Ord 96-93, 7/2/96)

D. Final plans or other documents that will be archived must be submitted in an electronic format specified by the Director of Community Development and Planning ("CDP Director") as a condition to issuance of any type of permit, approval, or other action related to the final plans or documents. The City may provide an electronic conversion service for a fee in the amount set forth by City Council resolution. The CDP Director shall provide a schedule indicating which documents must be provided electronically, at which point during the approval process, and other information as necessary to implement an electronic archiving program. (Amend Ord 10-009, 1/12/10)

Section 4.05 <u>Building Permits Issued</u>

A. The Building Official shall examine or cause to be examined the application, plans and specifications filed by an applicant for a permit shall be reviewed. Such plans may also be reviewed by other departments of the City of Arlington to check compliance with the laws and ordinances under their jurisdiction, including but not limited to review by the Engineering, Fire, Community Services, Community

Development and Planning, and the Public Works and Transportation Department of the City of Arlington to ensure compliance with the Traffic Study Provisions adopted by resolution of the City Council. If the Building Official finds that the work described in an application for permit and the plans filed therewith conform to the requirements of this Building Code and other pertinent laws and that the permit fee has been paid, a permit shall be issued.

EXCEPTION: Except by specific approval by the Building Official or an authorized representative, a permit shall not be issued in a development where the construction of streets, drainage, water, sewer and other such public improvement facilities have not been completed and accepted by the City of Arlington.

In lieu of the plan review performed by the Building Official, the owner of a property may choose to contract with a Third Party Provider that is properly registered with the City for plan review. Plan reviews performed by Third Party Organizations are subject to the terms of the program as authorized by resolution of the City Council of the City of Arlington.

B. **Approval of construction documents.** When the building official issues a permit, the construction documents shall be approved, in writing or by stamp, as;

> "CITY OF ARLINGTON APPROVED PLANS. These plans must be kept on the job site and be available at the inspector's request. Changes to these plans must be approved in the same manner as these plans were approved."

One set of construction documents so reviewed shall be retained by the building official. The other set shall be returned to the applicant, shall be kept at the site of work and shall be open to inspection by the building official or a duly authorized representative.

C. Accepted plans and specifications shall not be changed, modified or altered without written authorization from the Building Official, and all work shall be done in accordance with the plans.

D. The Building Official may issue a permit for the construction of part of a building or structure before the entire plans and specifications for the whole building or structure have been submitted or approved, provided adequate information and detailed statements have been filed complying with all pertinent requirements of this Building Code. The holder of such permit shall proceed at personal risk without assurance that the permit for the entire building or structure will be granted.

Deferred submittals.
For the purposes of this section, deferred submittals are defined as those portions of the design that are not submitted to the building official at the time of the application and that are to be submitted to the building official within a specified period.

Deferred submittals shall have the prior approval of the building official. The registered design professional in responsible charge shall list the deferred submittals on the construction documents for review by the building official.

Documents for deferred submittal items shall be submitted to the registered design professional in responsible charge who shall review them and forward them to the building official with a notation indicating that the deferred submittal documents have been reviewed and found to be in general conformance to the design of the building. The deferred submittal items shall not be installed until the deferred submittal documents have been approved by the building official.

E. Upon issuance of a building permit, the Building Official will issue a Building Permit representing that a permit has been issued. The Building Permit shall contain the address and legal description of the location, the name of the general contractor and a description of the work. The Building Permit shall be posted on the job location at all times during the time the building permit is valid and may not be removed until such time that the Building Official issues a final approval. The Building Permit shall be posted in front of the building so that it is visible from the addressed street or fire lane at all times. Work may be ordered to stop when such Building Permit is not displayed in accordance with this section. (Amend Ord 12-020, 4/24/12)

Section 4.05.5 <u>Expiration of Commercial Site Plan</u>

Every Commercial Site Plan approved by the Building Official under the provisions of this Building Code shall expire by limitation of time and become null and void if the owner, agent or authorized developer has not filed a valid application for a building permit within one hundred eighty (180) days from the date of approval of the Commercial Site Plan. An expired Commercial Site Plan must be reviewed as a new application before an application for a building permit may be submitted. (Amend Ord 09-024, 5/5/09)

Section 4.06 <u>Validity of Permit</u>

The issuance or granting of a permit or acceptance of plans and specifications shall not be construed to be a permit for, or an approval of, any violation of any of the provisions of this Building Code or any other applicable law. No permit presuming to give authority to violate or cancel the provisions of this Building Code shall be valid, except as the work or use, which it authorizes, is lawful.

The issuance of a permit based upon plans and specifications shall not prevent the Building Official from thereafter requiring the correction of errors in said plans and specifications or from preventing building operations being carried on thereunder when in violation of this Building Code or of any other chapter of the Code of the City of Arlington.

In the event a court of competent jurisdiction determines that lawfully filed deed restrictions or lawfully filed real property restrictive covenants on single family residential property within the City of Arlington would be violated by the construction that is the subject of the permit, such court may restrain or enjoin the Building Official from issuing the building permit for a period not to exceed sixty (60) days. (Amend Ord 98-141, 10/27/98)

Section 4.07 <u>Expiration of Permit</u>

Every permit issued by the Building Official under the provisions of this Building Code shall expire by limitation of time and become null and void if the building or work authorized by such permit is not commenced within one hundred eighty (180) days from the date of such permit, or if the building or work authorized by such permit is suspended or abandoned for a period of one hundred eighty (180) days at any time after the work is commenced. Before such work can be recommenced, a new permit shall be first obtained.

Any permittee holding an unexpired permit may apply in writing for an extension of the time within which work may commence under that permit when the permittee is unable to commence work within the time required for good and satisfactory reasons. The Building Official may extend the time for action by the permittee for a period not exceeding one hundred eighty (180) days. The permittee shall pay a fee for the extension of an unexpired permit. No permit shall be extended more than once.

(Amend Ord 09-024, 5/5/09)

Section 4.08 <u>Suspension or Revocation of Permit</u>

A. The Building Official may, in writing, suspend or revoke a permit issued under provisions of this Building Code whenever the permit is issued in error or on the basis of incorrect information having been supplied, or in violation of any law, including any provision of the Code of the City of Arlington. The Building Official may also deny building inspections or new permits to a contractor whose business registration with the City of Arlington is not in active status.

B. The Building Official may, in writing, revoke a permit for the construction of a 1- and 2-family dwelling issued under provisions of this Building Code whenever the completion of the project is delayed beyond a 24 month period if there has not been substantial progress made towards completion of the project.

(Amend Ord 09-024, 5/5/09)

Section 4.09 <u>Building Permit Fees</u>

A fee for each permit required by this Building Code and any plan review fees shall be set by resolution of the City Council and shall be paid to the Building Official prior to the issuance of such permit and review of any plans. The determination of value or valuation hereunder shall be made by said Building Official. The valuation to be used in computing the permit and plan review fees shall be the total value of all construction work for which the permit is issued, as well as all finish work, painting, roofing, electrical, plumbing, heating, air conditioning, elevators, fire-extinguishing systems and any other permanent work or permanent equipment. All methods of calculation and restrictions set forth in Section 5.01 of this Chapter shall apply to said fees.

Where work for which a permit is required by this Building Code is begun prior to obtaining said permit, the specified fees shall be doubled, but the payment of such double fee shall not relieve any persons from fully complying with the requirements of this Building Code in the execution of the work nor from any other penalties prescribed herein.

Section 4.10 <u>Plan Review Fees</u>

When issuance of a permit depends on review and acceptance of drawings depicting the proposed work, a plan review fee shall be paid at the time of submitting the drawings for review. The plan review fee shall be nonrefundable. The building permit

application shall not be received until the plan review fee is paid. The plan review fee shall be set from time to time by resolution of the City Council of the City of Arlington. (Amend Ord 04-086, 9/21/04)

Section 4.11 <u>Expiration of Building Permit Application and Plan Review</u>

An application for which no building permit is issued within one hundred eighty (180) days following the date of application may be voided due to limitation of time, and plans submitted for review may thereafter be returned to the applicant or destroyed by the Building Official. The Building Official may extend the time for action on the application due to circumstances beyond the control of the applicant which have prevented action from being taken. The application may be extended for an additional 180 days upon a request in writing submitted to the Building Official. The application may be extended upon approval by the Building Official and payment of the extension fee prior to the expiration of the building permit application. An expired application may only be reactivated by the filing of a new application, including plans and fees. An applicant's written request for voluntary withdrawal of the application shall be deemed to be the same as an expiration of the application. (Amend Ord 09-024, 5/5/09)

Section 4.11.5 <u>Expiration of Commercial Site Plan Application</u>

A. An application for a Commercial Site Plan that is not approved for permitting within one hundred eighty (180) days following the date of application may be voided due to limitation of time, and plans submitted for review may thereafter be returned to the applicant or destroyed by the Building Official. The Building Official may extend the time for action on the application due to circumstances beyond the control of the applicant which have prevented action from being taken. The application may be extended for an additional 180 days upon a request in writing submitted to the Building Official. The application may be extended upon approval by the Building Official. An expired application may only be reactivated by the filing of a new application, including plans and any fees prior to the expiration of the Commercial Site Plan. An applicant's written request for voluntary withdrawal of the application shall be deemed to be the same as an expiration of the application.

B. In cases where a building permit has expired due to limitations, a Commercial Site Plan will expire 24 months from the date of Commercial Site Plan approval if an application for another building permit is not filed.

C. In cases where development is phased, a Commercial Site Plan will expire 24 months from the date of Commercial Site Plan approval if an application for a building permit is not filed for all of the undeveloped phases. (Amend Ord 09-024, 5/5/09)

Section 4.12 Refunds

There shall be no refund of any plans review fee. A permit fee may be refunded only upon the following: (Amend Ord 12-020, 4/24/12)

A. When a permit has been issued and no part of the work has commenced, a refund of 50% may be authorized. The refund shall be reduced by any applicable service charges;

B. When the permit has been issued through an error on the part of the City of Arlington and it is found that the work applied for cannot be allowed, the refund shall be made in full;

C. Service charges for refunds shall not exceed the original permit fees; and

D. When the refund is requested in writing within 90 days of the date of payment. (Amend Ord 12-020, 4/24/12)

Section 4.13 Inspections

A. **General**. All construction or work for which a permit is required shall be subject to inspection by the Building Official, and certain types of construction may have continuous inspection by special inspectors as specified in Section 4.14 below.

A survey of the lot may be required by the Building Official to verify compliance of the structure with approved plans. It shall be the duty of the permittee to cause the work to be accessible and exposed for inspection purposes.

EXCEPTION: The owner of a property may choose to contract with a Third Party Provider that is properly registered with the City for inspections. Inspections performed by Third Party Organizations are subject to the terms of the program as authorized by resolution of the City Council of the City of Arlington. A Third Party Provider shall not be authorized to grant final approval or grant a Certificate of Occupancy. (Amend Ord 12-020, 4/24/12)

B. **Approvals Required**. No work shall be done on any part of the building or structure beyond the point indicated in each successive inspection without the permittee first obtaining the written approval of the Building Official. Such written approval shall be given only after an inspection has been made of each successive step in the construction as indicated by each of the Required Inspections. Failure by the permittee to contact the Building Official for any required inspection shall be an offense.

There shall be a final inspection and approval on all buildings when completed and ready for occupancy before such occupancy is allowed to occur.

C. **Required Inspections**. It shall be the duty of the holder of the building permit or their duly authorized agent to notify the building official when work is ready for inspection. It shall be the duty of the permit holder to provide access to and means for inspections of such work that are required by this code.

Work shall not be done beyond the point indicated in each successive inspection without first obtaining the approval of the building official. The building official, upon notification, shall make the requested inspections and shall either indicate the portion of the construction that is satisfactory as completed, or notify the permit holder or his or her agent wherein the same fails to comply with this code. Any portions that do not comply shall be corrected and such portion shall not be covered or concealed until authorized by the building official.

The Building Official, upon notification from the permit holder or an authorized agent, shall make the following inspections and shall either approve that portion of the construction as completed or shall notify the permit holder or an authorized agent in what respects the same fails to comply with this Building Code:

1. Footing and foundation inspections. Footing and foundation inspections shall be made after excavations for footings are complete and any required reinforcing steel is in place. For concrete foundations, any required forms shall be in place prior to inspection. Materials for the foundation shall be on the job, except where concrete is ready mixed in accordance with ASTM C 94, the concrete need not be on the job.

2. Concrete slab and under-floor inspection. Concrete slab and under-floor inspections shall be made after in-slab or under-floor reinforcing steel and building service equipment, conduit, piping accessories and other ancillary equipment items are in place, but before any concrete is placed or floor sheathing installed, including any subflooring.

3. Lowest floor elevation. In flood hazard areas, upon placement of the lowest floor, including the basement, and prior to further vertical construction, the elevation certification required in Section 1612.5 shall be submitted to the building official.

4. Frame inspection. Framing inspections shall be made after the roof deck or sheathing, all framing, fireblocking and bracing are in place and pipes, chimneys and vents to be concealed are complete and the rough electrical, plumbing, heating wires, pipes and ducts are approved.

5. Lath and gypsum board inspection. Lath and gypsum board inspections shall be made after lathing and gypsum board, interior and exterior, is in place, but before any plastering is applied or gypsum board joints and fasteners are taped and finished.

   Exception: Gypsum board that is not part of a fire-resistance-rated assembly or a shear assembly.

6. Fire-resistant penetrations. Protection of joints and penetrations in fire-resistance-rated assemblies shall not be concealed from view until inspected and approved.

7. Energy efficiency inspections. Inspections shall be made to determine compliance with the energy code and shall include, but not be limited to, inspections for:

   a. envelope air leakage and insulation installation and *R* and *U* values;

   b. fenestration *U* values and SHGC values,

   c. duct system sealing and insulation *R* values;

   d. HVAC and water-heating equipment efficiency, and

   e. Lighting switching and wattage allowances.

8. Other inspections. In addition to the inspections specified above, the building official is authorized to make or require other inspections of any construction work to ascertain compliance with the provisions of this code and other laws that are enforced by the department of building safety.

9. Special inspections. For special inspections, see Section 1704 of the IBC.

10. Final inspection. The final inspection shall be made after all work required by the building permit is completed.

In the event a court of competent jurisdiction determines that lawfully filed deed restrictions or lawfully filed real property restrictive covenants on single family residential property within the City of Arlington would be violated by the construction that is the subject of the final inspection, such court may restrain or enjoin the Building Official from completing a final inspection for a period not to exceed sixty (60) days. (Amend Ord 12-020, 4/24/12)

D. **Other Inspections**. In addition to the required inspections specified in Subsection (C) above, the Building Official may make or require any other inspections of any construction work to ascertain compliance with the provisions of this Building Code and other applicable laws which are enforced by the City of Arlington.

For the purpose of determining compliance with I.B.C., Section 3402 the Building Official may cause any structure to be reinspected. (Amend Ord 12-020, 4/24/12)

E. **Reinspections**. A reinspection fee may be assessed for each inspection or reinspection when such portion of work for which the inspection is called is not complete, when corrections called for are not made, or for failure to provide access on the date for which inspection is requested.

This subsection is not to be interpreted as requiring reinspection fees the first time a job is rejected for failure to comply with the requirements of this Building Code, but as controlling the practice of permittees calling for inspections before the job is ready for such inspection or reinspection. Reinspection fees shall be paid in accordance with the fee schedule resolution adopted by the City Council of the City of Arlington pursuant to Section 4.09 above. In instances where reinspection fees have been assessed, additional inspection of the work may be denied until the required fees have been paid.

Section 4.14 Certificate of Occupancy

A. When required. No premises, building or structure, except Group R-3 and Group U shall be used or occupied until a Certificate of Occupancy has been issued as provided herein. A certificate of occupancy is required when:

1. The initial occupancy of a building or tenant space.

2. To change the tenancy or tenant of building or tenant space.

3. To change the name or ownership of a business.

4. To expand a lease space.

5. To acquire a Certificate of Occupancy for a shell building. A shell Certificate of Occupancy shall not permit the use of the structure for any purposes. A shell Certificate of Occupancy is for purposes of utility releases for house meters.

6. To “clean and show” a building or tenant space. A ”clean and show” certificate of occupancy shall not permit the use of the structure with the exception of cleaning and preparing the building or tenant space for showing prospective tenants. (Amend Ord 12-020, 4/24/12)

B. Change in use. Changes in the character of occupancy or use of a building shall not be made, except as specified in I.E.B.C. (Amend Ord 18-017, 4/10/18)

C. Certificate Issued. The Building Official shall issue a Certificate of Occupancy upon a finding that the premises complies with the Building Code, provisions of the "Zoning" Chapter of the Code and all other applicable development regulations of the City of Arlington. For new structures or when the occupant is of a different character of occupancy or use from the previous certificate holder, the Building Inspections Division shall make an inspection. Where no change in character of occupancy is proposed for a structure previously granted a Certificate of Occupancy, no inspection is necessary unless specifically required by the Building Official. In the event that a tenant space is being altered, enlarged or reduced in size, or if the Building Official believes that the previous tenant altered the space without benefit of permits, an inspection may be required prior to the occupancy. Other City departments may require inspections prior to the granting of a Certificate of Occupancy. Issuance of a Certificate of Occupancy shall not be construed as an approval of a violation of the provisions of this code or of other ordinances of the jurisdiction.

An applicant for a Sexually Oriented Business as required by the Sexually Oriented Business Chapter of the City Code must first obtain a Certificate of Occupancy for a Sexually Oriented Business from the Building Official. The Building Official shall issue or deny a Certificate of Occupancy to a Sexually Oriented Business not more than sixty (60) business days subsequent to the date of the applicant’s submission of such application to the Building Official. Such application for a Certificate of Occupancy shall be deemed approved if not approved or denied within such time period.

The Certificate of Occupancy shall contain:

1. The address of the building;

2. The name of the business located at said premises, building or structure;

3. The allowable zoning use for which the certificate is issued;

4. The zoning district in which the use is located; and

5. Any conditions of the granting of the certificate. (Amend Ord 12-020, 4/24/12)

D. Temporary Certificate. A temporary Certificate of Occupancy may be issued by the Building Official for the use of a portion or portions of a building, structure, or site prior to the completion of the entire building, structure or site improvements but only if that portion or portions can be occupied safely. The Building Official shall set a time period during which the temporary Certificate of Occupancy is valid. (Amend Ord 08-090, 9/30/08)

E. Posting. The Certificate of Occupancy shall be posted in a conspicuous place on the premises and shall not be removed without permission of the Building Official.

F. Revocation. The Building Official may, in writing, suspend or revoke a Certificate of Occupancy or a temporary Certificate of Occupancy issued under the provisions of this Code whenever the certificate is issued in error, or on the basis of incorrect information supplied, or when it is determined that the building or structure or portion thereof is in violation of any ordinance or regulation or any provision of this Code or other provisions of law. Upon suspension or revocation of a Certificate of Occupancy, the Building Official shall have the authority to disconnect, or to order the electricity supply agency to disconnect, all electric service to any premises affected by the revoked or suspended Certificate of Occupancy. (Amend Ord 12-020, 4/24/12)

G. Permits, Inspections, Certificates and Approvals for Sexually Oriented Businesses. The provisions of Subsections 4.01 (H), (I) and (J) of the Sexually Oriented Business Chapter of the Code of the City of Arlington, Texas, 1987, apply and prevail over any provision of this Construction Chapter with respect to the processing of applications, permits, inspections, certificates and approvals regarding sexually oriented businesses. (Amend Ord 03-087, 7/29/03)

H. Application Required. Any person, firm or corporation desiring to initially occupy a building or tenant space, to change the tenancy of building or tenant space, change the name or ownership of a business, to expand a lease space, to clean and show a building or tenant space or to acquire a Certificate of Occupancy for a shell building must complete an application and submit to the Building Official for review along with the non-refundable application fee as set forth by resolution by the City Council. The application shall contain the following information:

1. The address of the application,

2. The proposed business name of the occupant and/or tenant,

3. The proposed use of the building or tenant space,

4. The gross floor area of the proposed use,

5. The individual's name of the principal or owner of the proposed use of the building or lease space, or the name of a presiding officer of a firm, corporation, partnership or other business entity of the proposed use of the building or lease space,

6. The mailing address (other than location being applied for) of the principal or owner,

7. The Texas Driver's License number or other government issued picture identification of the principal or owner,

8. Proof of a State of Texas Limited Sales and Use Tax Certificate with a valid City of Arlington business locations for proposed businesses that will collect a sales and/or use tax, and

9. Other information as determined necessary for the building official to determine that the proposed use satisfies all the development regulations of the City of Arlington.

The application shall be submitted and signed by the principal, owner or designated agent of the principal or owner and the designated agent's Texas Driver's License number or other government issued picture identification certifying that the applicant is authorized agent so empowered to make the application on behalf of the principal or owner and agrees to be subject to the same rules of review and approval as the principal or owner. (Amend Ord 04-004, 1/13/04)

Section 4.14.5 <u>Mobile Food Establishment Certificate of Occupancy</u>

A. It shall be unlawful for a person or entity to own or operate a mobile food establishment on private property within the City of Arlington without a valid mobile food establishment certificate of occupancy ("MFE-CO") tied to an appropriate certificate of occupancy in an approved underlying land use, or as part of a preapproved temporary outdoor event (under Section 13.12, herein). A mobile food establishment is commonly referred to as a "food truck" and shall be capable of immediate mobility by use of a licensed motor vehicle. This definition shall include the term "mobile food unit" under state law, including the Texas Food Establishment Rules, or its successor statute.

B. The holder of a valid certificate of occupancy granted under Section 4.14 above may apply for a MFE-CO to be tied to the underlying certificate of occupancy if the existing underlying certificate of occupancy is for one of the following nonresidential uses:

1. Restaurant;
2. Bar;
3. Microbrewery, microdistillery, and winery; and
4. Theatre.

C. A MFE-CO may only be approved for a property located in a Downtown Business (DB) zoning use district or within a non-residential or mixed-use zoning use district located in the Downtown Neighborhood Overlay (DNO). Said zoning use districts are defined in the "Unified Development Code" Chapter of the Arlington City Code.

D. An MFE-CO shall only remain valid as long as the corresponding underlying certificate of occupancy. If the underlying certificate of occupancy expires, ceases to operate, or is revoked for any reason, the validity of the MFE-CO shall also automatically terminate without notice or any further action of the City.

E. An MFE-CO may only be approved for operation on properties that have sufficient restroom facilities for their customers within the underlying property use, together with the additional customers of the mobile food establishment.

F. It shall be unlawful for any mobile food establishment to operate, park, stand, or remain on any public street, alley, or right-of-way unless part of a preapproved event sponsored by the City of Arlington.

G. It shall be unlawful for any mobile food establishment to operate without a current, valid health permit issued by the City of Arlington.

H. The underlying property owner (holder of a MFE-CO) shall be responsible for ensuring that any mobile food establishment that operates on the property has a valid motor vehicle operator license, valid vehicle registration, proof of vehicle liability insurance, and a validly issued Texas Sales Tax Permit.

I. The underlying property owner (holder of a MFE-CO) shall be responsible for maintaining a log on a form prescribed by the Department of Community Development and Planning. It shall be unlawful for the holder of a MFE-CO to fail to record and maintain on said log the name and contact information of every mobile food establishment that has operated on the premises of the underlying property owner during the past and the corresponding dates of their operation. It shall be unlawful for the holder of a MFE-CO, or his representative, to fail to provide access to said logs upon request by a representative of the City of Arlington.

J. It shall be unlawful for a mobile food establishment to operate if the underlying certificate of occupancy holder is closed. If for any reason the underlying business must close its doors, all mobile food establishment operations must cease immediately.

K. It shall be unlawful for a mobile food establishment to remain on the premises of a MFE-CO holder for longer than 24 consecutive hours.

L. It shall be unlawful for a mobile food establishment to operate an electric generator on the premises of a MFE-CO holder. An approved electric line must be provided by the MFE-CO holder for use by a mobile food establishment. (Amend Ord 17-005, 2/14/17)

Section 4.15 <u>Indemnification</u>

REGISTRANTS UNDER THIS BUILDING CODE SHALL INDEMNIFY, WAIVE ALL CLAIMS, RELEASE, DEFEND AND HOLD HARMLESS THE CITY OF ARLINGTON AND ALL OF ITS OFFICIALS, OFFICERS, AGENTS, EMPLOYEES AND INVITEES, IN BOTH THEIR PUBLIC AND PRIVATE CAPACITIES, FROM ANY AND ALL LIABILITY, CLAIMS, SUITS, DEMANDS OR CAUSES OF ACTION, INCLUDING ALL EXPENSES OF LITIGATION AND/OR SETTLEMENT WHICH ARISE FROM OR RESULT FROM THE ISSUANCE AND EXERCISE OF A PERMIT ISSUED HEREUNDER PURSUANT

TO AN APPLICATION FROM A REGISTRANT, WHETHER SUCH CLAIMS AND/OR DAMAGES ARISE BY REASON OF INJURY OR DEATH OF ANY PERSON, OR FOR LOSS OF, DAMAGE TO OR LOSS OF USE OF ANY PROPERTY. SUCH INDEMNITY WILL APPLY WHETHER THE CLAIMS, SUITS, LOSSES, DAMAGES, CAUSES OF ACTION OR LIABILITY ARISE IN PART FROM THE NEGLIGENCE OF THE CITY OF ARLINGTON OR ANY OF ITS OFFICERS, OFFICIALS, AGENTS, EMPLOYEES AND INVITEES IN BOTH THEIR PUBLIC AND PRIVATE CAPACITIES WHETHER SUCH NEGLIGENCE IS CONTRACTUAL COMPARATIVE NEGLIGENCE, CONCURRENT NEGLIGENCE, JOINT NEGLIGENCE, GROSS NEGLIGENCE, ACTIVE NEGLIGENCE, PASSIVE NEGLIGENCE OR ANY OTHER FORM OF NEGLIGENCE. (Amend Ord 04-004, 1/13/04)

Section 4.16 <u>Permits for Demolition or Relocation</u>

Upon receiving an application for a permit to demolish or relocate a building or structure from a person or entity other than a state, city, county or federal government fee simple owner, the Building Official shall determine whether the building or structure is fifty (50) years old or older, or is situated in a Landmark Preservation Overlay ("LP") Zoning District. If the building or structure is fifty (50) years old or older, or the age of the building cannot be ascertained, the Building Official shall notify the applicant of such fact, and follow the procedures set out in Subsection A, below.

If the building or structure is situated in a "LP" Overlay District the Building Official shall notify the applicant of such fact, and follow the procedures set out in Subsection B, below. If the building or structure is less than fifty (50) years old and is not zoned with a "LP" Overlay suffix, the Building Official shall issue a demolition permit if all other requirements of the Code are met.

A. <u>Buildings or Structures that are Fifty (50) Years Old or Older, and Buildings or Structures of Unknown Age</u>

If the building or structure is fifty (50) years old or older, or the age of the building cannot be ascertained, the Building Official shall inform the applicant that the Landmark Preservation Commission or City Council must issue a Certificate of Demolition or Relocation, or the Municipal Court must issue an order before the Building Official may issue the requested permit. The Building Official shall direct the applicant to complete an Application for a Certificate of Demolition and Relocation for filing with the Landmark Preservation Commission, and forward the application to the Landmark Preservation Commission for its review and consideration.

Exception: Compliance with this section is not required upon receipt of an application for demolition or relocation for a structure that has been previously reviewed by the Landmark Preservation Commission in accordance with this chapter.

1. Automatic Stay of Thirty (30) Days. Demolition or relocation of the building or structure shall be automatically stayed for a period of up to thirty (30) days from the date of application to allow the Landmark Preservation Commission an opportunity to determine whether the building or structure is historically significant.

    a. If the building or structure is determined to be historically significant the Landmark Preservation Commission shall provide proper notice and hold a public hearing on the permit application.

    b. If the building or structure is determined not to be historically significant the Landmark Preservation Commission shall so notify the applicant and the Building Official as soon as is reasonably practicable.

2. Public Hearing. Within thirty (30) days of the receipt of a completed application for a Certificate of Demolition or Relocation, the Landmark Preservation Commission shall hold a public hearing. Public notice of such hearing setting forth the date, time and place scheduled for such hearing and the purpose thereof shall be published in a newspaper one time at least seven (7) days prior to the date scheduled for such hearing.

3. Certificate Deemed Issued by Lack of Action. If the Landmark Preservation Commission takes no action within thirty (30) days of receipt of the completed application, a Certificate of Demolition or Relocation shall be deemed issued by the Landmark Preservation Commission.

4. Review. In evaluating a request for a Certificate of Demolition or Relocation, the Landmark Preservation Commission shall consider the following:

    a. the architectural, cultural, or historical significance of the building or structure;

    b. the age of the building or structure;

c. the state of repair of the building or structure in question, and the reasonableness of the cost of restoration and repair;

d. additions, alterations, changes, modifications and updates to the exterior architectural features of the building or structure that would disqualify it from consideration for registration on the National Register of Historic Places;

e. the impact, if any, that delaying the demolition or relocation of the building or structure will have;

f. the contribution, if any, the building or structure makes to a previously designated and recognized historic district and the owner's or any predecessor owner's involvement in the formation or creation of such a district;

g. the willingness of the applicant to donate or sell the building or structure to a third party;

h. the potential usefulness or adaptive reuse of the building or structure, including economic usefulness;

i. the potential market or demand for such a building or structure in its current condition and location;

j. the purpose that would be served in preserving the building or structure; and,

k. all other factors it finds necessary and appropriate to carry out the intent of this ordinance.

5. Demolition or Relocation Appropriate. If the Landmark Preservation Commission determines that the building or structure should be demolished or removed, the Building Official shall issue a demolition permit if all other requirements of the Code are met.

6. Demolition or Relocation Inappropriate. If the Landmark Preservation Commission determines that the building or structure should not be demolished, the Landmark Preservation Commission may extend the automatic stay for a period of up to thirty (30) additional days. The automatic stay and any additional stay imposed by the Landmark Preservation Commission shall not exceed a total of sixty (60) days from

the date application for a permit to demolish or relocate a building or structure was filed.

7. Stay Extended by City Council. Prior to the expiration of the stay period imposed by the Landmark Preservation Commission, the Landmark Preservation Commission may issue a recommendation to the City Council requesting that the stay be extended. After notice to the applicant and a public hearing, the City Council may extend the stay upon a finding that there are reasonable grounds for preservation as well as a reasonable expectation of preserving the building or structure. It shall be the responsibility of the Landmark Preservation Commission and any other proponent of extending the stay on a demolition permit application to demonstrate to the City Council's satisfaction that there exist reasonable grounds for preservation as well as a reasonable expectation of preserving the building or structure.

The City Council may extend the stay on one or more occasions, after notice to the applicant and a public hearing, in such increments of time as the City Council may determine reasonable. Any extension of the stay on a demolition permit or combination of extensions imposed by the City Council under this provision shall not exceed a cumulative total of ninety (90) days in duration.

In instances where the City Council imposes an extension of the stay for a time period of less than ninety (90) days, the Landmark Preservation Commission may request additional extensions of the stay up to a cumulative total of ninety (90) days from the City Council. Any such request must be submitted to, and acted upon by, the City Council prior to the expiration of any stay period previously imposed by the City Council. The Landmark Preservation Commission shall report to City Council concerning its efforts to preserve the building or structure as a prerequisite to the extension of any stay imposed by the City Council.

In no event shall the stay on a demolition permit and any extensions thereto exceed a total of one hundred fifty (150) days from the date the application for a permit to demolish or relocate a building or structure was filed. If City Council takes no action on the Landmark Preservation Commission's request for an extension within the original stay period or any subsequent extension thereof, a Certificate of Demolition or Relocation shall be deemed issued at the expiration of such stay period.

8. Appeals. Appeals from a decision of the Landmark Preservation Commission shall be to the City Council. Such appeals must be filed with the Historic Preservation Officer within ten (10) days after the complained of decision is made by the Landmark Commission. Such appeals shall be heard by City Council on the next available agenda consistent with the requirements of the Texas Open Meetings Act and with due consideration for the City Council's schedule of business.

9. Permit Issuance. At the end of the stay period and any extension thereof, or upon the City Council's granting an appeal to the Landmark Preservation Commission's determination the Building Official shall issue a demolition permit if all other requirements of the Code are met.

B. Buildings or Structures in a Landmark Preservation Overlay ("LP") Zoning District

If the building or structure is situated in a "LP" Overlay District the Building Official shall inform the applicant that the Landmark Preservation Commission or City Council must issue a Certificate of Demolition or Relocation, or the Municipal Court must issue an order before the Building Official may issue the requested permit. The Building Official shall direct the applicant to complete an Application for a Certificate of Demolition and Relocation for filing with the Landmark Preservation Commission, and forward the application to the Landmark Preservation Commission for its review and consideration.

The Landmark Preservation Commission or City Council must issue a Certificate of Demolition or Relocation, or the Municipal Court must issue an order before the Building Official may issue a permit to demolish or relocate a building or structure situated in a "LP" Overlay District. The Certificate of Demolition or Relocation process, which must be followed, is set out in Section 9-600 of the Zoning Chapter of the Code of the City of Arlington, Texas. In addition to obtaining a Certificate of Demolition or Relocation from the Landmark Preservation Commission or City Council the applicant must meet all other requirements of the Code before the Building Official shall issue a demolition permit.

C. Buildings or Structures that are NOT Located in a Landmark Preservation Overlay ("LP") Zoning District and which are Less Than Fifty (50) Years Old

If the age of a building or structure can be ascertained and the building is less than fifty (50) years old and the building or structure is not zoned with a "LP" Overlay suffix the Building Official shall issue a demolition permit if all other requirements of the Code are met. (Amend Ord 04-004, 1/13/04)

ARTICLE V

REQUIRED FEES

Section 5.01 Standards

A. The various requirements contained in this Building Code for the payment of fees shall correspond to the methods of calculation and restrictions contained herein and shall be calculated in accordance with such schedules as may from time to time be set by resolution of the City Council.

B. The following standards shall apply:

(1) Calculations for area (square footage) shall be on a gross basis, measured from the exterior face of exterior walls;

(2) Final permit fee calculations shall be carried to the nearest whole dollar. Fractions greater than forty-nine one hundredths (0.49) shall be extended upward;

(3) The Building Official shall designate the applicable method of calculation for occupancies;

(4) The Building Official may approve a mixed calculation method when differing occupancy descriptions are applied to various areas within a single structure;

(5) "Valuation" shall be the estimate of the total market value of a proposed construction project, including the contractor's overhead and profit and other associated owner's costs, but excluding raw land costs; and

(6) When replacement of a contractor occurs during a project, the Building Official may prorate the amount of the building permit fee for the new contractor based on said Building Official's determination of the percentage of work remaining.

(7) Except where specifically listed in the resolution adopting fees, no building permit fee shall be less than the minimum required plans examining fee. (Amend Ord 89-76, 6/27/89)

ARTICLE VI

MANUFACTURED HOUSING AND INDUSTRIALIZED HOUSING AND BUILDINGS

Section 6.01 Definitions. The following terms shall have the meanings as set forth in this section:

"Building Official" shall mean the legally designated inspection authority of the City or his/her authorized representative.

"City" shall mean City of Arlington, Tarrant County, Texas.

"HUD-code manufactured home" shall mean a structure constructed on or after June 15, 1976, according to the rules of the United States Department of Housing and Urban Development; built on a permanent chassis; designed for use as a dwelling with or without a permanent foundation when the structure is connected to the required utilities; transportable in one or more sections; and in the traveling mode, at least eight body feet in width or at least 40 body feet in length or, when erected on site, at least 320 square feet.

HUD-code manufactured home includes the plumbing, heating, air conditioning, and electrical systems of the home.

HUD-code manufactured home does not include a recreational vehicle as defined by 24 C.F.R. Section 3282.8(g).

"Industrialized Housing" shall mean a residential structure that is designed for the occupancy of one or more families; constructed in one or more modules or constructed using one or more modular components built at a location other than the permanent site; and designed to be used as a permanent residential structure when the module or the modular component is transported to the permanent site and erected or installed on a permanent foundation system.

Industrialized housing includes the structure's plumbing, heating, air conditioning, and electrical systems.

Industrialized housing does not include a residential structure that exceeds three stories or 49 feet in height; housing constructed of a sectional or panelized system that does not use a modular component; or a ready-built home constructed in a manner in which the

entire living area is contained in a single unit or section at a temporary location for the purpose of selling and moving the home to another location.

"Industrialized Building" shall mean a commercial structure that is constructed in one or more modules or constructed using one or more modular components built at a location other than the commercial site; and designed to be used as a commercial building when the module or the modular component is transported to the commercial site and erected or installed.

An industrialized building includes the structure's plumbing, heating, air conditioning, and electrical systems.

An industrialized building includes a permanent commercial structure and a commercial structure designed to be transported from one commercial site to another commercial site but does not include a commercial structure that exceeds three stories or 49 feet in height; or a commercial building or structure that is installed in a manner other than on a permanent foundation; and either not open to the public; or less than 1,500 square feet in total area and used other than as a school or a place of religious worship.

"Manufactured home" or **"manufactured housing"** shall mean a HUD-code manufactured home or a mobile home.

"Mobile home" shall mean a structure constructed before June 15, 1976; built on a permanent chassis; designed for use as a dwelling with or without a permanent foundation when the structure is connected to the required utilities; transportable in one or more sections; and in the traveling mode, at least eight body feet in width or at least 40 body feet in length or, when erected on site, at least 320 square feet.

Mobile home includes the plumbing, heating, air conditioning, and electrical systems of the home.

Section 6.02 <u>Permits for Industrialized Housing and Buildings</u>

To erect or install industrialized housing or industrialized building and before any construction may commence a building permit must first be issued in accordance with the provisions of Article IV of this chapter. In addition to the permit requirements of Article IV, the building permit application must include:

1. Two (2) complete sets of designs, plans, and specifications bearing the Texas Industrialized Building Code Council's stamp of approval for each installation of industrialized housing or building.

2. Plans that demonstrate that the industrialized building or industrialized housing be securely fixed to a permanent foundation.

3. Permit applications for single family or duplex Industrialized Housing must include:

   a. Documentation verifying that industrialized housing must have a value equal to or greater than the median taxable value for each single-family dwelling located within 500 feet of the lot on which the industrialized housing is proposed to be located, as determined by the most recent certified tax appraisal roll for Tarrant county;

   b. Plans that demonstrate the exterior siding, roofing, roofing pitch, foundation fascia, and fenestration is compatible with the single-family dwellings located within 500 feet of the lot on which the industrialized housing is proposed to be located;

   c. Plans that demonstrate compliance with the residential design standards, building setbacks, side and rear yard offsets, architectural landscaping, square footage, and other zoning and site requirements applicable to one- and two-family dwellings; and

   d. For purposes of subsection “a” above, “value” means the taxable value of the industrialized housing and the lot after installation of the housing.

4. The installation of an industrialized building or industrialized housing must demonstrate compliance with the all land use and zoning requirements, commercial design standards, building setback requirements, side and rear yard requirements, and all elements of *Commercial Site Plan* as set forth in Article IV of this chapter.

5. Each industrialized modular section or modular component must bear a decal or insignia as approved by the Texas Industrialized Building Code Council.

Section 6.03 <u>Permits for Manufactured Housing, HUD Code Manufactured Homes and Mobile Homes</u>

A. The installation of a mobile home for use as a dwelling is prohibited. The prohibition is prospective and does not apply to a mobile home previously legally permitted by and used as a dwelling in the City.

B. Where a manufactured home occupies a lot, the owner of the manufactured home may remove the manufactured home from its location and place another manufactured home on the same property. The replacement manufactured home must be a newer manufactured home and must be at least as large in living space as the prior manufactured home. This replacement is limited to a one time replacement. Not more than twelve months shall lapse between the time of the removal and the time of replacement. It shall be the owner's responsibility to prove the removal date and the age and size of the removed manufactured home.

C. An owner shall be allowed to replace a manufactured home that has been destroyed as a result of a fire or natural disaster. Not more than twelve months shall lapse between the time of the removal and the replacement. It shall be the owner's responsibility to prove the date of the fire or natural disaster that destroyed the manufactured home.

D. An owner shall be granted permission to replace a mobile home by a HUD-code manufactured home. This replacement is limited to a one time replacement. Not more than twelve months shall lapse between the time of the removal and the time of replacement. It shall be the owner's responsibility to prove the removal date and the age of the removed mobile home.

E. To install, replace, place or set up, any manufactured housing and before any related site construction may commence a "Manufactured Home Site Placement Review" must first be issued in accordance with the permitting provisions of Article IV of this chapter. A "Manufactured Home Site Placement Permit" application to replace or place manufactured housing for use as a dwelling shall be considered to be granted unless the application is denied in writing accompanied by the reasons for the denial not later than the 45th day after the completed application is received.

An application for "Manufactured Home Site Placement Permit" to place manufactured housing on any site is subject to the following:

1. The scope of the "Manufactured Home Site Placement Permit" shall include:

a. General site preparation work for other than the localized site and foundation preparation for the manufactured housing unit,

b. Site electrical work and connection to the manufactured housing unit,

c. Installation of air conditioning equipment at the site and connection to the manufactured housing unit,

d. The connection to water and sewer services at the site and connection to the manufactured housing unit,

e. The installation of skirting around and connection to the manufactured housing unit if that cost is excluded from the installers cost,

f. The setbacks from property lines,

g. The surface improvement of the drive approaches and internal driveways,

h. The setback from any future rights of way based on the thoroughfare development plan,

i. The location of the manufactured housing in regard to easements, and

j. The location of the manufactured in regard to flood plain hazards.

2. The scope of the "Manufactured Home Site Placement Permit" shall not include the installation of the manufactured housing unit which includes the immediate site preparation of the manufactured housing unit(s), the foundation system, the joining/connection of the manufactured housing units, placement of the manufactured home on the foundation, and the installation of steps or legally compliant ramps to any exterior door that will be 12 inches or more above ground level.

3. The transporting and installation of the manufactured housing unit(s) must be performed by a retailer or installer that is licensed by the Texas Department of Housing & Community Affairs, Manufacture Housing Division.

4. The "Manufactured Home Site Placement Permit" may only be issued to a retailer or installer that is licensed by the Texas Department of Housing & Community Affairs, Manufacture Housing Division.

5. Upon application for the "Manufactured Home Site Placement Permit" the owner must pay a fee as established by resolution of the City Council.

6. The placement or replacement of the manufactured home is subject to inspections as required by the building official.

Section 6.04 <u>Electronic documents required</u>

Final plans or other documents that will be archived must be submitted in an electronic format specified by the Director of Community Development and Planning ("CDP Director") as a condition to issuance of any type of permit, approval, or other action related to the final plans or documents. The City may provide an electronic conversion service for a fee in the amount set forth by City Council resolution. The CDP Director shall provide a schedule indicating which documents must be provided electronically, at which point during the approval process, and other information as necessary to implement an electronic archiving program. (Amend Ord 12-020, 4/24/12)

ARTICLE VII

SIGNS

Section 7.01 Permits Required

A. No sign shall hereafter be erected, constructed, altered or maintained except as provided in this Building Code until a permit for the same has been issued by the Building Official and a permit fee paid as hereinafter provided.

B. No sign permit shall be issued and no sign erected unless and until the applicant has complied with the requirements of registration described in Article IV of this Chapter and has paid the appropriate fee therefor.

Section 7.02 Identification of Signs

Every sign hereafter erected, constructed or maintained for which a permit is required shall be plainly marked with the name of the person, firm or corporation erecting and maintaining such sign. (Amend Ord 96-93, 7/2/96)

Section 7.03 Unsafe Signs

Should any sign become insecure or in danger of falling or otherwise become unsafe in the opinion of the Building Official, the owner thereof or the person or firm maintaining the same shall, upon written notice from said Building Official, immediately in the case of immediate danger and in any case within ten (10) days of the date of such notice, either secure the same in a manner to be approved by the Building Official in conformity with the provisions of this Building Code or remove such sign. If such order is not complied with within ten (10) days, the Building Official shall remove such sign at the expense of the owner or lessee thereof.

Section 7.04 Maintenance

All signs for which a permit is required, together with all their supports, braces, guys and anchors, shall be kept in good repair. The Building Official may order the removal of any sign that is not maintained in accordance with the

provisions of this Section. Such removal shall be accomplished at the expense of the owner or lessee. (Amend Ord 96-93, 7/2/96)

Section 7.05 <u>Unlawful Signs</u>

A. A sign, which is installed, erected or constructed in violation of any Chapter of the Code of the City of Arlington, is hereby declared to be a nuisance. (Amend Ord 98-141, 10/27/98)

B. The Building Official may abate an unlawful sign in accordance with the procedures set forth in Sections 4.03 and 4.04 of the "Nuisances" Chapter.

C. The Building Official may remove and dispose of any sign which is in violation of Subsections 7.06(E) or (F), without prior notice to the owner of such sign. (Amend Ord 94-03, 1/4/94)

Section 7.06 <u>Location Restrictions</u>

Except where authorized elsewhere in the City Code, no sign shall be erected, constructed or maintained: (Amend Ord 96-93, 7/2/96)

A. In violation of any provision of the "Zoning" Chapter of the Code of the City of Arlington, or any other Chapter of said Code which pertains to the sign's location or manner of construction;

B. So as to obstruct any fire escape, window, door or other opening used as a means of egress or as legally required ventilation;

C. On or attached to a fire escape;

D. On or attached to any door or window casing;

E. On or over any street, alley, park, light standard, utility pole, fire hydrant or other object or structure situated on public property: provided, however, that this provision shall not be construed as prohibiting the erection of signs by the City of Arlington for the purpose of identification, direction or information concerning traffic control;

F. With any structural support thereof on or within any street right-of-way, parkway, alley, public sidewalk, park or other public property; or

G. So as to project into any area within twenty-four inches (24") of the back of the street curb or edge of a roadway.

Section 7.07 <u>Structural Requirements</u>

A. <u>Design and Stress Diagrams Required</u>. Before a sign permit shall be granted, the applicant therefor shall submit to the Building Official a design and stress diagram or plan containing information as to the type, size, shape, location, construction and materials of the proposed sign, and such other pertinent information as the Building Official may deem necessary to determine that such sign complies with this Building Code and all other pertinent laws. Final plans or other documents that will be archived must be submitted in an electronic format specified by the Director of Community Development and Planning ("CDP Director") as a condition to issuance of any type of permit, approval, or other action related to the final plans or documents. The City may provide an electronic conversion service for a fee in the amount set forth by City Council resolution. The CDP Director shall provide a schedule indicating which documents must be provided electronically, at which point during the approval process, and other information as necessary to implement an electronic archiving program. (Amend Ord 10-009, 1/12/10)

B. <u>Wind Pressure</u>. In the design and erection of all signs, the effect of wind shall be carefully considered. All signs shall be so constructed as to withstand wind pressure as specified in I.B.C., Section 1609.

C. <u>Working Stresses</u>.

(1) In any sign construction, the allowable working stresses shall conform to the requirements of I.B.C., Section 1604.

(2) The allowable working stresses for steel and wood shall be calculated in accordance with the pro-

visions of I.B.C., Sections 2204 and 2304 - 2306, respectively.

(3) The working strength of chains, cables, guys or steel rods shall not exceed one-fifth (1/5) of the ultimate strength of such chains, cables, guys or steel rods. (Amend Ord 02-020, 2/5/02)

Section 7.08 <u>Use of Plastic Materials</u>

Other provisions of this Building Code notwithstanding, plastic materials which burn at a rate no faster than 2.5 inches per minute (64mm/s) when tested in accordance with ASTM D 635 shall be deemed approved plastics and may be used as the display surface material and for the letters, decorations and facings on signs and their structures. (Amend Ord 02-020, 2/5/02)

Section 7.09 <u>Presumption - Violations In or On Public Property</u>

A. If any sign of any nature is erected, constructed or maintained in violation of Section 7.06 (E) or (F), including but not limited to garage sales, neighborhood sales, moving services, baby-sitting services, housekeeping services, lawn care services or any other type of service or sales:

1. When the name of any person appears on such a sign, it shall be prima facie evidence that the person so named is responsible for the offense of erecting, constructing or maintaining said sign, and that person shall be guilty of a misdemeanor;

2. When any address appears on such sign, it shall be prima facie evidence that the record property owner at the address so specified is responsible for the offense of erecting, constructing or maintaining said sign, and that person shall be guilty of a misdemeanor; and

3. In the event that such a sign contains no identifying information other than a telephone number, such information shall be prima facie evidence that the record property owner at the address so specified is responsible for the offense of erect-

ing, constructing or maintaining said sign, and that person shall be guilty of a misdemeanor.

B. Proof establishing a prima facie case based on name, address or telephone number may be made as follows:

1. Name - An authenticated photograph of the sign showing the name of the person allegedly responsible, or the sign itself.

2. Address - A certified copy of that section of the most recent tax roll which shows the name and address of the record property owner and an authenticated photograph of the sign or the sign itself.

3. Telephone Number - An authenticated photograph of the sign or the sign itself, showing the telephone number, and a copy of the most recent telephone directory showing the listing, or a letter or other document from the telephone company showing the listed person and address at that telephone number. (Amend Ord 94-03, 1/4/94)

Section 7.10 <u>Temporary Signs Near Polling Places</u>

A. No temporary sign shall be placed, erected, constructed or maintained at a size greater than six (6) square feet in the area within the property lines of the property in which a polling place is located during the voting period, except as otherwise provided by state law. "Voting period" means the period beginning when a poll opens for early voting and election day voting and ending when the poll closes or the last voter has voted, whichever is later. (Amend Ord 08-090, 9/30/08)

B. Signs shall not be located in City right-of-way.

C. Temporary signs need not comply with the provisions of Section 7.07 of this Chapter. (Amend Ord 95-18, 2/14/95)

ARTICLE VIII

SIDEWALKS, CURBS AND DRIVEWAYS

Section 8.01 Registration

Registration shall be required of anyone in the business of laying, constructing, building, rebuilding or repairing any length of sidewalk, curb, street gutter or driveway on any public right-of-way within the City of Arlington unless such work is done pursuant to a contract executed with said City. An applicant for registration shall comply with the requirements for registration as described in Section 4.01 above.

Section 8.02 Permits

A. Permit Required. No work described in Section 8.01 above shall proceed in any measure until a permit to do such work has been issued by the Building Official, unless such work is done pursuant to a contract executed with the City of Arlington.

B. To Whom Issued. A permit for such work shall only be issued to a person, firm or corporation duly registered for that work as provided in Section 8.01 above, except as approved by the Director of Capital Improvements.

C. Permit Application. An application for a permit to perform the work described in Section 8.01 above shall be submitted to the Building Official. The application shall include the required information set out in Article IV above.

D. Permit Issued. When, in the opinion of the Building Official, the data submitted in the application for the permit sufficiently defines the proposed work, and when the appropriate fee has been paid, the permit shall be issued.

Section 8.03 Performance

All work permitted under this Article shall be inspected for approval by the Building Official, and it shall be an offense for any permittee to fail to contact said Building Official for such inspection upon completion of the work. All such work shall conform to all applicable provisions of the Code of the City of Arlington. (Amend Ord 89-76, 6/27/89)

ARTICLE IX

FENCES

Section 9.01 Barbed Wire Fence

It shall be unlawful for any person, firm, corporation or agent or employee thereof to build, erect, keep, maintain, permit or allow to be built, erected, kept or maintained, any barbed or razor wire fence on or around any property or premises owned or controlled by such person, firm or corporation within the corporate limits of the City of Arlington: provided, however, that any fence, including topgrade construction barbed or razor wire, the lowest strand of which is not less than six and one-half feet (6½') above the ground level, shall be permitted. (Amend Ord 96-93, 7/2/96)

Section 9.02 Enclosure of Swimming Pools, Spas and Hot Tubs

A. The following are required to comply with the most current edition of the Pool Yard Enclosure Requirements, Texas Health and Safety Code:

1. A pool owned, controlled, or maintained by the owner of a multi-unit rental complex or by a property owners association; and

2. Doors and windows of rental dwellings opening into the pool of a multi-unit rental complex or condominium, cooperative, or a townhome project.

B. Construction Requirements For Existing Swimming Pools

1. Every outdoor swimming pool, spa and hot tub shall be completely enclosed by a fence or wall at least forty-eight inches (48") above grade measured on the side of the fence or wall which faces away from the swimming pool.

2. Every fence or wall required by this Section shall be constructed so that it contains no openings, holes or gaps, except doors or gates, which will allow the passage of a sphere four inches (4") in diameter.

3. Every door or gate that forms a part of a fence or wall required by this Section shall be constructed so that it contains no openings, holes or gaps which will allow the passage of a sphere four inches (4") in diameter.

4. A building may be used as part of a fence or wall required by this Section. No **door** of such building shall open directly into the enclosed area except as herein provided.

5. It is an exception to Subsection (A)(4) that the door:

   a. Provides the only access into a nonhabitable storage or equipment room or building; or

   b. Is to a single-family dwelling and is in compliance with Subsection (B).

C. Self-closing and Self-latching Devices on Existing Swimming Pools

1. All gates or doors opening into the enclosed area shall be equipped with a self-closing and self-latching device for keeping the gate or door securely closed at all times when not in actual use.

2. The application of this subsection shall not include sliding glass doors.

3. It is an exception to this subsection that the door or gate provides the only access into a nonhabitable storage or equipment room or building.

D. Application of Requirements

1. The requirements of Subsections (B) or (C) shall be applicable to all outdoor swimming pools, spas and hot tubs constructed or installed prior to the adoption of the 1991 U.B.C. in Article I of this Chapter and which have a depth capacity of eighteen inches (18") or more of fluid at any point, whether actually containing a fluid or empty.

2. Outdoor swimming pools, spas and hot tubs, whose construction or installation was completed prior

to May 1, 1990, and which are located at occupancies other than hotels, motels, lodges and apartment houses, shall not be subject to the provisions of this ordinance requiring doors to a building that forms part of an enclosure to be equipped with self-closing and self-latching devices.

E. Modifications

The Building Code Board of Appeals may make modifications in individual cases, upon a showing of good cause, with respect to the height, nature of location of the fence, wall, gates or latches, or the necessity therefor, provided the protection as sought hereunder or by Appendix G of the 2000 I.R.C. is not reduced thereby. Said Board may permit other protection devices or structures to be used so long as the degree of protection afforded by the substitute devices or structures is not less than the protection afforded by the substitute fence, gates and latch described herein, or in Appendix G of the 2000 I.R.C. as applicable. (Amend Ord 02-020, 2/5/02)

F. Definition

The terms "swimming pool", "spa" and "hot tub" as used herein, shall mean an artificial or semi-artificial receptacle or container designed to contain fluid, whether actually containing a fluid or not, which is either temporarily or permanently located outdoors, and is used or intended to be used for public, semi-public or private human use involving submersion of all or part of the body, whether or not a fee is paid for such use. Such use may include, but is not limited to, swimming, wading, soaking, floating or recreational bathing by any number of persons. These terms do not apply to a receptacle or container that is located outdoors and is not used or intended to be used for public, semi-public or private human use involving submersion of all or part of the body, such as fountains and reflections pools.

G. Offense

1. It is an offense if a person owns, occupies, maintains or is in charge of premises that are in violation of this Section.

2. There shall be no requirement of a culpable mental state for a violation of this Section or Appendix G, 2000 I.R.C. (Amend Ord 02-020, 2/5/02)

ARTICLE X

EMERGENCY LOCATOR DIRECTORY

Section 10.01 Purpose

The provisions of this Article are enacted for the purpose of avoiding delay to police, fire, ambulance and other emergency personnel in locating and responding to calls at individual living units within large multi-unit residential complexes in the City of Arlington, in order to insure the health, safety, morals and general welfare of the public.

Section 10.02 Filing of Information Required

The owner, manager or person in control of any apartment or other building or building complex designed or used for an occupancy of ten (10) or more dwelling units at the same location shall file in the office of the Building Official the information required in Section 10.04 below, which shall be compiled and maintained by the Building Official in an emergency locator directory. Allowing the continued use and operation of said premises after the time specified in Section 10.03 below has elapsed without the filing or updating of such information shall be an offense.

Section 10.03 Time of Filing

A. Existing Structures. The owner, manager or person in control of any apartment or other building or building complex containing ten (10) or more dwelling units at the same location which are in existence and occupied under a valid Certificate of Occupancy on the effective date of this Article shall comply with the terms of this Article within ninety (90) days after said effective date.

B. New Construction, Alterations or Additions. The owner, manager or person in control of any apartment or other building or building complex which may, after the effective date of this Article, be constructed, altered, enlarged or expanded so as to contain ten (10) or more dwelling units at the same location shall comply with the terms of this Article as a condition precedent to approval following the final inspection

and/or issuance of a Certificate of Occupancy by the Building Official for all or any part of said premises. Compliance with this Article shall be deemed to mean the filing of the information herein required with regard to all dwelling units at the same location, regardless of whether all such units constitute the subject of the final inspection or Certificate of Occupancy being sought.

C. Changes in Information. In the event that any of the information required by Section 10.04 below changes or is rendered incomplete or inaccurate, it shall be the duty of the owner, manager or person in control of the premises involved to submit to the Building Official a written statement indicating the correct information in order that the emergency locator directory shall be maintained factually correct at all times. Failure to update said information within ten (10) days of the change shall be an offense.

Section 10.04 Information Required

A. The information required to be filed with the Building Official by Section 10.02 above shall include a site map drawn to a scale designated by the Building Official showing the designation and location of the following: buildings; the number or letter designation of said buildings, if any; internal street and driveway patterns; parking areas; access ways to interior courts; exterior stairways; dwelling units and their exterior doorways; the number or letter designation of said units; utility controls; and such other pertinent information as the Building Official may deem necessary. The Building Official shall provide appropriate forms for the compiling of said information and shall prescribe the manner of submitting the same.

B. Final plans or other documents that will be archived must be submitted in an electronic format specified by the Director of Community Development and Planning ("CDP Director") as a condition to issuance of any type of permit, approval, or other action related to the final plans or documents. The City may provide an electronic conversion service for a fee in the amount set forth by City Council resolution. The CDP Director shall provide a schedule indicating which documents must be provided electronically, at which point during the approval process, and other information as necessary to implement an electronic archiving program. (Amend Ord 10-009, 1/12/10)

ARTICLE XI

TEMPORARY OCCUPANCY OF STREETS

Section 11.01 General

A. Permit. Any person desiring to temporarily occupy any portion of any public street, alley, sidewalk or public right-of-way within the City of Arlington for:

(1) the purpose of placing thereon material or debris for or from building operations;

(2) any excavation of any area under such street, alley or sidewalk; or

(3) any purpose whatsoever connected with the erection, removal, alteration or repair of any building or other structure;

shall apply to the Building Official for a permit under Article IV above for such temporary occupation. Such permit shall not be issued unless the applicant therefor shall have first presented a valid building permit issued by the Building Official for adjacent premises.

It shall be unlawful to occupy or obstruct any such street, alley, sidewalk or public right-of-way without such a permit conditioned that the permittee will: discharge all claims of every character arising from or occasioned by such occupancy, the construction or repair of such building or the making of such excavation; and discharge all judgments obtained, together with all costs attached thereto, against the City by reason of any such claim, injury or damage sustained.

Every person, firm or corporation carrying on any such excavation or building operation shall keep all streets, alleys, sidewalks and public rights-of-way adjacent to such excavations or building operations in a clean and orderly condition and free from obstructions not allowed by this Article during such operations. At the expiration of the time stipulated in the permit, the permittee shall have restored all such streets, alleys, sidewalks and public rights-of-way to as good condition as they were before the beginning of such operations.

B. Requisites of Permit. Permits for temporary street occupancy shall be issued by the Building Official, shall be in writing and shall be for such a period of time, not to exceed ninety (90) days, as the Building Official may deem expedient: provided, however, that such time may be extended by the Building Official based on evidence supporting a request for such extension. The Building Official may consult with other departments of the City of Arlington which may be affected by or interested in the permit, and shall specify in each permit issued the extent of street, side-

walk, alley or public right-of-way allowed to be obstructed, the manner of barricade system that is to be provided and any reasonable restrictions deemed necessary by the Building Official. If refusing a permit application, the Building Official shall notify the applicant for the permit as to the reason the permit is not to be granted and such temporary occupancy not allowed.

C. Fee. The appropriate fee for temporary occupancy set in accordance with Section 4.09 above shall be required along with submission of the permit application to the Building Official. (Amend Ord 89-76, 6/27/89)

ARTICLE XII

SANITARY FACILITIES

Section 12.01 Sanitary Sewer Connection During Construction

Adequate sanitary facilities for the convenience of all construction personnel shall be provided by the contractor during any construction performed in the City of Arlington. These facilities shall be kept in a clean and sanitary condition throughout the duration of the work. The temporary sanitary facilities shall be enclosed, screened, weatherproofed and connected to a sewer. Upon removal of the temporary facilities, the sewer connection shall be removed and suitably capped. (Amend Ord 96-93, 7/2/96)

Section 12.02 Alternative Sanitary Facilities During Construction

In lieu of connecting to a sewer, the temporary facility required by this Article may be a portable, enclosed, chemically treated, tank-tight unit as approved by the Building Official. (Amend Ord 89-76, 6/27/89)

ARTICLE XIII

TEMPORARY OUTDOOR EVENTS

Section 13.01 Purpose

The purpose of this Chapter is to promote the health, safety, and welfare of City of Arlington citizens and visitors by addressing issues that occur when private property is used for temporary outdoor events.

Section 13.02 Definitions

The following words, terms and phrases, when used in this Ordinance, shall have the meanings ascribed to them in this section, except where the context clearly indicates a different meaning:

Administrator. The Building Official or other designee of the City Manager charged with the administration and enforcement of this Article.

Amplified Sound. Music, speech or sound projected or transmitted by artificial means, including but not limited to amplifiers, loud speakers or any similar devices that emit sound distinctly discernible beyond the property line of the premises where the equipment is located.

Appeal Officer. The Director of Community Development and Planning or other designee of the City Manager charged with hearing appeals related to the enforcement of this Article.

Applicant. A person or its authorized agent that applies for a temporary outdoor event permit.

Non-Seasonal Temporary Outdoor Event. A temporary outdoor event that occurs independently of a particular season of the calendar year, including but not limited to: events related to religious institutions, schools, or other non-profit organizations.

Person. An individual, proprietorship, partnership, corporation, association, or other legal entity.

Seasonal temporary outdoor event. A temporary outdoor event occurring at or dependent on a particular season or holiday of the calendar year, including but not limited to: pumpkin stands, firewood sales, and Christmas tree lots.

Temporary outdoor event. Any activity not located within a permanent structure involving amplified sound; erection of tents; or sales of merchandise, goods or food and beverage; or similar activity.

Section 13.03 <u>General Authority and Duty of the Administrator</u>

The Administrator shall implement and enforce this Chapter.

Section 13.04 <u>Permit Required</u>

A. No person or applicant may direct, control or participate in the production of a temporary outdoor event unless a valid permit for the event has been issued as provided in this Article.

B. No person or applicant may direct, control or participate in the production of temporary outdoor event in violation of the terms and conditions of a valid permit issued in accordance with this Article.

C. Nothing contained herein shall be construed as relieving an applicant from duties or permits required by other provisions of the Code of the City of Arlington, including, but not limited to, ordinances regulating the sale of food and beverage or closure of streets and the obtaining of permits and payment of fees. (Amend Ord 17-005, 2/14/17)

Section 13.05 <u>Application for Permit</u>

A. A person desiring to hold a temporary outdoor event shall file a written permit application with the Administrator.

B. The application must be filed at least forty-five (45) days before the day the temporary outdoor event is to be held. Failure to meet the filing requirement may result in denial of the application. This requirement may be waived by the Administrator if all other conditions of this Article are met.

C. The Administrator may require submittal of the following:

1. The name, telephone numbers and address of the applicant and the names, addresses, and telephone numbers of all associates and employees of the applicant assisting in the promotion of the temporary outdoor event.

2. A description and the address of the premises where the temporary outdoor event is to be held.

3. The name and address of the owner of the premises where the temporary outdoor event is to be held and a letter of permission from the owner whereby the applicant is authorized to use the location.

4. A letter from the owner(s) of the premises acknowledging responsibility for cleaning up the property and surrounding rights-of-way as may be applicable, including charges assessed by the City for expenses incurred by the City. A bond for clean up may be required by the City. The owner shall provide an address and telephone numbers where he or she may be contacted.

5. The dates and times that the temporary outdoor event is to be held, including any setup or takedown time for tents, booths, tables, stages, bandstands, platforms or other temporary structures.

6. The maximum number of persons that the applicant will allow to attend the temporary outdoor event and a statement showing how the applicant plans to control the number of persons in attendance at the temporary outdoor event.

7. A detailed statement describing the applicant's preparations for the temporary outdoor event designed to comply with the minimum standards of sanitation and health protection measures required by V.T.C.A., Health and Safety Code, Chapter 341, to include but not be limited to restrooms, gratis drinking water and shade structures. In addition, provisions for emergency medical and health care services may be required by the City.

8. A detailed statement describing the applicant's preparations for the temporary outdoor event designed to comply with the standards for a Certificate of Occupancy and all other requirements of the applicable Chapters of the Code of the City of Arlington, including but not limited to the provisions of the "Fire Prevention" and "Zoning" Chapters of said Code.

9. A complete listing of similar temporary outdoor events the applicant has received permits for in the past three (3) years, including the date, time, and location of each.

10. Any other information to determine whether the event will jeopardize the health, safety, and welfare of City of Arlington citizens and visitors.

D. The required filing fee set in accordance with Section 4.09 above must be submitted with the application. The fee shall be nonrefundable.

Section 13.06 <u>Application Review Procedure</u>

A. The application for a permit under this Article shall be reviewed by the Administrator. Such application may also be reviewed by other departments of the City to check compliance with the laws and ordinances under their jurisdiction.

B. Reviewing departments may make a written report to the Administrator. The report shall state whether the preparations described in the application, if carried out, would be sufficient to protect the community and the persons attending the temporary outdoor event from health dangers, public safety and traffic control hazards, and to avoid violations of V.T.C.A., Health and Safety Code, Chapter 341.

Section 13.07 <u>Conditions for Permit</u>

A. The following conditions and restrictions shall apply to all temporary outdoor events:

1. Temporary outdoor sale or distribution of merchandise, goods or food and beverage shall only be conducted by the existing occupants of existing businesses on the property where the sales will be held. The merchandise, goods or food and beverage sold or distributed shall be limited to those items sold or distributed in the ordinary course of business at the location for which a Certificate of Occupancy has been issued.

2. The Administrator may impose restrictions on any activity that appears likely to create a risk of unreasonable harm to the public including the

following: fires; fireworks; amplified sound; the use of alcoholic beverages; dancing; sports; the use of animals, equipment or vehicles; the number of persons to be present; or the location of any bandstand, platform, tent or stage.

3. If an event takes place on public property, including street right-of-way, the applicant shall carry a minimum of $500,000 per occurrence in commercial general liability insurance naming the City of Arlington, their officers, agents, and employees as additional insured for claims occurring in City rights-of-way. The applicant shall also pay a reasonable deposit of Security or provide a bond for the repair of any damage to City of Arlington property, the cost of cleanup, or both when so determined by the City.

4. The applicant shall furnish additional sanitary and refuse facilities that might be reasonably necessary based on the use or activity for which the permit is being sought.

5. Any tents, booths, tables, stages, bandstands, platforms or other temporary structures must be set back from the street curb by a minimum of twenty (20) feet, and must be within fifty (50) feet of the business front facade.

6. The number of temporary outdoor events that can be held by one applicant is limited to eighteen (18) per calendar year. The Administrator may allow an applicant to host additional temporary outdoor events if the event complies with this Article and does not jeopardize the health, safety, and welfare of the public.

B. In addition to the requirements in Subsection (A) above, the following conditions and restrictions shall apply to all seasonal temporary outdoor events:

1. The duration of the permit shall be for a period not exceeding forty (40) days prior to the event and two days after the event.

2. Tents, booths, tables, stages, bandstands, platforms or other temporary structures shall not be erected in any easements, fire lanes or required parking spaces.

C. In addition to the requirements in Subsection (A) above, the following conditions and restrictions shall apply to all non-seasonal temporary outdoor events:

1. The duration of the permit shall be limited to seventy-two (72) consecutive hours.

2. Tents, booths, tables, stages, bandstands, platforms or other temporary structures shall not be erected in any easements, fire lanes or required parking spaces.

Section 13.08 <u>Denial of Permit; Grounds; Revocation</u>

A. Any application for a temporary outdoor event shall be granted to an applicant by the Administrator unless the Administrator finds that:

1. False or misleading information is contained in the application or required information is omitted;

2. The applicant does not have sufficient financial backing or stability to carry out the preparations specified in the application or to insure the faithful performance of his agreements;

3. The preparations specified in the application are insufficient to protect the community or the persons attending the event from health dangers or to avoid violations of V.T.C.A., Health and Safety Code, Chapter 341;

4. The times and place for the temporary outdoor event create a substantial danger of traffic or pedestrian congestion and disruption of other lawful activities;

5. The preparations specified in the application are insufficient to limit the number of persons in attendance at the temporary outdoor event to the maximum number stated in the application;

6. The applicant does not have adequate agreements with performers to insure with reasonable certainty that the persons advertised to perform would appear;

7. The preparations specified in the application fail to meet the requirements for a Certificate of Occupancy and all other requirements of the applicable Chapters of the Code of the City of Arlington, including but not limited to the provisions of the "Fire Prevention" and "Zoning" Chapters of said Code;

8. The temporary outdoor event would violate any applicable federal, state, or municipal law;

9. The preparations fail to meet the conditions which the Administrator has required pursuant to Section 13.05 above; or

10. The proposed temporary outdoor event would conflict with another event regulated by this article.

11. The applicant has failed to pay past fees associated with an Outdoor Festival or temporary outdoor event.

12. Within the previous twelve (12) months, the applicant violates a provision of this Article or any federal, state, or local laws and ordinances during a temporary outdoor event.

B. After notice to the applicant, the Administrator or an official of the Police, Fire, or Environmental Health Departments may revoke the permit on a finding that the preparations for the temporary outdoor event will not be carried out as stated in the application or the conditions imposed by the permit will not be met.

Section 13.09 <u>Permit Denial or Revocation Hearing</u>

A. Every denial or revocation of a permit under this Article shall be in writing and shall state the reason for such action. Said notice shall immediately be sent to the applicant/permittee by certified mail, or shall be personally delivered to such person.

B. Any applicant/permittee may, within ten (10) business days after the date of the notice provided for in Subsection (A) above, submit to the Administrator a written request for a hearing to show cause as to why the permit should be granted or should not be revoked, as the case may be. Such request shall not stay the denial or revocation. A hearing shall be scheduled within ten (10) business days of such request and notice of the hearing shall be given to all affected parties.

C. Following the hearing, the Administrator shall render a written decision granting or denying the application, or reinstating or revoking the permit, as the case may be.

D. An appeal of the Administrator's decision in Subsection (C) above may be made in writing to the Appeal Officer within ten (10) business days of the date of said decision. A hearing shall be set within ten (10) business days of receipt of the request for appeal and notice of the hearing shall be given to all affected parties.

E. Any decision of the Administrator under Subsection (C) above which is not appealed shall be final. Any person, firm or corporation aggrieved by a decision of the Appeal Officer may present to a court of record a petition, duly verified, setting forth that such decision is illegal in whole or in part, and specifying the grounds of the illegality. Unless such petition is filed with said court within ten (10) business days of the decision of the Appeal Officer, the decision shall become final.

Section 13.10 <u>Permit Posting</u>

Permits required by this Article shall be publicly posted in the area where the activity is conducted or produced, and shall be exhibited upon demand to any law enforcement officer or City ordinance enforcement official. The posted permit shall have emergency contact information for the person(s) responsible for the operation of the temporary outdoor event.

Section 13.11 <u>Exception</u>

The provisions of this Article shall not apply if the location of the temporary outdoor event is either (a) one for which a Certificate of Occupancy has already been granted and/or a final inspection, as applicable, has already occurred if the event is held in an individual dwelling unit; or (b) a major sports complex, as defined in the "Zoning" Chapter of the Code of the City of Arlington or a (c) City Park as defined by the Parks Chapter of the Code of the City of Arlington.

(Amend Ord 11-001, 1/4/11)

Section 13.12 <u>Mobile Food Establishment (“Food Truck”)</u>

A temporary outdoor event permit may be approved with the addition of (or solely for the purpose of permitting the lawful operation of) a mobile food establishment on private property within the City of Arlington.

Both the applicant and any person operating a mobile food establishment may be held responsible under both civil and criminal penalties for any violation of any of the provisions of Article XIII herein, or Article IV, Section 4.14.5 herein, or of Article IV, Regulation of Food Establishments, of the "Health and Sanitation" Chapter, as amended, of the Arlington City Code. (Amend Ord 17-005, 2/14/17)

ARTICLE XIV

OVERSIZE AND OVERWEIGHT VEHICLE PERMITS

Section 14.01 Application and Permit Requirements

A. Any vehicle operated on a public street within the corporate limits of the City of Arlington which is required to have a permit under the provisions of Section 6.03 (C), (D) and (E) of the "Traffic" Chapter of the Code of the City of Arlington, other than one involved in moving buildings pursuant to Article III of this Chapter above, shall file an application with the Building Official containing the following:

1. The kind of equipment to be operated, with a complete description of the same and a statement as to its weight;

2. The kind of commodity to be transported and a certificate as to its weight; and

3. The street or streets over which the said equipment is to be operated, the date or dates and the approximate time of said operation and the number of trips to be made: provided, however, that when the nature, route, time or frequency of operation cannot be determined at the time the permit is issued, this provision may be waived by the Building Official.

B. Any permit issued under this Article shall include the following information:

1. The name of the applicant, the date of the operation, a description of equipment to be operated and a description of the commodity to be transported;

2. The signatures of the Building Official or an authorized representative and an authorized employee of the Transportation Department of the City of Arlington; (Amend Ord 96-93, 7/2/96)

3. The time for which the permit is issued;

4. The specified street or streets over which the equipment is to be operated, insofar as it can be determined at the time the permit is issued; and

5. Any other pertinent information deemed necessary by the Building Official.

C. The proper fee set in accordance with Section 4.09 above shall accompany each application for permit and shall be made in cash, by cashier or certified check or by postal money order. The fee shall be returned if the application is denied.

ARTICLE XV

NOISE LEVEL REDUCTIONS

Section 15.01 Aircraft Noise Zones

For the purpose of this Article, certain sections of the City of Arlington are hereby declared to be zones subject to significant noise from aircraft. Airport Overlay Zones AP-2, AP-3 and AP-4 established in Section 10-1000 of the "Zoning" Chapter of the Code of the City of Arlington shall be designated as Noise Zones for the purpose of this Article. These Noise Zones include such territory or portions of said City as designated and shown in the Airport Overlay Zones on the Official Zoning Map of said City.

Section 15.02 Certification of Plans

A. Prior to the issuance of a building permit for any structure or building within the Noise Zones established by Section 15.01 above, the Building Official shall determine the applicable noise level reduction required in Section 10-1000 of the "Zoning" Chapter of the Code of the City of Arlington. If the proposed use and location are not considered compatible without restrictions, the noise level reduction characteristics of the plans and specifications must be certified by an approved acoustical consultant as meeting the requirements of Section 10-1000 of the "Zoning" Chapter before the permit will be issued by the Building Official.

B. The term "acoustical consultant" shall include any registered engineer or architect who is approved by the Building Official based on the demonstration of competence and credentials in the area of architectural and environmental acoustics.

C. A building or structure which is located across a noise contour as shown on the Official Zoning Map of the City of Arlington shall be considered to be entirely within the most restrictive of the Noise Zones within which it is partly located. (Amend Ord 89-76, 6/27/89)

ARTICLE XVI

DANGEROUS BUILDINGS

Section 16.01 Authority

This article is adopted pursuant to the authority provided by Chapter 214 of the Texas Local Government Code, as amended. Chapter 214 of the Texas Local Government Code, as amended, is adopted as if set out word for word. In the event of conflict or inconsistency in the wording of state and local law, state law shall prevail unless city ordinances state a more stringent law or procedure authorized in accordance with city home rule authority and relevant law.

Section 16.02 Definitions

The following words as used in Articles XVI, XVII and XVIII shall be defined as stated below.

"Administrator" shall mean the City Manager appointed Department Administrator or their designees charged with the administration and enforcement of this Chapter.

"Building" shall mean any structure which is built for the support, shelter, or enclosure or partial enclosure of persons, animals, chattels, or movable property of any kind including pools.

"Hearing Authority" means the City's Municipal Court, a board or commission listed in the Administration Chapter of the City Code, or a person assigned the responsibility of conducting a hearing under this Chapter by the Administrator.

"Swimming Pool" or "Pool" shall be defined as referenced in the Health and Sanitation Chapters of the Arlington City Code of Ordinances. (Amend Ord 09-024, 5/5/09)

Section 16.03 Dangerous Building Defined

A. Section 302 of the 1994 edition of the Uniform Code for the Abatement of Dangerous Buildings, as published by the International Conference of Building Officials, is hereby adopted but modified and amended by the following, so that Section 302, entitled "Dangerous Buildings," shall read as follows:

Any building or structure which has defects or conditions described herein is a dangerous building, provided that such condition or defects exist to the extent that the life, health, property or safety of the public or its occupants are endangered:

1. When any door, aisle, passageway, stairway or other means of exit is not of sufficient width or size or is not so arranged as to provide safe and adequate means of exit in case of fire or panic;

2. When the walking surface of any aisle, passageway, stairway or other means of exit is warped, worn, loose, torn or otherwise unsafe so that it would not provide safe and adequate means of exit in case of fire or panic;

3. When the stress in any materials, member or portion thereof, due to all dead and live loads, is more than one and one half (1 1/2) times the working stress or stresses allowed in the Building Code for new buildings of similar structure, purpose or location;

4. When any portion has been damaged by fire, earthquake, wind, flood or by any other cause, to such an extent that the structural strength or stability thereof is materially less than it was before such catastrophe and is less than the minimum requirements of the Building Code for a newly constructed building of like area, height and occupancy;

5. When any portion or member or appurtenance is likely to fail, or to become detached or dislodged, or to collapse and thereby injure persons or damage property;

6. When any portion of the building, or when any member, appurtenance or ornamentation on its exterior is not of sufficient strength or stability, or is not anchored, attached or fastened in place so as to be capable of resisting a wind pressure of one half (1/2) of that specified in the Building Code for a newly constructed building of like area, height and occupancy, without exceeding the working stresses permitted in the Building Code for such buildings;

7. When any portion has wracked, warped, buckled or settled to such an extent that walls or other structural portions have materially less resistance to winds or earthquakes than is required in the case of similar new construction;

8. When the building or any portion thereof is likely to partially or completely collapse because of:

a. Dilapidation, deterioration or decay;

b. Faulty construction;

c. The removal, movement or instability of any portion of the ground necessary for the purpose of supporting such building;

d. The deterioration, decay or inadequacy of its foundation; or

e. Any other cause;

9. When, for any reason, the building or any portion thereof is manifestly unsafe for the purpose for which it is being used;

10. When the exterior walls or other vertical structural members list, lean or buckle to such an extent that a plumb line passing through the center of gravity does not fall inside the middle one third of the base;

11. When the building, exclusive of the foundation, shows thirty-three percent (33%) or more damage or deterioration of its supporting member or members, or fifty percent (50%) damage or deterioration of its nonsupporting members, enclosing or outside walls or coverings;

12. If the building was constructed or is maintained in violation of any specific requirement or prohibition applicable to such building provided by the Building Code, or of any law or ordinance of this state or City relating to the condition, location or structure of buildings;

13. If the building has in any nonsupporting part, member or portion less than fifty percent (50%), or in any supporting part, member or portion less than sixty-six percent (66%) of the strength, fire-resisting qualities or characteristics, or weather-resisting qualities or characteristics required by law for a newly constructed building of like area, height and occupancy;

14. If the building is used or intended to be used for dwelling purposes, and because of inadequate maintenance, dilapidation, decay, damage, faulty construction or arrangement, inadequate light, air or sanitation facilities, or otherwise, is determined by the Building Official or Administrator or an authorized representative to be unsanitary, unfit for human habitation or in such a condition that is likely to cause sickness or disease;

15. If the building, because of obsolescence, dilapidated condition, deterioration, damage, inadequate exits, lack of sufficient fire-resistive construction, faulty electric wiring, gas connections or heating apparatus, or other cause, is determined by the Building Official or Administrator or an authorized representative to be a fire hazard;

16. When any portion of an abandoned building or structure remains on a site after the demolition or destruction of the building or structure;

17. When the building or its curtilage contains accumulations of litter; refuse; garbage; rubbish; junk; animal carcasses; decaying flesh, fish, fowls or vegetables; stagnant water or other stagnant liquid; flammable liquids; slops; trash; or other deposits or substances, which are unwholesome, filthy, unsightly, offensive or unsanitary; likely to create or engender disease; likely to harbor insects or rodents; or likely to pollute storm water;

18. When a building which is partially constructed has not had any significant construction work done on it in the preceding six (6) months, and it is not secured by a fence or other means to prevent children and vagrants from entering the building; or

19. When a building which is partially constructed has not had any significant construction work done on it in the preceding six (6) months, and all building materials and construction equipment and tools have neither been removed from the construction site nor secured at the site to prevent their use by children; their theft; their deterioration; their vandalism; or their harborage of rodents or insects.

B. Any building or structure is a dangerous building when it is unsafe, unsanitary, substandard, unfit for human habitation, not provided with adequate egress, or which constitutes a fire hazard, otherwise dangerous to human life or which constitutes a hazard to the safety, health or welfare of the public or its occupants, for any reason or by reason of inadequate maintenance, dilapidation, obsolescence, or abandonment.

C. Any building or structure is a dangerous building, regardless of its structural condition,

1. When unoccupied by its owners, lessees, or other invitees and unsecured from unauthorized entry to the extent that it could be entered or used by

vagrants or other uninvited persons as a place of harborage or could be entered or used by children, or

2. When boarded up, fenced or otherwise secured in any manner if the means used to secure the building or structure are inadequate to prevent unauthorized entry or use by vagrants or other uninvited persons as a place of harborage, or to prevent entry or use by children, or

3. When boarded up, fenced or otherwise secured in any manner if the building or structure constitutes a danger to the public even though secured from entry.

Section 16.04 Commencement of Hearing

A. **Hearing.** The Administrator may schedule a hearing before the Municipal Court to determine whether a building or structure is a dangerous building and, if so, whether it shall be vacated, secured, repaired, removed, and/or demolished, or any occupants relocated. The Municipal Court shall be known as the "Hearing Authority".

B. **Scheduling of Hearing**. The Administrator may schedule a public hearing:

1. When the Administrator has inspected any building or structure, other than an owner-occupied, single family dwelling, and has determined that such building is a dangerous building, and that such building is fifty (50) years old or older or located in a landmark preservation overlay zoning district, he shall report this determination to the local historic preservation board for review of the building pursuant to § 214.00111, Texas Local Government Code, or any successor statute, and the Administrator may thereafter schedule a hearing before the Hearing Authority as permitted by state law; or

2. When the Administrator has inspected any owner-occupied, single family dwelling and has determined that such building is a dangerous building, he may schedule a hearing before the Hearing Authority. (Amend Ord 15-052, 10/27/15)

C. **Issuance of Notice**.

1. The Administrator shall issue a notice of hearing to each owner of the building and to each mortgagee and lienholder of the building and of the

property on which it is located, as known by the city and as shown by search of the following records:

a. Official Public Records of Real Property in Tarrant County, specifically in the Tarrant County Clerk's Office;

b. Appraisal district records for the appraisal district in which the building is located;

c. Records of the Texas Secretary of State;

d. Assumed name records for Tarrant County;

e. Tax records of the City of Arlington; and

f. Utility records for the City of Arlington.

2. The Administrator shall issue notice of hearing to all unknown owners, if any, by posting the notice as described in Section 16.04(E)(1).

D. **Contents of Notice**. The notice shall contain:

1. The street address or legal description of the building;

2. A statement that the Administrator has found the building to be dangerous, and a brief description of the conditions found to render the building dangerous under the provisions of Section 16.03;

3. A statement specifying the date, time and place of the hearing; and

4. A statement that the owner, lienholder, or mortgagee will be afforded an opportunity to comment at the hearing and will be required to submit at the hearing proof of the scope of any work that may be required to comply with the minimum standards set out in city ordinance and the time it will take to reasonably perform the work.

E. **Service of Notice**.

1. Notice of the hearing shall be given by certified mail, return receipt requested, or by personal service. If the address of any person entitled to notice cannot be ascertained, or if service cannot be made by mail or in person after a reasonable attempt, and for all unknown owners, service

shall be made by posting a copy of the notice on the front door of each improvement situated on the affected property or as close to the front door as practicable.

2. The notice shall be mailed and/or posted before the tenth (10th) day before the date of the hearing. Service by certified mail shall be effective on the date of mailing.

3. Proof of personal service shall be certified at the time of service by a written declaration executed by the person effecting service, declaring the date, time and manner in which service was made. The declaration, together with any receipt card returned in acknowledgment of receipt by certified mail shall be affixed to the copy of the notice retained by the Administrator.

4. Notice of the hearing may be filed in the Official Public Records of Real Property in Tarrant County, specifically in the Tarrant County Clerk's Office. The notice shall contain:

   a. the name and address of the owner of the affected property if that information can be determined;

   b. a legal description of the affected property; and

   c. a description of the hearing.

   The filing of the notice is binding on subsequent grantees, lienholders, or other transferees of an interest in the property who acquire such interest after filing of the notice, and constitutes notice of the hearing on any subsequent recipient of any interest in the property who acquires such interest after the filing of the notice.

Section 16.05 <u>Conduct of Hearing</u>

A. **<u>Failure to Appear</u>**. If the owner of the building fails to appear at the hearing after being duly served, the Hearing Authority shall conduct the hearing as if the owner personally appeared.

B. **<u>Subpoena Power</u>**. Witnesses may be subpoenaed in accordance with the procedures set forth in Article XI of the "Administration" Chapter.

C. **Procedure**. The Hearing Authority shall be authorized to establish rules and regulations for the conduct of hearings, if such are consistent with this Chapter, other local ordinances and state law.

D. **Decisions and Orders**.

1. After all evidence has been presented at the hearing, the Hearing Authority shall determine whether the building or structure is a dangerous building. If more than one (1) building is located on a property and is the subject of the hearing, the Hearing Authority shall make a separate determination for each building.

2. The Hearing Authority shall enter orders as set forth below:

a. If the building or structure is declared a dangerous building under Section 16.03, except Subsections (A)(16), (A)(17), (A)(18) and (A)(19), the Hearing Authority shall order the owner, at his option, to repair, remove or demolish the building. The Hearing Authority shall specify a reasonable period of time for the owner to do so.

b. If the building or structure is declared a dangerous building under Subsection 16.03(A)(16), the Hearing Authority shall order the owner to remove or demolish the building, and shall specify a reasonable period of time for the owner to do so.

c. If the building or structure is declared a dangerous building under Subsection 16.03(A)(17), the Hearing Authority shall order the owner to remove the accumulated matter, and shall specify a reasonable period of time for the owner to do so.

d. If the building or structure is declared a dangerous building under Subsection 16.03(A)(18), the Hearing Authority shall order the owner, at his option, to secure, demolish or remove the building, and shall specify a reasonable period of time for the owner to do so.

e. If the building or structure is declared a dangerous building under Subsection 16.03(A)(19), the Hearing Authority shall order the owner, at his option, to secure or remove all building materials, equipment and tools, and shall specify a reasonable period of time for the owner to do so.

f. If the building or structure is declared a dangerous building under Section 16.03, the Hearing Authority shall order the owner to secure the building, and shall specify a reasonable period of time for the owner to do so. If the owner fails to properly secure the building as ordered, the Administrator may secure the building under Article XVII of this code, assessing expenses and placing liens against the property as authorized by this Chapter.

3. If necessary to protect the health, safety and welfare of the building's occupants, the Hearing Authority shall order the building vacated. If the condition of the building is due to neglect or to intentional or negligent acts by the owner, the Hearing Authority shall order the owner to relocate the occupants at his reasonable expense and in a reasonable manner. The Hearing Authority shall specify a reasonable period of time for the completion of the relocation.

4. The Hearing Authority shall also order an additional reasonable period of time for all mortgagees or lienholders to comply with the order should the owner fail to comply with the order within the time provided for action by the owner.

5. The Hearing Authority shall also order a civil penalty that the City may assess if the owner fails to repair, remove or demolish the building in accordance with the Hearing Authority's order. Such penalty shall not exceed the amount of One Thousand Dollars and No Cents ($1,000.00) per day that the building is out of compliance with the order.

6. A reasonable period of time to comply with an order of the Hearing Authority is within thirty (30) days from the date of an order:

   a. to secure the building from unauthorized entry, or

   b. to repair, remove or demolish the building, unless the owner or lienholder or mortgagee establishes at the hearing that the work cannot reasonably be performed within thirty (30) days.

7. If the Hearing Authority finds that the work cannot reasonably be performed within thirty (30) days to repair, remove or demolish the building, the Hearing Authority shall order specific time schedules for the commencement and performance of the work and shall order the owner, lienholder, or mortgagee to secure the property in a reasonable manner from unauthorized entry while the work is being performed.

8. The Hearing Authority shall not order the owner, lienholder, or mortgagee more than ninety (90) days to repair, remove, or demolish the building or fully perform all work required to comply with the order unless the owner, lienholder or mortgagee:

   a. submits a detailed plan and time schedule for the work at the hearing; and

   b. the Hearing Authority finds that the work cannot reasonably be completed within ninety (90) days because of the scope and complexity of the work.

9. If the Hearing Authority allows the owner, lienholder or mortgagee to complete any part of the work required to repair, remove or demolish the building within a time period that is more than ninety (90) days, the Hearing Authority shall order that the owner, lienholder or mortgagee regularly submit progress reports to the Administrator and appear before the Hearing Authority or its designee to prove compliance with the time schedule established for commencement and performance of the work. If the owner, lienholder, or mortgagee owns property, including structures or improvements on property, within the City of Arlington that exceeds $100,000 in total value, the Hearing Authority may require the owner, lienholder, or mortgagee to post a cash or surety bond in an amount adequate to cover the cost of repairing, removing, or demolishing a building under this Article. The Hearing Authority may require the owner, lienholder, or mortgagee to provide a letter of credit from a financial institution or a guaranty from a third party approved by the City. The bond must be posted, or the letter of credit or third party guaranty provided, not later than the 30th day after the date the Hearing Authority issues the order.

Section 16.06 <u>Contents of Order</u>

A. An order issued by the Hearing Authority shall be in writing and shall set forth the decisions of the Hearing Authority made pursuant to Section 16.05(D).

B. An order to repair shall set forth those items that need to be repaired.

C. An order to vacate shall require the Administrator to post notice to vacate at or upon each entrance and exit of the building or structure in substantially the form described by Section 16.10.

D. An order shall be signed by the Municipal Court Judge.

E. A copy of the order shall be sent promptly after the hearing by certified mail, return receipt requested, to the owner of the building and to any lienholder or mortgagee of the building. If a notice is mailed according to this subsection and the United States Postal Service returns the notice as "refused" or "unclaimed", the validity of the notice is not affected, and the notice shall be deemed as delivered.

F. Within ten (10) days after the date the order is issued:

1. a copy of the order shall be filed in the office of the City Secretary; and

2. a notice shall be published in a newspaper of general circulation in the City, said notice containing:

a. the street address or legal description of the property;

b. the date of the hearing;

c. a brief statement indicating the results of the order; and

d. instructions stating where a complete copy of the order may be obtained. (Amend Ord 15-052, 10/27/15)

Section 16.07 <u>Failure to Comply With Order</u>

A. If the owner of a building declared dangerous fails to comply with an order of the Hearing Authority within the allotted time, the Administrator shall cause a copy of the Hearing Authority's order to be sent by certified mail return receipt requested to each lienholder and mortgagee as was determined pursuant to Section 16.04(C). This shall constitute notice to the lienholders and mortgagees that the owner has failed to comply with the order.

B. If the lienholders and mortgagees fail to comply with the order within the time allotted to them by the Hearing Authority, the Administrator may:

1. Vacate, secure, repair, remove and/or demolish the building at the City's expense; or

2. Assess a civil penalty against the owner of the building, as provided by the Hearing Authority, for failure to comply with the order.

C. The Administrator is authorized to repair a building only to the extent necessary to bring the building into compliance with minimum standards, and only if the building is a residential building with ten (10) or fewer units.

D. The Administrator is authorized, if the order requires demolition, to cause the building to be sold and demolished, or to be demolished and the materials, rubble and debris removed and the lot cleaned. Any such demolition work shall be accomplished, and the cost thereof paid and recovered in the manner provided in Article XVIII of this Chapter. Any surplus realized from the sale of any such building or from the demolition thereof over and above the cost of demolition and of cleaning the lot shall be paid to the person or persons lawfully entitled thereto.

E. The Administrator is further authorized to ask the City Attorney to bring suit against the owner in a Tarrant County district court to request that a receiver be appointed to rehabilitate the property.

Section 16.08 <u>Liens for Penalties and Expenses</u>

A. If pursuant to this Chapter the City assesses a civil penalty or incurs expenses including the Administrative Fee as set by resolution of City Council for City administrative expenses, the City may assess the expenses or penalty on and place a lien against the land on which the building was located, unless the land is a homestead protected by the Texas Constitution. (Amend Ord 07-096, 12/18/07)

B. A lien imposed pursuant to this article is a privileged lien as provided by Local Government Code Chapter 214. (Amend Ord 15-052, 10/27/15)

C. The lien arises and attaches to the property at the time the notice of the lien is recorded and indexed in the official public records of real property in Tarrant County, specifically in the office of the county clerk for Tarrant County. The notice shall contain the name and address of the owner if that information can be determined; a legal description of the land on which the building was located; the amount of expenses incurred by the City or the civil penalty and the balance due.

D. A lien under this chapter is extinguished when the property owner or other person with an interest in the legal title to the land pays the City the balance due in full. At the time of sale of properties with the aforementioned privileged lien, the lien shall be released without payment if the purchaser's family income meets the current Department of Housing and Urban Development Low or Moderate Income Requirements for the Fort Worth-Arlington Primary Metropolitan Statistical Area in accordance with federal law.

E. At the time of sale of properties with the aforementioned privileged lien, the lien may be assumed if the purchaser is a 26 U.S.C.A. §501(c)(3) not-for-profit entity with the principal office located in Tarrant County, Texas, the primary purpose of which is constructing or rehabilitating single family homes for people who meet the current Department of Housing and Urban Development (HUD) Low or Moderate Income Requirements for the Fort Worth-Arlington Primary Metropolitan Statistical Area in accordance with federal law.

Section 16.09 <u>Notice and Collection of Penalty and Expenses</u>

A. If the City incurs expenses under this Chapter including the Administrative Fee as set by resolution of City Council for City administrative expenses, the Administrator shall cause a statement to be sent to the owner, setting forth the amount of the expenses and the interest accrued to date. The Administrator may thereafter cause an annual statement to be sent to the owner until the expenses and interest are paid in full. (Amend Ord 07-096, 12/18/07)

B. If the City assesses a civil penalty pursuant to this Chapter, the Administrator shall cause a notice to be sent to the owner that the City has begun assessing the penalty provided by the order. Thereafter, the Administrator may cause a monthly statement to be sent to the owner, setting forth the amount of the accrued penalty and interest, until the penalty and interest is paid in full.

C. A civil penalty or assessment for expenses shall accrue interest at the rate of ten percent (10%) per annum or as allowed by law from the date of assessment until paid in full.

D. The City shall be entitled to all remedies provided by law for the collection of debt in order to recover penalty, expenses and interest. However, the City shall not be entitled to foreclose a lien for repair expenses if the property on which the repairs were made is occupied as a residential homestead by a person sixty-five (65) years of age or older.

Section 16.10 <u>Notice to Vacate; Violations</u>

A. Every notice to vacate shall be posted at or upon each entrance and exit of the building and shall be in substantially the following form:

DO NOT ENTER
UNSAFE TO OCCUPY

It is a misdemeanor to occupy this building,
or to remove or deface this notice.

Director of Community Services
City of Arlington

The Notice to Vacate shall specify the conditions which necessitate the posting and recite the emergency or shall identify the order to vacate and state where a complete copy of the order may be obtained. (Amend Ord 06-081, 8/22/06)

B. **<u>Compliance; Violations</u>**

No person shall remain in or enter any building which has been posted, except that entry may be made to repair, remove, demolish or secure such building under permit. No person shall remove or deface any such notice after it is posted until the required work has been completed and a Certificate of Occupancy is issued pursuant to the provisions of the Building Code. Any person violating this subsection shall be guilty of a misdemeanor punishable by a fine not to exceed Two Thousand Dollars and No Cents ($2,000.00).

Section 16.11 <u>Other Enforcement</u>

A. It is a violation for any person, firm or corporation to own, lease, use, occupy or maintain a dangerous building as defined in this Article, or to cause or permit the same to be done, in the City of Arlington. A violator shall be guilty of a misdemeanor punishable by a fine not to exceed Two Thousand Dollars and No Cents ($2,000) for each violation pursuant to the penalties provisions of this Chapter. (Amend Ord 12-020, 4/24/12)

B. Each day that a violation continues shall constitute a separate offense.

C. A criminal prosecution shall be in addition to any civil remedies to which the City is entitled. The remedies provided by this article shall be in addition to the remedies provided by this chapter or any other applicable ordinance or statute.

D. No person shall obstruct, impede or interfere with any officer, employee, contractor or authorized representative of the City or with any person who owns or holds an estate or interest in any building or structure which has been ordered repaired, removed, secured, vacated or demolished under the provisions of this Code, or with any person to whom such building has been lawfully sold, whenever such officer, employee, contractor or authorized representative of the City, person having an interest or estate in such building or structure, or purchaser is engaged in the work as ordered or in performing any necessary act preliminary to or incidental to such work. A person who obstructs, impedes or interferes with an order of the Hearing Authority shall be guilty of a misdemeanor punishable by a fine not to exceed Two Thousand Dollars and No Cents ($2,000.00).

Section 16.12 <u>Swimming Pool Enclosures</u>

A. The Administrator may repair, replace, secure, or otherwise remedy a swimming pool enclosure or fence that is damaged, deteriorated, substandard, dilapidated, or otherwise in a state that poses a hazard to the public health, safety, and welfare.

B. The Administrator may require the owner of the property on which the swimming pool or enclosure or fence is situated, after notice and hearing as provided in this Chapter, to repair, replace, secure, or otherwise remedy an enclosure or fence of a swimming pool that the Administrator determines violates minimum standards in accordance with state or city law.

C. If the enclosure or fence is on unoccupied property or is on property occupied only by persons who do not have a right of possession to the property, the Administrator shall give notice to the owner, in accordance with the procedures set out in this Chapter, of the municipality's action to repair, replace, secure, or otherwise remedy an enclosure or fence of a swimming pool.

D. If the City incurs expenses under this Article including the Administrative Fee as set by resolution of City Council for City administrative expenses, the Administrator may assess the expenses on, and the City has a lien against the

property on which the swimming pool or the enclosure or fence is situated, unless it is a homestead as protected by the Texas Constitution. The lien is extinguished if the property owner or another person having an interest in the legal title to the property reimburses the City for the expenses. The lien arises and attaches to the property at the time the lien is recorded in the office of the Tarrant County Clerk. The lien must contain the name and address for the owner if that information can be determined with a reasonable effort, a legal description of the real property on which the swimming pool or the enclosure or fence is situated, the amount of expenses incurred by the City, and the balance due. The lien is a privileged lien subordinate only to tax liens and all previously recorded bona fide mortgage liens attached to the real property to which the City's lien attaches. (Amend Ord 07-096, 12/18/07)

E. It is a violation for any person, firm or corporation to maintain a swimming pool enclosure or fence that is damaged, deteriorated, substandard, dilapidated or otherwise in a state that poses a hazard to the public health, safety, and welfare or to cause or permit the same to be done in the City of Arlington. A violator shall be guilty of a misdemeanor punishable by a fine not to exceed One Thousand Dollars and No Cents ($1,000) for each violation. Each day a violation occurs constitutes a separate offense. (Amend Ord 04-004, 1/13/04)

Section 16.13 <u>Requiring Repair, Removal, or Demolition of Structure</u>

A. If the Administrator has reason to believe that a fence, shed, awning, retaining wall, or other structure, or part of a structure, hereinafter referred to as "structure", is likely to endanger persons or property, the Administrator shall schedule a public hearing before the Hearing Authority for a determination of whether the structure is likely to endanger persons or property and for the issuing of a proposed order on the repair, removal or demolition of the structure.

B. <u>Hearing Authority Hearing</u>

1. <u>Scheduling a Hearing</u>. The Administrator shall schedule a hearing when the Administrator has determined that such structure is likely to endanger persons or property.

2. <u>Issuance of Notice</u>.

a. The Administrator shall issue a notice of hearing to each owner of the structure, owner of the property on which the structure is

located, mortgagee, and lienholder, as known by the City and as shown by search of the following records:

(1) Official Public Records of Real Property in Tarrant County, specifically in the Tarrant County Clerk's Office;

(2) Appraisal district records for the appraisal district in which the structure is located;

(3) Records of the Texas Secretary of State;

(4) Assumed name records for Tarrant County;

(5) Tax records of the City of Arlington; and

(6) Utility records for the City of Arlington.

b. The Administrator shall issue notice of hearing to all unknown owners, if any, by posting a copy of the notice on the front door of each improvement situated on the affected property or as close to the front door as practicable.

3. Contents of Notice. The notice shall contain:

a. The street address or legal description of the structure;

b. A statement that the Administrator has found that the structure is likely to endanger persons or property, and a brief description of the conditions found to render such likely to endanger persons or property;

c. A statement specifying the date, time and place of the hearing; and

d. A statement that the owner of the structure, owner of the property on which the structure is located, mortgagee, and lienholder will be afforded an opportunity to comment at the hearing and will be required to submit at the hearing proof of the scope of any work that may be required to abate the condition likely to endanger persons or property and the time it will take to reasonably perform the work.

4. Service of Notice.

a. Notice of the hearing shall be given by certified mail, return receipt requested, or by personal service. If the address of any person entitled to notice cannot be ascertained, or if service cannot be made by mail or in person after a reasonable attempt, and for all unknown owners, service shall be made by posting a copy of the notice on the front door of each improvement situated on the affected property or as close to the front door as practicable.

b. The notice shall be mailed and/or posted before the tenth (10th) day before the date of the hearing. Service by certified mail shall be effective on the date of mailing.

c. Proof of personal service shall be certified at the time of service by a written declaration executed by the person effecting service, declaring the date, time and manner in which service was made. The declaration, together with any receipt card returned in acknowledgment of receipt by certified mail shall be affixed to the copy of the notice retained by the Administrator.

d. Notice of the hearing may be filed in the Official Public Records of Real Property in Tarrant County, specifically in the Tarrant County Clerk's Office. The notice shall contain:

(1) the name and address of the owner of the affected property if that information can be determined;

(2) a legal description of the affected property; and

(3) a description of the hearing.

The filing of the notice is binding on subsequent grantees, lienholders, or other transferees of an interest in the property who acquire such interest after filing of the notice, and constitutes notice of the hearing on any subsequent recipient of any interest in the property who acquires such interest after the filing of the notice.

5. Conduct of Hearing.

a. Failure to Appear. If the owner fails to appear at the hearing after being duly served, the Hearing Authority shall conduct the hearing as if the owner personally appeared.

b. Subpoena Power. Witnesses may be subpoenaed in accordance with the procedures set forth in Article XI of the Administration Chapter of the City Code of Ordinances.

c. Procedure. The Hearing Authority shall be authorized to establish rules and regulations for the conduct of hearings, if such are consistent with this Chapter, other local ordinances and state law.

6. Findings and Orders.

a. After all evidence has been presented, the Hearing Authority shall determine whether the structure is likely to endanger persons or property.

b. The Hearing Authority shall enter an order as set forth below:

(1) If the structure is believed by the Hearing Authority to likely endanger persons or property, the Hearing Authority may issue an order that:

(a) finds that the structure is likely to endanger persons or property;

(b) orders the owner of the structure or owner of the property on which the structure is located, at his option, to repair, remove, or demolish the structure, or the part of the structure within a specified time;

(c) orders an additional specified period of time for all mortgagees or lienholders to comply with the order should the owner of the structure or the owner of the property on which the structure is located fail to comply with the order within the time provided for action; and

(d) orders that if the owner of the structure or the owner of the property on which the structure is located fails to comply with any part of the order by the specified dates and if any of the mortgagees or lienholders fail to comply with the order in the owner's stead by the specified dates, the City is hereby authorized at its discretion to repair, remove or demolish, at the expense of the City, on behalf of the owner of the structure or the owner of the property on which the structure is located, and assess the repair, removal or demolition expenses on the property on which the structure was located.

(2) If the structure is not believed by the Hearing Authority to likely endanger persons or property, the Hearing Authority may issue an order that finds that the structure is not likely to endanger persons or property.

7. Proposed Order.

a. The proposed order issued by the Hearing Authority shall be in writing and shall set forth the decisions of the Hearing Authority made pursuant to this Chapter.

b. An order to repair, remove or demolish shall set forth those items that need to be repaired, removed, or demolished.

c. The proposed order shall be signed and dated by the Municipal Court Judge or one or more persons assigned the responsibility of conducting a hearing under this Chapter.

d. After the hearing, the Hearing Authority shall promptly send a copy of the proposed order, a record of the hearing and any evidence to the Administrator.

e. The Administrator shall promptly send a copy of the Hearing Authority's proposed order by certified mail, return receipt requested, to the owner of the structure, owner of the property on which the structure is located, mortgagee, and lienholder. If a notice is mailed according to this subsection and the United States Postal Service returns the notice as "refused" or "unclaimed", the

validity of the notice is not affected, and the notice shall be deemed as delivered.

f. The Administrator may schedule on the City Council agenda the proposed order for final resolution by City Council no later than 30 days from the date of the proposed order. The Administrator shall issue notice to each owner of the structure, owner of the property on which the structure is located, mortgagee, and lienholder of the City Council agenda date, time and place for final resolution pursuant to the issuance, contents and service of notice for the Hearing Authority's hearing in this Chapter. (Amend Ord 12-020, 4/24/12)

C. City Council Resolution or Final Order

1. City Council may adopt, in whole or part, by City Council Resolution, the Hearing Authority's Proposed Order as its finding and order and the proposed order will become the final order.

2. City Council may amend, modify or reject the Hearing Authority's proposed order. If City Council amends, modifies or rejects the Hearing Authority's proposed order, the City Council, by City Council Resolution, shall issue its finding and order as the final order. City Council's finding and order shall be issued in accordance with the Hearing Authority's procedures for Findings and Decisions set forth in this Chapter.

3. If the Administrator does not schedule the proposed order on the City Council agenda after the expiration of 30 days from the proposed order, then the proposed order becomes the final order.

4. A copy of the City Council Resolution or final order shall be sent promptly by the Administrator by certified mail, return receipt requested, to the owner of the structure, owner of the property on which the structure is located, mortgagee, and lienholder. If such City Council Resolution or final order is mailed according to this subsection and the United States Postal Service returns the order as "refused" or "unclaimed", the validity of notice of the City Council Resolution or final order is not affected, and the order shall be deemed as delivered.

5. Within ten (10) days after the date of passage of the City Council Resolution or effective date of the final order:

a. a copy of the City Council Resolution or final order containing its finding and order regarding the structure shall be filed in the Office of the City Secretary; and

b. a notice shall be published in a newspaper of general circulation in the City, said notice containing:

(1) the street address or legal description of the property;

(2) the date of consideration of the City Council Resolution or effective date of the final order;

(3) a brief statement indicating the results of the City Council Resolution; and

(4) instructions stating where a complete copy of the City Council Resolution or final order may be obtained.

(5) If the owner of the structure or the owner of the property on which the structure is located fails to comply with an order in the City Council Resolution or final order within the allotted time, the Administrator shall cause a copy of the City Council Resolution or final order to be sent by certified mail return receipt requested to each lienholder and mortgagee as was determined pursuant to this Chapter. This shall constitute notice to the lienholders and mortgagees that the owner has failed to comply with the order.

6. When any work to repair, remove, or demolish is done by the City pursuant to this Chapter, the Administrator shall cause the work to be accomplished by City personnel or by private contract under the direction of the Administrator, or he may employ such architectural, engineering, or other specialized assistance on a contract basis as reasonably necessary.

7. Any expenses for work to repair, remove or demolish shall be assessed pursuant to Article XVIII of the Construction Chapter except as to the following:

The Administrator shall also provide notice of the assessment to the owner of the structure and the owner of the property on which the structure was located by mailing by certified mail, postage prepaid a copy of the Hearing Authority's order assessing cost. (Amend Ord 12-020, 4/24/12)

ARTICLE XVII

ADDITIONAL AUTHORITY TO SECURE BUILDING

Section 17.01 Authority to Secure Building

The Administrator may secure or cause to be secured a building at the City's expense if he determines:

1. That the building or structure violates the minimum standards for the use and occupancy of buildings in the City regardless of the date of their construction, and

2. That the building or structure is unoccupied or is occupied only by persons who do not have a right of possession to the building.

Section 17.02 Issuance of Notice

Before the eleventh (11th) day after the date the building is secured pursuant to Section 17.01, the Administrator will give notice to the owner that the building has been secured. The Administrator may also give notice to each mortgagee and lienholder, and to any unknown owners, in the same manner as described by Section 16.04(C).

Section 17.03 Contents of Notice

The notice will contain:

1. An identification of the building and the property on which it is located; and

2. A description of the violation of the ordinance that is present at the building; and

3. A statement that the City has secured the building; and

4. A statement explaining the owner's right to request a hearing about any matter relating to the City's securing of the building.

Section 17.04 <u>Service of Notice</u>

Notice regarding the securing of the building shall be given by either:

1. personally serving the owner with written notice; or

2. depositing the notice in the United States mail addressed to the owner at the owner's post office address; or

3. if personal service cannot be obtained and the owner's post office address is unknown;

   a. publishing the notice at least twice within a ten (10) day period in the official newspaper of the City; or

   b. posting the notice on or near the front door of the building.

Section 17.05 <u>Hearing</u>

If, within thirty (30) days after the date a building is secured pursuant to this Chapter, the owner files with the Administrator a written request for a hearing, the Administrator will schedule a hearing before the Hearing Authority. At the hearing the owner may testify or present witnesses or written information about any matter relating to the City's securing of the building.

A. <u>Scheduling of Hearing</u>

The Hearing Authority will conduct the hearing within twenty (20) days after the date the request is filed.

B. Notice of Hearing

Notice of the hearing shall be provided to the requestor by personal service or certified mail, return receipt requested, before the 10th day before the hearing, in the same manner as provided in Section 16.04(E)(2) and (3).

Section 17.06 Liens and Collection of Expenses

If the City incurs expenses under this Chapter including the Administrative Fee as set by resolution of City Council for City administrative expenses, the City may assess the expenses on and place a lien against the land on which the building is located, in accordance with this Chapter. (Amend Ord 07-096, 12/18/07)

ARTICLE XVIII

PERFORMANCE OF WORK AND RECOVERY OF COST

Section 18.01 General Procedure

When any work to repair, remove, secure, vacate, or demolish is to be done pursuant to this code, the Administrator shall cause the work to be accomplished by City personnel or by private contract under the direction of the Administrator, or he may employ such architectural, engineering, or other specialized assistance on a contract basis as reasonably necessary.

Section 18.02 Account of Expense, Filing of Report: Contents

The Administrator shall keep an itemized account of the expense incurred by this jurisdiction for the work to repair, remove, secure, vacate or to demolish any building pursuant to the provisions of this Chapter. Upon the completion of the work, the Administrator shall prepare a report specifying the work done, the itemized and total cost of the work including the Administrative Fee as set by resolution of City Council for City administrative expenses, a description of the real property upon which the building or structure is or was located and the names and addresses of the persons entitled to notice. (Amend Ord 07-096, 12/18/07)

Section 18.03 Report Transmitted to Hearing Authority - Set for Hearing

Upon completion of the expense report, the Administrator shall present it to the Hearing Authority for consideration. The Hearing Authority shall fix a time, date and place for hearing the report, and any protests or objections. The Administrator shall cause notice of said hearing to be posted upon the property involved, published once in a newspaper of general circulation in the City and served by certified mail, postage prepaid, addressed to the owner of the property as his name and address appear on the last assessment roll of the county, if such so appear, or as known to the Administrator. Such notice shall be given at least ten (10) days prior to the date set for hearing and shall specify the day, hour and place when the Hearing

Authority will hear and pass upon the Administrator's report, together with any objections or protests which may be filed as hereinafter provided by any person interested in or affected by the proposed charge.

Section 18.04 Protests and Objections - How Made

Any person interested in or affected by the proposed report may file written protests or objections with the Administrator at any time prior to the time set for the hearing on the report of the Administrator. Each such protest or objection must contain a description of the property in which the signer thereof is interested and the grounds of each such protest or objection. The Administrator shall endorse on every such protest or objection the date it was received. He shall present such protests or objections to the Hearing Authority at the time set for the hearing, and no other protests or objections shall be considered.

Section 18.05 Hearing of Protests

Upon the day and hour fixed for the hearing, the Hearing Authority shall hear and pass upon the report of the Administrator together with any such objections or protests. The Hearing Authority may make such revision, correction or modification in the report or the charge as it may deem just; and when the Hearing Authority is satisfied with the correctness of the charge, the report (as submitted or as revised, corrected or modified) together with the charge, shall be confirmed or rejected. The decision of the Hearing Authority , on the report and the charge and on all protests or objections, shall be final and conclusive, subject to appeal no later than thirty (30) days after the report is adopted or revised by the Hearing Authority.

Section 18.06 Assessment

A. **General.** The Hearing Authority may thereupon assess said charge against the property involved.

B. **Assessment.** If the Hearing Authority orders that the charge shall be assessed against the property, it shall confirm the charge, cause the same to be recorded and

thereafter, said assessment shall constitute an assessment against and a lien upon the property.

Section 18.07 Contest

The validity of any assessment made under the provisions of this Article shall not be contested in any action or proceeding unless the same is commenced within thirty (30) days after the assessment is placed upon the property as provided herein. Any appeal from a final judgment in such action or proceeding must be perfected within thirty (30) days after the entry of such order by the Hearing Authority.

Section 18.08 Authority for Installation Payment of Assessments with Interest

The Hearing Authority, in its discretion, may determine that assessments in amounts of $500.00 or more shall be payable in not to exceed five (5) equal annual installments. The Hearing Authority determination to allow payment of such assessments in installments, the number of installments, whether they shall bear interest and the rate thereof shall be by order adopted prior to, or at the same time as the confirmation of the assessment.

Section 18.09 Lien of Assessment

A. **Priority.** Immediately upon its recording, the assessment shall be deemed to be complete, the amount assessed shall be payable, and the assessments shall be liens against the lots or parcels of land assessed, respectively. The lien shall be subordinate to all existing assessment liens previously imposed upon the same property and shall be paramount to all other liens except for state, county and municipal taxes, with which it shall be upon a parity. The lien shall continue until the assessment and all interest due and payable thereon are paid.

B. **Interest.** All such assessments remaining unpaid after thirty (30) days from the date of recording shall become delinquent and shall bear interest at the rate

of ten percent (10%) per annum or as allowed by law from and after said date.

C. A lien under this chapter is extinguished when the property owner or other person with an interest in the legal title to the land pays the City the balance due in full. At the time of sale of properties with the aforementioned lien, the lien shall be released without payment if the purchaser's family income meets the current Department of Housing and Urban Development Low or Moderate Income Requirements for the Fort Worth-Arlington Primary Metropolitan Statistical Area in accordance with federal law.

D. At the time of sale of properties with the aforementioned lien, the lien may be assumed if the purchaser is a 26 U.S.C.A. §501(c)(3) not-for-profit entity with the principal office located in Tarrant County, Texas, the primary purpose of which is constructing or rehabilitating single family homes for people who meet the current Department of Housing and Urban Development Low or Moderate Income Requirements for the Fort Worth-Arlington Primary Metropolitan Statistical Area in accordance with federal law. (Amend Ord 04-004, 1/13/04)

ARTICLE XIX

CONSTRUCTION ON LAKE ARLINGTON

Section 19.01 Definitions

"Boathouse" means any unenclosed covered structure or attached appurtenance which is used for the temporary or permanent storage of watercraft or personal property on or over the water.

"Earthwork" means the disturbance of soils associated with filling, clearing, grading or excavation.

"Facilities" mean any building, boathouse, pier or other structure or any combination of structures.

"Lake Arlington" means all of the waters within the Lake Arlington reservoir area that are located within the corporate limits of the City of Arlington.

"Lake Arlington Flowage Easement or Flowage Easement" shall have the meaning assigned by the Lake Arlington Chapter.

"Lake Arlington Reservoir Area or Reservoir Area" shall have the meaning assigned by the Lake Arlington Chapter.

"License agreement" shall have the meaning as assigned by the Lake Arlington Chapter.

"Person" means any natural person, association of persons, partnership, corporation, agent or officer, or other entity.

"Pier" means any pier, wharf, boat dock, gangway, or other platform or structure in or adjoining the water to which vessels may be moored, by which they may be boarded, or on which persons may walk or sit.

"Shoreline" means the edge of the water as established by the 550 foot elevation.

"Shoreline Restoration" shall have the meaning as assigned by the Lake Arlington Chapter.

"Walkways and bridges" means the constructed pedestrian facilities for the purpose of connecting piers and boathouses to the property. Walkways and bridges are located above the 550 feet elevation.

Section 19.02 Permits Required

No person shall erect, construct, enlarge, alter, repair, remove, convert or demolish any retaining wall, walkway, boathouse, or pier; or to excavate, grade, or fill property or cause the same to be done on any property located within the Lake Arlington Flowage Easement or in the Lake Arlington Reservoir Area without first obtaining a permit in accordance with Article IV of this Chapter. No person shall erect, construct or convert any retaining wall, walkway, boathouse, or pier; or to excavate, grade, or fill property or cause the same to be done on any property located within the Lake Arlington Reservoir Area except for structure support poles, piers, anchors or rip rap for slope stabilization. The building official may only issue a permit upon finding that the proposed work complies with the construction standards in this Article and with the building codes as may be applicable. The building official may not issue a permit for any work proposed for new or existing boathouses or piers or other structures unless there is a current annual license agreement approved by the Lake Ordinance Administrator as required in the Lake Arlington Chapter.

Contractors performing work in or on the Lake Arlington Reservoir Area must have on file Contractor's Public Liability Insurance with a combined single limit of not less than Five Hundred Thousand and No/100 Dollars ($500,000.00) per occurrence, with an aggregate of not less than Five Hundred Thousand and No/100 Dollars ($500,000.00). The Registrant shall make the City of Arlington a Certificate Holder and present proof of insurance at the time of registration and all subsequent renewals. Notice of policy cancellations or failure to renew coverage shall be cause for revocation of registration, denial of inspections or cancellation of permits.

In the event provisions in this article conflict with any other provisions in the City Code, the stricter of the two requirements shall take precedent.

Section 19.02.01 Work Within Lake Arlington or the Flowage Easement

When an existing structure within Lake Arlington or the Flowage Easement is to be replaced, repaired, or extended, the existing structure must comply or be brought into compliance with this Article when any of the following apply:

A. The work affects more than fifty percent (50%) of the length of a retaining wall, or

B. The work affects more than fifty percent (50%) of the floor area of the dock/pier, or

C. The work affects more than fifty percent (50%) of the area of a sundeck, or

D. The work affects more than fifty percent (50%) of the area of the roof structure.

EXCEPTION. If the cost of such replacement, repair, or extension does not exceed 50% of the reasonable value of the existing structure, only the portion of the structure replaced, repaired, or extended must conform to the provisions of the ordinance. The applicant has the burden of proof to establish the reasonable value of the existing structure and the cost of the requested replacement, repair, or extension. (Amend Ord 12-011, 4/3/12)

Section 19.02.02 **Appeals to Requirements of Section 19.02.01**

The owner of the premises, or an authorized agent, who seeks to erect or alter a building or structure within Lake Arlington or the Flowage Easement may appeal from a decision of the Building Official specifically regarding Section 19.02.01 to the Director of Water Utilities through the Building Official.

A. The notice of appeal shall be filed within thirty (30) days after the Building Official renders a decision: provided, however, that said Building Official may limit the time for appeal to a shorter period in cases involving buildings or structures that are, in the Building Official's opinion, unsafe or dangerous.

B. Initiating work, progressing with that portion of work which is the particular issue on appeal, or progressing with work which would cover the matter on appeal, shall void such appeal.

C. The Director of Water Utilities, when appealed to, shall conduct a hearing within a reasonable time and no earlier than ten (10) days after sending written notice of the time, location, and purpose of such hearing to the applicant. After such hearing, the Director of Water Utilities may vary the application of any provision of Section 19.02.01 to any particular case when, in its opinion, the enforcement thereof would do manifest injustice and would be contrary to the spirit and purpose of Section 19.02.01 or the public interest, or when, in its opinion, the

interpretation of the Building Official should be modified or reversed for any other reason. A decision of the Director of Water Utilities to vary the application of any provision of Section 19.02.01 or to modify an order of the Building Official shall specify in what manner such variation or modification is made, the conditions upon which it is made and the reasons therefore. The decision shall be in writing. The decision shall be promptly filed in the office of the Building Official and shall be open to the public for inspection. A true and correct copy of the decision shall promptly be sent by mail or otherwise to the appellant and a copy shall be publicly posted in the office of the Building Official for two (2) weeks after the filing thereof.

D. The decision of the Director of Water Utilities shall be final, subject, however, to such remedy as any aggrieved party might have at law or in equity. Any person, firm or corporation aggrieved by any decision of the Director of Water Utilities may present to a court of record a petition, duly verified, setting forth that such decision is illegal in whole or in part, and specifying the grounds of the illegality. Unless such petition (appeal) shall be presented to the court within ten (10) days of the decision of the Director of Water Utilities is mailed or otherwise provided to appellant, the decision of the Director of Water Utilities shall become final.

E. If a decision of the Director of Water Utilities reverses or modifies any decision of the Building Official or varies the application of any provision of Section 19.02.01, the Building Official shall immediately take action in accordance with such decision. (Amend Ord 12-011, 4/3/12)

Section 19.03 **<u>Earthwork</u>**

A. Prior to performing any earthwork within the Lake Arlington Reservoir Area or Flowage Easement, a site plan must be submitted for review and accepted. Permanent structures proposed with the site plan, such as retaining walls, boathouses or piers require a construction permit in accordance with Article IV of this Chapter.

B. The following items shall be included with the site plan submittal:

1. Description of the work.

2. Plan prepared by a licensed Professional Engineer showing existing and proposed grades (topography), easements and structures where applicable.

Existing topography shall be verified by a Registered Public Land Surveyor.

3. Cross-section(s) of any proposed excavation or fill at intervals sufficient to determine the volume of earth to be placed within or removed from the Flowage Easement.

4. Earthwork calculations demonstrating the volume of fill to be placed within the Flowage Easement and/or Lake Arlington.

5. Copy of 404 permit from the U.S. Army Corps of Engineers, as necessary.

C. Plans which show that the work has been completed as originally intended on the approved site plan (Record Drawings) must be provided and accepted upon completion of earthwork activities. The record drawing must include a verification statement or seal prepared by a Registered Public Land Surveyor.

Section 19.04 Design and Construction Requirements for Retaining Walls

A. Engineering design requirements.

1. All retaining wall plans must be designed and sealed by a licensed professional engineer.

2. If any part of the retaining wall is located at or below 560 feet above mean sea level, then the design and construction of the entire retaining wall must comply with this Article.

3. The height of a retaining wall is measured from the bottom of the footing or foundation to the top of the wall.

4. Retaining walls shall be constructed in stepped or terraced design. The maximum exposed height for a retaining wall that is located closest to the water's edge shall be no more than six (6) feet. Subsequent terraced retaining walls shall be no more than four (4) feet in height.

   EXCEPTION. If physical limitations on the site or structural engineering conditions make terracing technically unfeasible. In any case the maximum height of any retaining wall or retaining wall segment is six (6) feet.

5. When walls are terraced, the upper wall shall be separated from the lower wall by a minimum of five (5’) feet measured horizontally.

6. A bio-retention planting strip is required in the areas between terraced retaining walls and behind the top of the upper retaining wall. The planting strip shall be a minimum five feet (5’) from the back and top of the retaining wall for the entire width of the retaining wall. The bio-retention planting strip shall be planted with deep rooted native or adapted grasses, ground cover and/or shrubs. Approved Lake Arlington Planting Materials are listed in the Lake Arlington Chapter and below.

Table 19A - Approved Lake Arlington Planting Materials		
Buffalo Grass	Bouteloua dactyloides	grass
Indian Paintbrush	Castilleja indivisa	grass
Plains coreopsis	Coreopsis lanceolata	grass
Lindheimer's Muhly	Muhlenbergia lindheimeri	grass
Indian Blanket	Gaillardia pulchella	grass
Annual Phlox	Phlox drummondii	grass
Island Sea Oats	Chasmanthium latifolium	tall grass
Purple Cone Flower	Echinacea pallida	tall grass
Black-eyed Susan	Rudbekia hirta	tall grass
Maidenhair Fern	Adiantum capillus-veneris	ground cover
Frogfruit	Phyla nodiflora	ground cover
Spiderwort	Tradescantia spp.	ground cover
Wax Myrtle	Myrica cerifera	shrub
Dwarf Palmetto	Sabal minor	shrub
Turk's Cap	Malvaviscus arboreus var. drummondii	shrub

B. Retaining wall materials.

1. The following materials are approved for the construction or veneer of retaining walls:

   a. Interlocking masonry, stone, or brick;

   b. Poured decorative concrete; and

   c. Aesthetic sheet piling designed specifically for shoreline retaining walls.

2. Rock gabion or rock rip-rap is required at the exposed foot of the lowest retaining wall and may only extend one foot above and below the foot of the wall. Rock or rip-rap shall consist of rocks ranging in sizes from eight inches in diameter to twelve inches in diameter and must be installed over a non-woven structural fabric.

3. The following materials are expressly prohibited for the construction or veneer of retaining walls:

   a. concrete bags;

   b. plain concrete

   c. reclaimed or broken concrete;

   d. commercial sheet piles;

   e. other metal; or

   f. wood.

Section 19.05 **Design and Construction Requirements for Piers and Boathouses**

A. All piers and boathouse in Lake Arlington shall be considered accessory structures. A primary structure must be present on the lot to which a pier, boathouse and/or walkway is erected or constructed.

B. All piers and boathouses must be designed and sealed by a licensed professional engineer. The following specific criteria must be incorporated in the engineer's design and be included on the construction documents:

   1. All piers and/or boathouses shall be designed to withstand the loads as specified in the Building Code,

   2. All piers and/or boathouses shall be designed to withstand a minimum of four foot high wave action and the design wind load simultaneously;

3. Designs shall include the impacts of wind and wave action effects of boats attached to the pier and/or boathouse.

4. Floating piers and boathouses shall be designed with anchorage footing and piers to remain in place to prevent the structure from floating or rising above the 100-year flood elevation; (Amend Ord 12-011, 4/3/12)

5. Cables and chains used in anchoring systems shall be designed with a minimum working load safety factor of 3.0 for cables and 2.0 for chains;

6. Flotation devices for boathouses, walkways and bridges shall be designed and/or manufactured to support the dead load and live load as a fixed structure.

C. Building zone width. The building zone width is determined by the extension of the side property lines of a lot into the lake less the required minimum side setback. Minimum side setbacks for piers and boathouses from the extended side property lines are as set forth in Table 19B - Buildable Zone Width. See Figure 19A - Buildable Zone Width for illustration purposes.

Table 19B - Buildable Zone Width

LOT WIDTH	MIN SIDE SET BACK
Less than 50 feet	5 feet
50 feet to 69 feet	10 feet
70 feet to 99 feet	15 feet
100 feet or more	20 feet

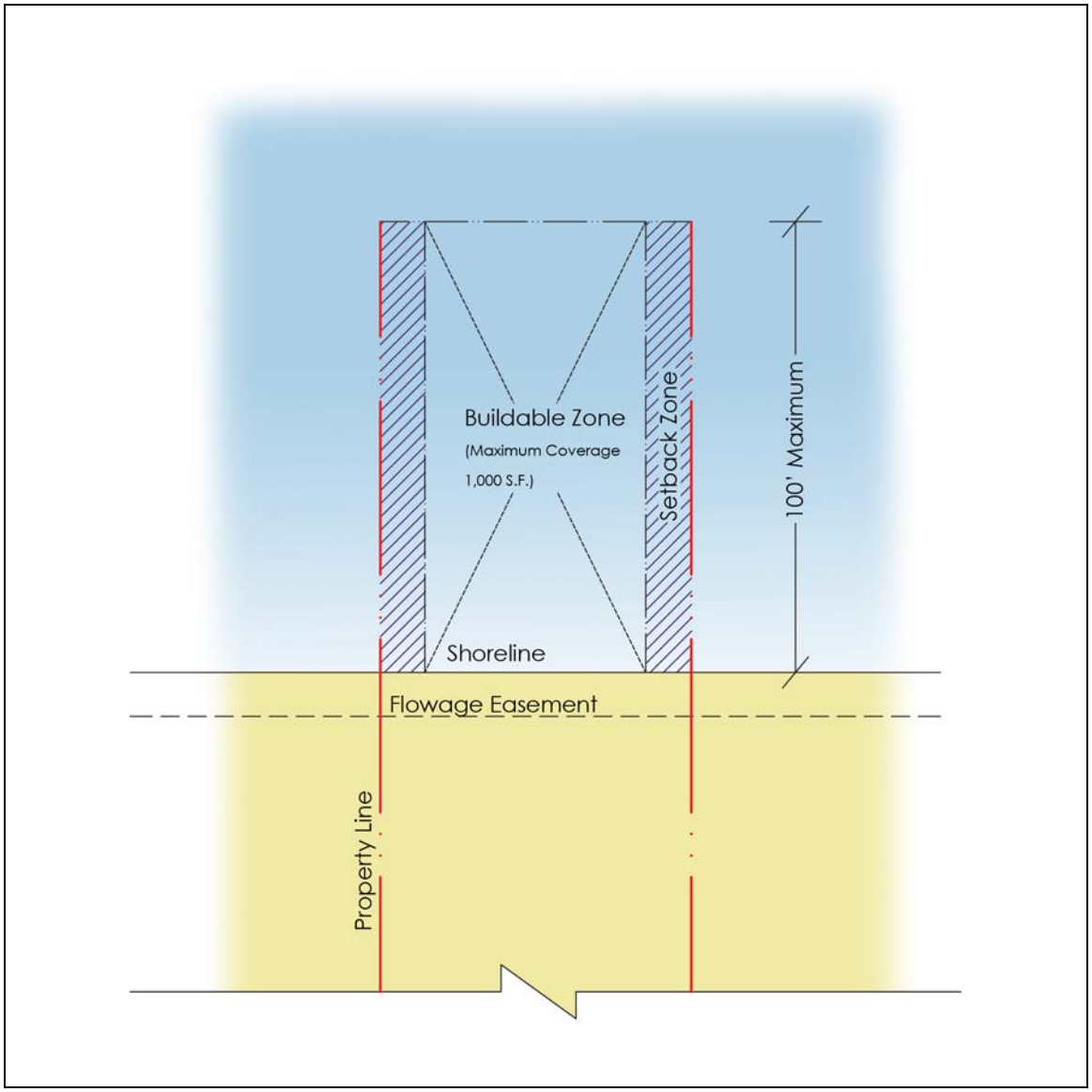

Figure 19A - Buildable Zone Width Illustration

D. Maximum structure area. The maximum horizontal area of structures incidental to a single property (piers and/or boathouses) is 1,000 square feet.

EXCEPTION: For property owners that remove existing retaining walls and provide shoreline restoration; or, for property owners that elect to preserve existing natural shoreline areas, the maximum area of structures may be 1,250 square feet. Shoreline Restoration and Preservation projects must comply with the Lake Arlington Chapter.

E. Maximum length into the Lake. Piers and/or boathouses shall not extend into the lake more than 100 feet from the shoreline.

EXCEPTIONS:

1. If the elevation of the Lake bottom at the 100 foot limit is higher than 545 feet above mean sea level then the dock may extend to the point where the Lake bottom is 545 feet above mean sea level to a maximum length of 150 feet as measured from the shoreline regardless of Lake Bottom elevation. This exception may not apply in narrow areas of the reservoir.

2. In narrow areas of the reservoir (See figure 19B - Map of Narrow Areas), no structure shall occupy more than one third (1/3) of the channel width and in no case shall a structure extend out into the reservoir to a point that is more than 20 feet from the centerline of the channel. For the purposes of this provision, the channel width is measured from water's edge at the normal lake elevation of 548 feet mean sea level. See Figure 19C - Narrow Channel Illustration.

3. For property owners that remove existing retaining walls to undergo a shoreline restoration effort; or, for property owners that elect to preserve existing natural shoreline areas the maximum length of a pier may be extended to 125 feet. This exception may not apply in narrow areas of the reservoir.

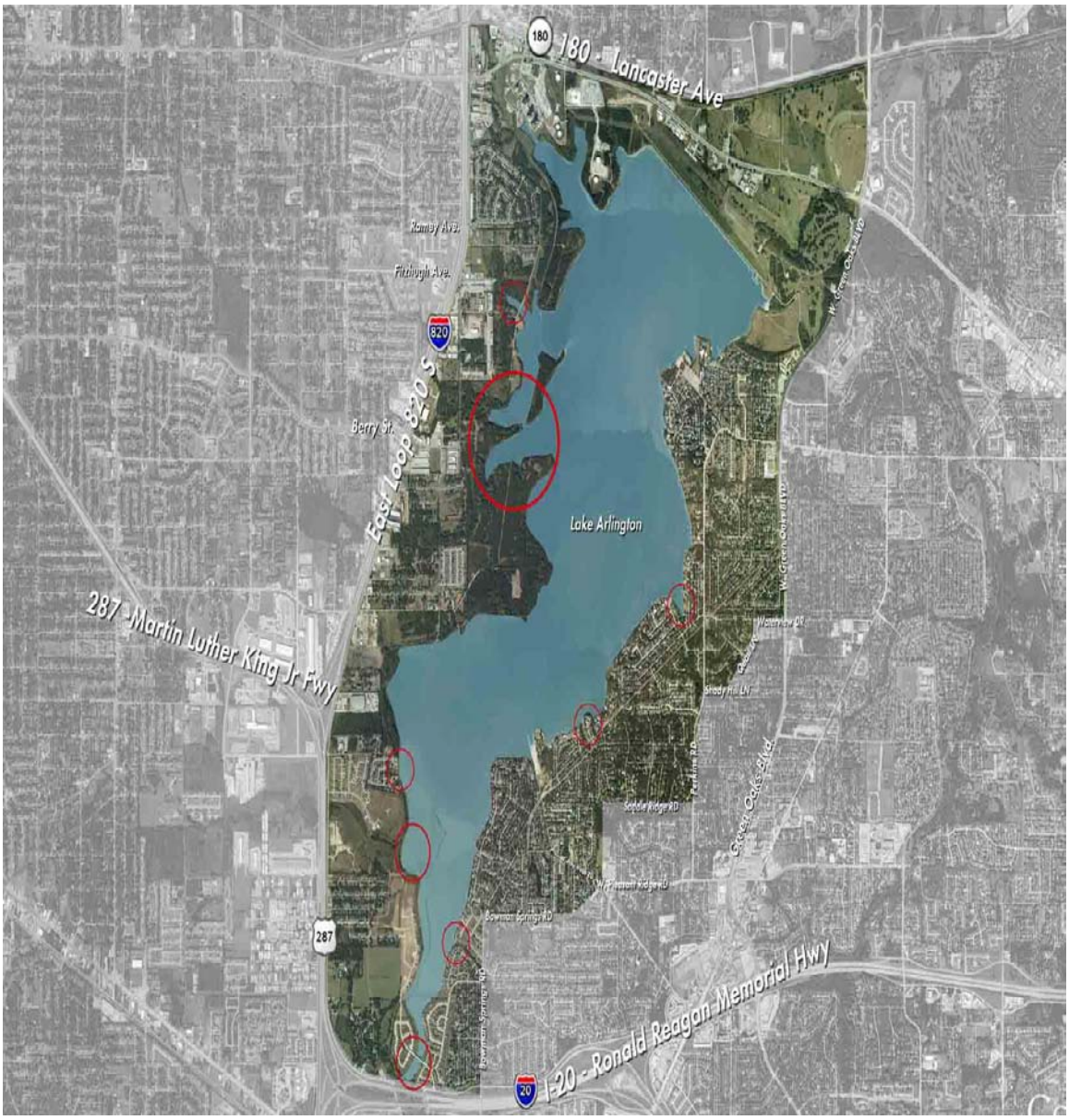

Figure 19B - Map of Narrow Areas

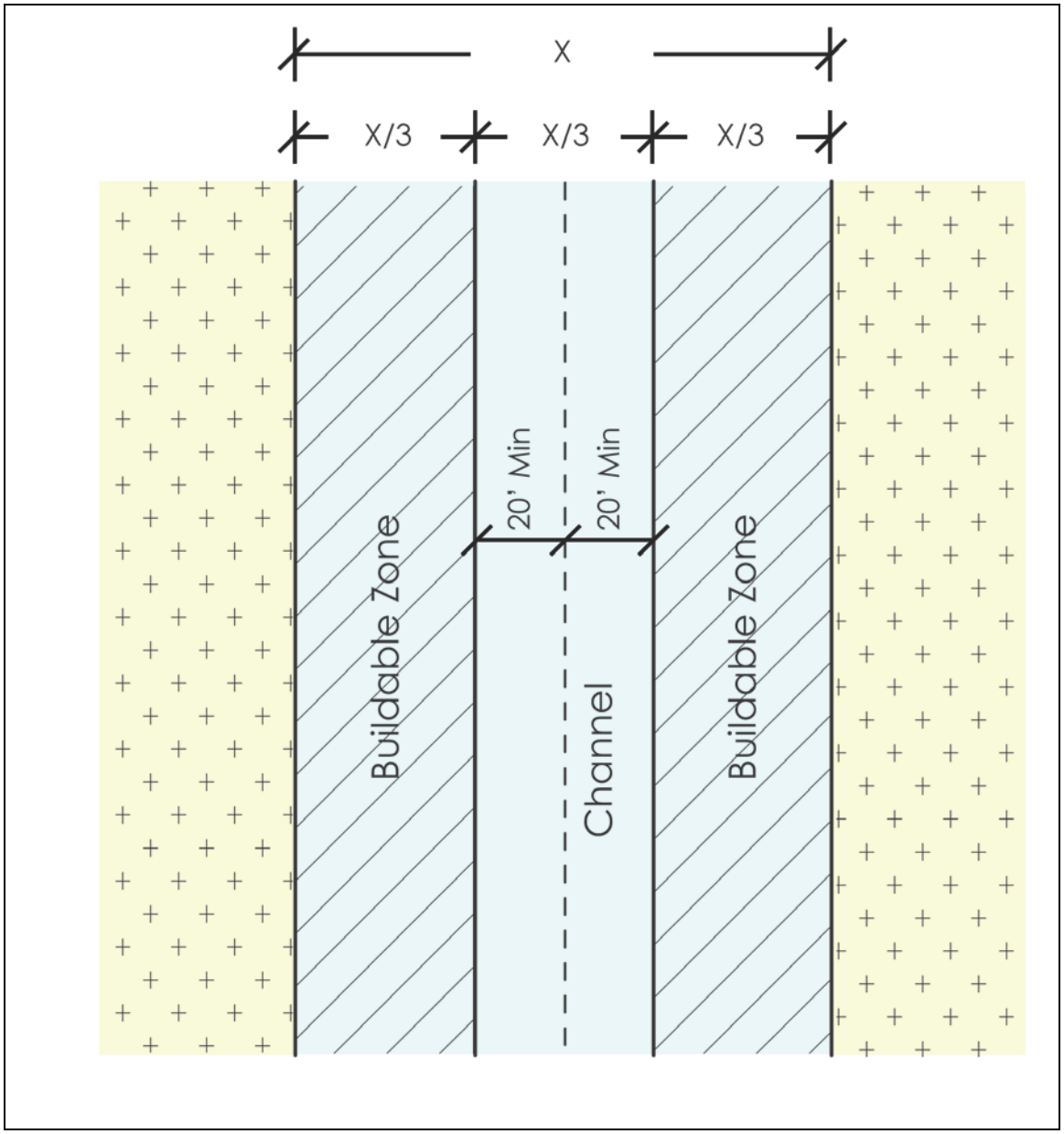

Figure 19C - Narrow Channel Illustration

F. All piers and boathouses shall have lights in accordance with this subsection. These requirements apply to any piers and boathouses that extend into the Lake more than eight feet from a shoreline measured perpendicular to the shoreline.

1. Piers and boathouses must be continuously lighted with amber lights between sunset and sunrise each day.

2. Piers and boathouses must have at least one light station. Except as otherwise provided in this subsection, the light station must be located on the end of the pier and/or boathouse and on the side that is farthest from and parallel to the shoreline. The light must be visible to a properly approaching watercraft.

3. A pier or boathouse that extend thirty feet or more from the shoreline must have at least one light station on each side of the pier and/or boathouse not facing the shoreline.

4. A pier or boathouse that extends fifty feet or more from the shoreline must have light stations from the shoreline to the end of the pier and/or boathouse at intervals of not more than twenty five feet except that a light station may not be located within eight feet of the shoreline.

5. Each light station required by this subsection must have a two-bulb fixture with two working light bulbs between 7.5 and 25 watts. Light bulbs or covers must be amber and white light shall not radiate from the fixture. Light stations must be controlled by only a photoelectric cell to insure dusk to dawn continuous operation.

6. All electrical wiring on any pier and/or boathouse shall be in accordance with the City of Arlington electrical code for marine applications.

7. Other lights installed that are not required by this subsection may only cast light down and shall not cast light outward from the pier.

8. Any pier and/or boathouse that require lights under this subsection shall provide temporary lighting during construction and until the permanent lighting is installed.

G. Address. Each pier and/or boathouse shall have an address placard stating the street address and the street name of the primary residence associated with the structure. The address placard shall be clearly legible from the lake side of the structure. The lettering shall be a minimum of 6-inch high and be made of reflective material so that the address can be read at night. Placards shall be made of cast aluminum and be rectangular in shape.

H. Toilet. Toilet facilities of any type are prohibited on any boathouse or pier.

I. Water. The installation of a potable water line shall comply with the plumbing code.

J. Electrical. The installation of any electrical components shall comply with the electrical code.

K. Specific design requirements for boathouses.

1. Single Story. All boathouses are limited to a single story (lower deck) and a sundeck (upper deck) or roof.

2. Height. The maximum height of any boathouse is thirteen feet as measured vertically from the pier walking surface to the top plate line.

3. Pitch. The maximum pitch for any sloped roof is 3:12.

4. Roofs. Flat roofs shall have a minimum roof pitch of 1/2:12. The upper flat roof may be constructed for use as a sundeck. When the upper deck is utilized as a sundeck, the following regulations apply:

a. The sundeck may not have a permanent roof or covering.

b. The sundeck is accessible by stairway and handrails constructed in accordance with the building code.

c. The sundeck area is protected with a surrounding guardrail constructed in accordance with the building code.

d. Except for the required guardrails, no other vertical construction is permitted on the upper deck.

5. Enclosed boathouses are prohibited. Solid sides on the boathouse are permitted at a maximum of two feet downward from the top plate. No additional materials (i.e. lattice, fencing, bars, screen fabric, doors, glass, etc.) may be installed below the two foot sidewalls.

6. A single enclosed storage area is permitted only on the lower deck of a boathouse. The enclosed storage area may only be used for the purpose of storing items such as fishing tackle, skis and life jackets. Products

considered hazardous material or any material which has a warning label prohibiting its use or storage near water and/or public water supplies is prohibited. The maximum area allowed for the enclosed storage shall be 32 square feet.

L. Design criteria for piers and/or boathouses.

1. The use of wood piles is prohibited;

2. Metal piles shall be a minimum of three inches inside diameter schedule 40 pipe. Such piles shall be driven by a pile hammer to a point of resistance. Such piles shall be driven in pairs, one on either side of the structure and braced. Such piles shall be spaced a maximum of twelve feet center to center.

3. Flotation structures shall be anchored with solid units that will provide the following anchorage:

   a. All anchors shall be of masonry, concrete, or steel and shall be securely fastened to the pier or boathouse by cable, chain, or other approved methods.

   b. All piers and boathouses shall be anchored to the shore line.

   c. Piers less than fifty feet in length shall be anchored on each corner designed to support one-fourth of the total dead load plus one-eighth the total live load.

   d. Piers fifty feet or more in length shall also be anchored at the midpoint of the pier.

4. Required Water Proofing: All wood below the 100-year flood elevation shall be approved pressure-preservative-treated wood as defined in the building code. All metal, including bolts, lag bolts, and fasteners, shall be galvanized or factory painted and listed for immersion in water. Creosote treated wood is prohibited. (Amend Ord 12-011, 4/3/12)

5. Floating structures and flotation. Flotation material shall be extruded polystyrene, expanded polystyrene, or a copolymer of polyethylene and polystyrene and have the following characteristics:

a. A minimum density of 0.9 pounds per cubic foot and be of consistent quality throughout the float.

b. Beads shall be firmly fused together with no voids inside the encasement.

c. Flotation material shall have a water absorption rate of less than 3.0 pounds per cubic foot over seven days when tested by the Hunt Absorption Test.

d. All flotation material shall be encased in solid polyethylene or a polyurethane type coating, both of which shall be watertight and have a nominal thickness of 0.125 inches.

e. Drums made of plastic or metal, whether new or recycled, are prohibited from use as an encasement or float.

f. All floats shall be warranted for a minimum of fifteen (15) years against sinking, becoming waterlogged, cracking, peeling, fragmenting, or losing beads, and shall not be prone to damage by animals.

M. Shoreline Restoration and Preservation. Shoreline Restoration and Preservation shall be conducted as provided for in the Lake Arlington Chapter. (Amend Ord 11-043, 8/16/11)

ARTICLE XX

PENALTY

20.01 Penalty

A person who violates any provision of this Chapter by performing an act prohibited or by failing to perform an act required is guilty of a misdemeanor; each day the violation continues shall be a separate offense.

1. If the definition of an offense under this Chapter does not prescribe a culpable mental state, then a culpable mental state is not required. Such offense shall be punishable by a fine not to exceed Five Hundred Dollars and No Cents ($500.00). Although not required, if a culpable mental state is in fact alleged in the charge of the offense and the offense governs fire safety, zoning, or public health and sanitation, including dumping of refuse, such offense shall be punishable by a fine not to exceed Two Thousand Dollars and No Cents ($2,000.00).

2. If the definition of an offense under this Chapter prescribes a culpable mental state and the offense governs fire safety, zoning, or public health and sanitation, including dumping of refuse, then a culpable mental state is required and the offense shall be punishable by a fine not to exceed Two Thousand Dollars and No Cents ($2,000.00).

(Amend Ord 11-043, 8/16/11)

Published 06/25 & 07/02/92

ORDINANCE NO. 92-62

AN ORDINANCE AMENDING THE **"CONSTRUCTION"** CHAPTER OF THE CODE OF THE CITY OF ARLINGTON, TEXAS, 1987, THROUGH THE ADDITION OF ARTICLE XVII THEREOF, ENTITLED **DANGEROUS BUILDINGS**, PROVIDING FOR THE DEFINITION OF DANGEROUS BUILDING; PROVIDING FOR A PUBLIC HEARING; PROVIDING FOR A CIVIL PENALTY OF UP TO $2,000 PER DAY; PROVIDING FOR ABATEMENT OF DANGEROUS BUILDINGS; PROVIDING FOR A FINE OF UP TO $2,000 FOR EACH OFFENSE IN VIOLATION OF THE ORDINANCE; PROVIDING THIS ORDINANCE BE CUMULATIVE; PROVIDING FOR SEVERABILITY; PROVIDING FOR GOVERNMENTAL IMMUNITY; PROVIDING FOR INJUNCTIONS; PROVIDING FOR PUBLICATION AND BECOMING EFFECTIVE TEN DAYS AFTER FIRST PUBLICATION

BE IT ORDAINED BY THE CITY COUNCIL OF THE CITY OF ARLINGTON, TEXAS:

1.

That the "Construction" Chapter of the Code of the City of Arlington, Texas, 1987, is hereby amended through the addition of Article XVII thereof, entitled **Dangerous Buildings**, so that hereafter said article shall be and read as follows:

ARTICLE XVII

DANGEROUS BUILDINGS

Section 17.01 Authority

This article is adopted pursuant to the authority provided by Chapter 214, Subchapter A, of the Local Government Code.

Section 17.02 **Dangerous Building Defined**

Section 302 of the 1991 edition of the Uniform Code for the Abatement of Dangerous Buildings, as published by the International Conference of Building Officials, is hereby adopted but modified and amended by the following, so that Section 302, entitled "Dangerous Buildings," shall read as follows:

Any building which is a hazard to the public health, safety and welfare, and which is dilapidated, substandard or unfit for human habitation as hereinafter described, shall be deemed to be a dangerous building:

A. When any door, aisle, passageway, stairway or other means of exit is not of sufficient width or size or is not so arranged as to provide safe and adequate means of exit in case of fire or panic;

B. When the walking surface of any aisle, passageway, stairway or other means of exit is warped, worn, loose, torn or otherwise unsafe so that it would not provide safe and adequate means of exit in case of fire or panic;

C. When the stress in any materials, member or portion thereof, due to all dead and live loads, is more than one and one half (1 1/2) times the working stress or stresses allowed in the Building Code for new buildings of similar structure, purpose or location;

D. When any portion has been damaged by fire, earthquake, wind, flood or by any other cause, to such an extent that the structural strength or stability thereof is materially less than it was before such catastrophe and is less than the minimum requirements of the Building Code for a newly constructed building of like area, height and occupancy;

E. When any portion or member or appurtenance is likely to fail, or to become detached or dislodged, or to collapse and thereby injure persons or damage property;

F. When any portion of the building, or when any member, appurtenance or ornamentation on its exterior is not of sufficient strength or stability, or is not anchored,

attached or fastened in place so as to be capable of resisting a wind pressure of one half (1/2) of that specified in the Building Code for a newly constructed building of like area, height and occupancy, without exceeding the working stresses permitted in the Building Code for such buildings;

G. When any portion has wracked, warped, buckled or settled to such an extent that walls or other structural portions have materially less resistance to winds or earthquakes than is required in the case of similar new construction;

H. When the building or any portion thereof is likely to partially or completely collapse because of:

1. Dilapidation, deterioration or decay;

2. Faulty construction;

3. The removal, movement or instability of any portion of the ground necessary for the purpose of supporting such building;

4. The deterioration, decay or inadequacy of its foundation; or

5. Any other cause;

I. When, for any reason, the building or any portion thereof is manifestly unsafe for the purpose for which it is being used;

J. When the exterior walls or other vertical structural members list, lean or buckle to such an extent that a plumb line passing through the center of gravity does not fall inside the middle one third of the base;

K. When the building, exclusive of the foundation, shows thirty-three percent (33%) or more damage or deterioration of its supporting member or members, or fifty percent (50%) damage or deterioration of its nonsupporting members, enclosing or outside walls or coverings;

L. When the building is damaged, dilapidated or deteriorated to the extent that it is an attractive nuisance to children;

M. If the building was constructed or is maintained in violation of any specific requirement or prohibition applicable to such building provided by the Building Code, or of any law or ordinance of this state or City relating to the condition, location or structure of buildings;

N. If the building has in any nonsupporting part, member or portion less than fifty percent (50%), or in any supporting part, member or portion less than sixty-six percent (66%) of the strength, fire-resisting qualities or characteristics, or weather-resisting qualities or characteristics required by law for a newly constructed building of like area, height and occupancy;

O. If the building is used or intended to be used for dwelling purposes, and because of inadequate maintenance, dilapidation, decay, damage, faulty construction or arrangement, inadequate light, air or sanitation facilities, or otherwise, is determined by the Building Official or his authorized representative to be unsanitary, unfit for human habitation or in such a condition that is likely to cause sickness or disease;

P. If the building, because of obsolescence, dilapidated condition, deterioration, damage, inadequate exits, lack of sufficient fire-resistive construction, faulty electric wiring, gas connections or heating apparatus, or other cause, is determined by the Building Official or his authorized representative to be a fire hazard;

Q. When any portion of an abandoned building or structure remains on a site after the demolition or destruction of the building or structure;

R. When the building or its curtilage contains accumulations of litter; refuse; garbage; rubbish; junk; animal carcasses; decaying flesh, fish, fowls or vegetables; stagnant water or other stagnant liquid; flammable liquids; slops; trash; or other deposits or substances, which are unwholesome, filthy, unsightly, offensive or unsanitary; likely to create or engender

disease; likely to harbor insects or rodents; or likely to pollute storm water;

S. When a building which is partially constructed has not had any significant construction work done on it in the preceding six (6) months, and it is not secured by a fence or other means to prevent children and vagrants from entering the building; or

T. When a building which is partially constructed has not had any significant construction work done on it in the preceding six (6) months, and all building materials and construction equipment and tools have neither been removed from the construction site nor secured at the site to prevent their use by children; their theft; their deterioration; their vandalism; or their harborage of rodents or insects.

Section 17.03 Commencement of Hearing

A. **Scheduling of Hearing**. When the Building Official has inspected or caused to be inspected any building and has determined that such building is a dangerous building, he may schedule a hearing before the Housing Advisory and Appeals Board (the Board) to determine whether such building should be vacated, repaired, removed and/or demolished.

B. **Issuance of Notice**. The Building Official shall issue a notice of hearing to the owner of the building and to each mortgagee and lienholder of the building and of the property on which it is located, as shown by the records in the office of the county clerk for Tarrant County.

C. **Contents of Notice**. The notice shall contain:

1. The street address or legal description of the building;

2. A statement that the Building Official has found the building to be dangerous, and a brief description of the conditions found to render the building dangerous under the provisions of Section 17.02; and

3. A statement specifying the date, time and place of the hearing.

D. **Service of Notice**.

1. Notice of the hearing shall be given by certified mail, return receipt requested, or by personal service. If the address of any person entitled to notice cannot be ascertained, or if service cannot be made by mail or in person after a reasonable attempt, service shall be made by posting a copy of the notice on the front door of each improvement situated on the affected property or as close to the front door as practicable.

2. The notice shall be mailed and/or posted before the tenth (10th) day before the date of the hearing. Service by certified mail shall be effective on the date of mailing.

3. Proof of service shall be certified at the time of service by a written declaration executed by the persons effecting service, declaring the date, time and manner in which service was made. The declaration, together with any receipt card returned in acknowledgment of receipt by certified mail shall be affixed to the copy of the notice retained by the Building Official.

Section 17.04 Conduct of Hearing

A. **Failure to Appear**. If the owner of the building fails to appear at the hearing after being duly served, the Board shall conduct the hearing as if the owner personally appeared.

B. **Subpoena Power**. Witnesses may be subpoenaed in accordance with the procedures set forth in Article XI of the "Administration" Chapter.

C. **Quorum**. A majority of the members of the Board shall constitute a quorum for the purposes of holding a hearing, and an affirmative vote by three (3) members of the Board shall be required for the rendering of

decisions or the issuance of orders authorized under this article.

D. **Procedure**. The Board shall be authorized to establish rules and regulations for the conduct of hearings, if such are consistent with this article and state law.

E. **Decisions and Orders**.

1. After all evidence has been presented at the hearing, the Board shall determine whether the building is a dangerous building. If more than one (1) building is located on a property and is the subject of the hearing, the Board shall make a separate determination for each building.

2. a. If the building is declared dangerous under Section 17.02, except Subsections (Q), (R), (S) and (T), the Board shall order the owner, at his option, to repair, remove or demolish the building. The Board shall specify a reasonable period of time for the owner to do so.

   b. If the building is declared dangerous under Subsection 17.02(Q), the Board shall order the owner to remove or demolish the building, and shall specify a reasonable period of time for the owner to do so.

   c. If the building is declared dangerous under Subsection 17.02(R), the Board shall order the owner to remove the accumulated matter, and shall specify a reasonable period of time for the owner to do so.

   d. If the building is declared dangerous under Subsection 17.02(S), the Board shall order the owner, at his option, to secure, demolish or remove the building, and shall specify a reasonable period of time for the owner to do so.

   e. If the building is declared dangerous under Subsection 17.02(T), the Board shall order the owner, at his option, to secure or remove

all building materials, equipment and tools, and shall specify a reasonable period of time for the owner to do so.

3. If necessary to protect the health, safety and welfare of the building's occupants, the Board shall order the building vacated. If the condition of the building is due to neglect or to intentional or negligent acts by the owner, the Board shall order the owner to relocate the occupants at his reasonable expense and in a reasonable manner. The Board shall specify a reasonable period of time for the completion of the relocation.

4. The Board shall also order an additional reasonable period of time for all mortgagees or lienholders to comply with the order should the owner fail to comply.

5. The Board shall also order a civil penalty that the City may assess if the owner fails to repair, remove or demolish the building in accordance with the Board's order. Such penalty shall not exceed the amount of Two Thousand Dollars and No Cents ($2,000.00) per day that the building is out of compliance with the order.

Section 17.05 **<u>Contents of Order</u>**

A. An order issued by the Board shall be in writing and shall set forth the decisions of the Board made pursuant to Section 17.05(E).

B. An order to repair shall set forth those items that need to be repaired.

C. An order shall also contain the following statement:

> "It is further ORDERED that if the owner fails to comply with any part of this order by the specified dates, and if any of the mortgagees or lienholders fail to comply with the order in the owner's stead and by the specified dates, the City shall be authorized

at its discretion to vacate, secure, repair, remove and/or demolish the building(s) at its own expense. Alternatively, the City is authorized to assess a civil penalty on the owner in the amount of _____ _____($_____) per day for each day that the building continues to be in violation of this order. Such costs or penalty shall accrue interest at a rate of ten percent (10%) per annum. The City shall have all remedies provided by law to recover such costs, penalties and interest, and shall be entitled to place a lien on the property unless it is a homestead protected by the Texas Constitution."

D. An order shall be signed by the chairperson or acting chairperson of the Board.

E. A copy of the order shall be sent to the building's owner by regular mail or delivered in person.

Section 17.06 <u>Failure to Comply With Order</u>

A. If the owner of a building declared dangerous fails to comply with an order of the Board within the allotted time, the Building Official shall cause a copy of the Board's order to be sent by regular mail to each lienholder and mortgagee as was determined pursuant to Section 17.03(B). This shall constitute notice to the lienholders and mortgagees that the owner has failed to comply with the order.

B. If the lienholders and mortgagees fail to comply with the order within the time allotted to them by the Board, the Building Official may:

1. Vacate, secure, repair, remove and/or demolish the building at the City's expense; or

2. Assess a civil penalty against the owner of the building, as provided by the Board, for failure to comply with the order.

C. The Building Official is authorized to repair a building only to the extent necessary to bring the building into compliance with minimum standards, and only if the building is a residential building with ten (10) or fewer units.

D. The Building Official is further authorized to ask the City Attorney to bring suit against the owner in a Tarrant County district court to request that a receiver be appointed to rehabilitate the property.

Section 17.07 <u>Liens</u>

A. If the City assesses a civil penalty pursuant to Section 17.06(B)(2), or if the City incurs expenses under Section 17.06(B)(1) or (C), the City may assess the expenses or penalty on and has a lien against the land on which the building was located, unless the land is a homestead protected by the Texas Constitution.

B. A lien imposed pursuant to this article is a privileged lien subordinate only to tax liens and all previously recorded bona fide mortgage liens.

C. The lien arises and attaches to the property at the time the notice of the lien is recorded and indexed in the office of the county clerk for Tarrant County. The notice shall contain the name and address of the owner if that information can be determined; a legal description of the land on which the building was located; the amount of expenses incurred by the City or the civil penalty and the balance due.

D. A lien is extinguished when the property owner or other person with an interest in the legal title to the land pays the City the balance due in full.

Section 17.08 <u>Notice and Collection of Penalty and Expenses</u>

A. If the City incurs expenses under Section 17.06(B)(1) or (C) the Building Official shall cause a statement to be sent to the owner, setting forth the amount of the expenses and the interest accrued to date. The Building Official shall thereafter cause an annual statement

to be sent to the owner until the expenses and interest are paid in full.

B. If the City assesses a civil penalty pursuant to Section 17.06(B)(2), the Building Official shall cause a notice to be sent to the owner that the City has begun assessing the penalty provided by the order. Thereafter, the Building Official shall cause a monthly statement to be sent to the owner, setting forth the amount of the accrued penalty and interest, until the penalty and interest is paid in full.

C. A civil penalty or assessment for expenses shall accrue interest at the rate of ten percent (10%) per annum from the date of assessment until paid in full.

D. The City shall be entitled to all remedies provided by law for the collection of debt in order to recover penalty, expenses and interest. However, the City shall not be entitled to foreclose a lien for repair expenses if the property on which the repairs were made is occupied as a residential homestead by a person sixty-five (65) years of age or older.

Section 17.09 <u>Other Enforcement</u>

A. An owner who fails to comply with an order of the Board shall be guilty of a misdemeanor punishable by a fine not to exceed Two Thousand Dollars and No Cents ($2,000.00).

B. Each day that a violation continues shall constitute a separate offense.

C. A criminal prosecution shall be in addition to any civil remedies to which the City is entitled. The remedies provided by this article shall be in addition to the remedies provided by this chapter or any other applicable ordinance or statute.

2.

Any person, firm, corporation, agent or employee thereof who violates any of the provisions of this ordinance

shall be guilty of a misdemeanor and upon conviction thereof shall be fined an amount not to exceed Two Thousand Dollars and No Cents ($2,000.00) for each offense. Each day that a violation is permitted to exist shall constitute a separate offense.

3.

This ordinance shall be and is hereby declared to be cumulative of all other ordinances of the City of Arlington; and this ordinance shall not operate to repeal or affect any of such other ordinances except insofar as the provisions thereof might be inconsistent or in conflict with the provisions of this ordinance, in which event such conflicting provisions, if any, in such other ordinance or ordinances are hereby repealed.

4.

If any section, subsection, sentence, clause or phrase of this ordinance is for any reason held to be unconstitutional, such holding shall not affect the validity of the remaining portions of this ordinance.

5.

All of the regulations provided in this ordinance are hereby declared to be governmental and for the health, safety and welfare of the general public. Any member of the City Council or any City official or employee charged with the enforcement of this ordinance, acting for the City of Arlington in the discharge of his duties, shall not thereby render himself personally liable; and he is hereby relieved from all personal liability for any damage that might accrue to persons or property as a result of any act required or permitted in the discharge of his said duties.

6.

Any violation of this ordinance can be enjoined by a suit filed in the name of the City of Arlington in a court of competent jurisdiction, and this remedy shall be in addition to any penal provision in this ordinance or in the Code of the City of Arlington.

7.

The caption and penalty clause of this ordinance shall be published in a newspaper of general circulation in the City of Arlington, in compliance with the provisions of Article VII, Section 15, of the City Charter. Further, this ordinance may be published in pamphlet form and shall be admissible in such form in any court, as provided by law.

8.

This ordinance shall become effective ten (10) days after first publication as described above.

PRESENTED AND GIVEN FIRST READING on the 9th day of June, 1992, at a regular meeting of the City Council of the City of Arlington, Texas; and GIVEN SECOND READING, passed and approved on the 16th day of June, 1992, by a vote of 8 ayes and 0 nays at a regular meeting of the City Council of the City of Arlington, Texas.

RICHARD E. GREENE, Mayor

ATTEST:

CINDY KEMP, City Secretary

APPROVED AS TO FORM:

JAY DOEGEY, City Attorney

BY

62 1st 6/9/92

Staff Report to Mayor and City Council

Date	Reference Number	Subject
6/9/92	92-A-475	ADOPTION OF THE DANGEROUS BUILDINGS CODE

BACKGROUND

Staff has prepared an ordinance revision to the Construction Chapter of the City Code entitled "Dangerous Buildings". Adoption of the proposed amendment will ensure that the City can require the repair or demolition of substandard structures as well as address specific safety hazards that are not covered by existing ordinance.

DISCUSSION

In response to the direction of Council to develop such an ordinance, the Code Enforcement Division has completed its review and examination of the 1991 edition of the Uniform Code for the Abatement of Dangerous Buildings, as published by the International Conference of Building Officials, and proposes its adoption with amendments.

The scope of this ordinance allows the City a greater authority to review substandard buildings, in part, through the scheduling of public hearings before the Housing Advisory and Appeals Board. During these Hearings, the Board determines if properties are substandard and dangerous, and whether or not they should be vacated, repaired, removed or demolished.

In the event that a Hearing is conducted and abatement procedures are required on behalf of the City, a lien may be attached to the property for the collection of all project expenses.

RECOMMENDATION

The Community Development Department respectfully recommends the adoption of Section 302 of the Uniform Code for the Abatement of Dangerous Buildings, as amended. Staff is prepared to respond to any questions that the Council may have.

Originating Department Head: CHARLES CLAWSON EXT. 6500	Disposition by Council: ☐ Approved
For Additional Information Contact: JACK THOMPSON EXT. 5986	☐ Other (Describe)

ORDINANCE NO. 94-03

AN ORDINANCE AMENDING THE "CONSTRUCTION" CHAPTER OF THE CODE OF THE CITY OF ARLINGTON, TEXAS, 1987, THROUGH THE REPEAL OF THE EXISTING **ARTICLE I** THEREOF, AND THE ADOPTION OF A NEW ARTICLE I, ENTITLED, BUILDING CODE, RELATIVE TO THE ADOPTION OF THE **1991 UNIFORM BUILDING CODE** WITH CERTAIN DELETIONS, AMENDMENTS AND ADDENDA; AND THROUGH THE AMENDMENT OF **ARTICLE IV**, ADMINISTRATION, PERMITS AND INSPECTION, BY THE AMENDMENT OF **SECTION 4.04**, PLANS AND SPECIFICATIONS, **AT (A)**, RELATIVE TO EXCEPTIONS FOR SUBMISSION OF PLANS; BY THE AMENDMENT OF **SECTION 4.05**, BUILDING PERMITS ISSUED, RELATIVE TO ACCEPTANCE OF PLANS AND SPECIFICATIONS; BY THE AMENDMENT OF **SECTION 4.15**, CERTIFICATE OF OCCUPANCY, RELATIVE TO ISSUANCE OF CERTIFICATES; AND THROUGH THE AMENDMENT OF **ARTICLE VII**, SIGNS, BY THE AMENDMENT OF **SECTION 7.05**, UNLAWFUL SIGNS, RELATIVE TO AUTHORITY TO REMOVE SIGNS; BY THE AMENDMENT OF **SECTION 7.09**, PRESUMPTION, RELATIVE TO PRIMA FACIE EVIDENCE FOR VIOLATIONS; AND THROUGH THE AMENDMENT OF **ARTICLE IX**, FENCES, BY THE AMENDMENT OF **SECTION 9.02**, ENCLOSURE OF SWIMMING POOLS, SPAS AND HOT TUBS, RELATIVE TO REQUIREMENTS AND OFFENSES; AND BY THE ADDITION OF **ARTICLE XVIII**, ACCESSIBILITY, RELATIVE TO REQUIREMENTS OF BUILDINGS AND FACILITIES FOR ACCESSIBILITY TO THE PHYSICALLY CHALLENGED; PROVIDING FOR A FINE OF UP TO **$2,000** FOR EACH OFFENSE IN VIOLATION OF THE ORDINANCE; PROVIDING THIS ORDINANCE BE CUMULATIVE; PROVIDING FOR SEVERABILITY; PROVIDING FOR GOVERNMENTAL IMMUNITY; PROVIDING FOR INJUNCTIONS; PROVIDING FOR PUBLICATION AND BECOMING EFFECTIVE TEN DAYS AFTER FIRST PUBLICATION

BE IT ORDAINED BY THE CITY COUNCIL OF THE CITY OF ARLINGTON, TEXAS:

1.

That the "Construction" Chapter of the Code of the City of Arlington, Texas, 1987, is hereby amended through the repeal of the existing Article I and the adoption of a new Article I, entitled Building Code, so that hereafter, said Article shall be and read as follows:

ARTICLE I

BUILDING CODE

Section 1.01 Title

This Chapter shall be known as the "Building Code" of the City of Arlington.

Section 1.02 Adoption of Code

The Uniform Building Code, 1991 Edition (hereinafter called "U.B.C."), as published by the International Conference of Building Officials, is hereby adopted and designated, together with the deletions, amendments and addenda hereinafter contained, as the Building Code of the City of Arlington, the same as though said U.B.C. were copied at length herein. Copies of the U.B.C. and its Appendices shall be kept on file in the Office of the City Secretary.

Section 1.03 Code Defined; Rule of Construction

This Building Code shall include all of the provisions of the U.B.C. as adopted by Section 1.02 above and all other provisions contained herein. In the event a conflict is determined to exist between said U.B.C. as adopted and the other provisions of this Chapter, the latter provisions shall be construed as controlling and taking precedence over the former.

Section 1.04 Amendments, Additions and Deletions

The adoption of the U.B.C., as provided in Section 1.02 above, is modified and amended by the following:

A. The addition thereto of Articles II, et seq., of this Chapter.

B. The deletion in the entirety of the following provisions of the U.B.C.:

(1) Section 203, entitled Unsafe Buildings or Structures;
(2) Section 204, entitled Board of Appeals;
(3) Section 205, entitled Violations; and
(4) Chapter 3, entitled Permits and Inspections; and
(5) Chapter 31, entitled Accessibility; and
(6) Section 3210, entitled Inspections.

C. The amendment of the following U.B.C. provisions:

(1) The amendment of Section 103, entitled Scope, by the addition of the following "EXCEPTION" between the first paragraph and the second paragraph:

EXCEPTION: Storage buildings not exceeding three hundred (300) square feet in area or two thousand (2,000) cubic feet in volume shall not be subject to the provisions of this Building Code provided:

(a) The building shall not be intended or used for human occupancy;

(b) Any mechanical, electrical or plumbing work shall be installed in full compliance with the appropriate Chapter of the Code of the City of Arlington for such work;

(c) The building shall be anchored at each corner: said anchorage shall equal or exceed a concrete pier ten inches (10") in diameter and eighteen inches (18") in depth embedded with a standard one-half inch (½") diameter anchor bolt;

(d) The building shall be not closer than five feet (5′) to a property line in residential areas and ten feet (10′) to a property line in non-residential areas: subject, however, to any more restrictive setbacks contained in

the "Zoning" Chapter of the Code of the City of Arlington: further, storage buildings on commercial property shall be separated from other structures and property lines as specified by U.B.C., Chapter 5;

(e) The building shall be maintained in good repair;

(f) There shall be not more than one (1) such building on any property occupied for other than residential use; and

(g) A permit for such building shall have been obtained from the Building Official.

(2) The amendment of Section 202, entitled Powers and Duties of Building Official, Subsection (c), Right of Entry, to read as follows:

Whenever necessary to make an inspection to enforce any of the provisions of this Building Code, or whenever the Building Official or his authorized representative has reasonable cause to believe that there exists in any building or upon any premises any condition or violation which makes such building or premises unsafe, dangerous or hazardous, the Building Official or his authorized representative may enter such building or premises at all reasonable times to inspect the same or to perform any duty imposed upon said Building Official by this Building Code. If such building or premises be occupied, he shall first present proper credentials and request entry. If such building or premises be unoccupied, he shall first make a reasonable effort to locate the owner or other person having charge or control of the building or premises and request entry. If such entry is refused, or, if no owner or other person having charge or control of the building or premises can be located, the Building Official or his authorized representative shall have recourse to every remedy provided by law to secure entry.

(3) The amendment of Section 202, entitled Powers and Duties of Building Official, Subsection (e), Occu-

pancy Violations and Dangerous Buildings: Evacuation, to read as follows:

Whenever any building, structure, or equipment therein which is regulated by this Building Code is being used contrary to the provisions of said Code, the Building Official or his authorized representative may order that such use be discontinued and/or that the building or structure, or a portion thereof, be vacated by written notice served on any person who is causing such use to be continued. Further, the Building Official or his authorized representative may order the evacuation of any building or premises, or a portion thereof, which constitutes a dangerous building as defined in Article XVII of this Chapter.

Notice to stop use shall be given by personal delivery or by certified mail, return receipt requested, to the person responsible for the continued use. Such person shall discontinue the use within the time prescribed by the Building Official after receipt of such notice and shall not resume the use of the building or premises until first rendering the same in compliance with this Building Code.

Notice to vacate a dangerous building or premises shall be posted at or upon each exit of the said structure affected thereby, and shall be in substantially the following form:

"DO NOT ENTER
UNSAFE TO OCCUPY

It is a misdemeanor to occupy this building, or to remove or deface this notice.

Arlington Building Official
(by)_____
(date)_____
(compliance due date)_____"

No person shall remain in or enter any building or premises which has been so posted, except that en-

try may be made to repair, demolish or remove the unsafe condition. Such entry or the destruction, defacing or removal of said notice prior to approval by the Building Official or his authorized representative shall be a violation of this Building Code.

(4) The amendment of the definition of "DWELLING UNIT" contained in Section 405 by the addition of the following sentence:

A Dwelling Unit shall not contain more than one (1) kitchen.

(5) The amendment of the definition of "SHALL" contained in Section 420, so that said definition shall read as follows:

SHALL, as it applies to an act or duty to be performed by the Building Official pursuant to any section of this Building Code, is discretionary. Its use in all other applications in this Code shall be mandatory.

(6) The amendment of Section 503, entitled Mixed Occupancy, Subsection (d), Fire Ratings for Occupancy Separations, so that "EXCEPTIONS", paragraph 3 shall read as follows:

Occupancy separation between a dwelling (including its attic area) and its private garage may be accomplished by a one-half inch (½") thickness of standard gypsum board, with treated joints, applied at the garage side. A door opening shall have a tight-fitting door. Fire dampers need not be installed in air duct openings located in such walls or ceiling.

(7) The amendment of Section 705, entitled Light, Ventilation and Sanitation, Subsection (c) Sanitation, to read as follows:

Every building or portion thereof where persons are employed shall be provided with sanitary facilities which comply with the "Plumbing" Chapter of the Code of the City of Arlington. Build-

ings or portions thereof where persons are employed shall be provided with at least one (1) water closet. Separate facilities shall be provided for each sex when the number of employees exceeds ten (10). Such toilet facilities shall be located either in such building or conveniently in a building adjacent thereto on the same property.

Such water closet rooms in connection with food establishments where food is prepared, stored or served shall have a nonabsorbent interior finish as specified in Section 510(b), shall have handwashing facilities therein or adjacent thereto, and shall be separated from food preparation or storage rooms as specified in Section 510(a).

For other requirements on water closets, see Section 511.

(8) The amendment of Section 1205, entitled Light, Ventilation and Sanitation, Subsection (c), Ventilation, to delete all specific mentions of "laundry rooms."

(9) The amendment of Section 1210, entitled Smoke Detectors and Sprinkler Systems, Subsection (a) Smoke Detectors, paragraph 2, Additions, Alterations, or Repairs to Group R Occupancies, and Paragraph 3, Power Source, to read as follows:

2. Smoke detectors in existing Group R Occupancies, except Division 1 apartment houses and hotels, shall be installed in accordance with paragraphs 3, 4 and 5 of this subsection, either when the interior of the dwelling unit is repaired, remodeled or rebuilt at a projected cost of more than $1,000.00, and such work requires a permit, or when a sleeping room is added or created, smoke detectors in existing Group R, Division 1 apartment houses and hotels shall be installed in compliance with the "Fire Prevention" Chapter.

3. Smoke detectors shall receive their primary power from the building wiring when such wiring is served from a commercial source,

and shall be equipped with a battery backup. The detector shall emit a signal when the batteries are low. Wiring shall be permanent and without a disconnecting switch other than those required for over current protection. Smoke detectors may be solely battery operated when installed in buildings without commercial power.

(10) The amendment of Section 2308, entitled Special Design, Subsection (b), Retaining Walls, by the addition of the following paragraph and "EXCEPTION":

Retaining walls exceeding three feet (3′) in height shall be constructed of reinforced concrete and designed by a professional engineer unless another arrangement is specifically approved by the Building Official or his authorized representative. A wall built in tiers shall be considered a single wall in height when the upper tier is set back less than one and one-half (1½) times the height of the wall section below.

EXCEPTION: Retaining walls erected on properties used for Group R-1 apartment houses or Group R-3 occupancies may be constructed up to six feet (6′) in height of materials other than reinforced concrete which are approved by the Building Official or his authorized representative. These retaining walls shall be designed by a professional engineer when exceeding a height of four feet (4′). Unless specifically approved by the Building Official, such walls shall not support a building, driveway or other permanent construction closer to the wall than one and one-half (1½) times the full height of the wall.

(11) The amendment of Section 2516, entitled General Construction Requirements, Subsection (g), Exterior Wall Coverings, Paragraph 4, Shingles or Shakes, by the addition of the following "EXCEPTION":

EXCEPTION: Wood shingles and shakes shall not be used as an exterior wall covering within seven feet (7′) of grade for Group R-1 Occupancies.

All wood shingles or shakes to be used as an exterior wall covering for Group R-1 Occupancies shall be fire-retardant shakes and shingles. Fire retardant shakes and shingles are wood shakes and shingles complying with U.B.C. Standard No. 32-8 or 32-11 impregnated by the full-cell vacuum-pressure process with fire retardant chemicals, and have been qualified by U.B.C. Standard No. 32-7 for use on Class A, B or C roofs. Each bundle of treated wood shakes and shingles shall bear labels identifying their roof covering classification and approved quality control agency.

(12) The amendment of Section 2603, entitled Specifications for Tests and Materials [Chapter 3], Subsection (b), Tests of Materials, paragraph 5, Admixtures, [3.6], subparagraph A, to read as follows:

Admixtures to be used in concrete shall be subject to prior approval by the Building Official. Calcium chloride shall not be used in residential foundation concrete, except in a design approved by the Building Official or his authorized representative and which is submitted by a registered architect or engineer.

An admixture shall be shown capable of maintaining essentially the same composition and performance throughout the work as the product used in establishing concrete proportions in accordance with Section 2604(c).

Calcium chloride or admixtures containing chloride from other than impurities from admixture ingredients shall not be used in prestressed concrete, in concrete containing embedded aluminum, or in concrete cast against stay-in-place galvanized metal forms. Section 2604(f).

(13) The amendment of Section 2605, entitled Mixing and Placing Concrete [Chapter 5], Subsection (h),

Preparation of Equipment and Place of Deposit, by the addition of Paragraph 8 to read as follows:

For concrete floor slabs supported directly on the ground in Group R Occupancies, a vapor barrier approved by the Building Official or his authorized representative shall be installed beneath the slab.

(14) The amendment of Section 2903, entitled Excavations and Fills, Subsection (a), General, by the addition of the following five (5) paragraphs and one (1) "EXCEPTION" between the first and second paragraphs:

Should trench excavations exceed five feet (5') in depth, bid documents and construction contracts must include provisions for specifications for adequate safety systems that meet Occupational Safety and Health Administration (OSHA) standards. Further, these plans and specifications shall include a pay item for these safety systems, which is to be a part of the contract. In addition, a safety program outline shall be provided to the property owner by the contractor and the contractor's safety record shall be reviewed as a condition of the contract award.

Prior to performing such excavations, the contractor must submit plans and specifications for trench shoring to the Building Official for review. The plans shall be stamped, signed and dated by a registered professional engineer attesting that these plans meet OSHA requirements in accordance with state law.

The contract requirements of this Section shall not apply to contracts entered into with persons subject to the safety standards adopted under V.A.C.S., Article 6053-1, entitled Transportation of Gas and Gas Pipeline Facilities.

Acceptable fill shall only be comprised of one (1) or more of the following materials: Dirt, concrete or asphalt. No person shall cause, allow, suffer or permit fill containing any other mate-

rial to be used for any building, structure, foundation or retaining structure.

No person shall cause, allow, suffer or permit fill to be placed or stored, upon any undeveloped lot not currently experiencing ongoing construction, in such a manner that said fill is not spread uniformly so that no area of fill differs in height by more than twenty-four inches (24") from any other area of fill on said lot. Provided, however, that upon written notice by the Building Official or his designated representative, the record property owner of any such lot shall be allowed forty-five (45) days to remove or spread said fill in order to comply with this provision. Notice shall be deemed sufficient for this purpose if mailed, by certified mail, return receipt requested, to the last-known address of the record property owner, or if personally delivered to said owner.

EXCEPTION: This provision shall not apply to fill located upon the premises of a business which provides said fill to others for compensation. A valid certificate of occupancy for such business shall be sufficient to establish the applicability of this exception.

(15) The amendment of Table 32-A, entitled "Minimum Roof Classes," to read as follows:

TABLE NO. 32-A MINIMUM ROOF CLASSES[2]
Types of Construction

	I	II			III		IV	V	
OCCUPANCY	F.R.	F.R.	1-HR	N	1-HR	N	H.T.	1-HR	N
A-1	B	B	-	-	-	-	-	-	-
A)2-2.1	B	B	B	-	B	-	B	B	-
A-3	B	B	B	B	B	B	B	B	B
A-4	B	B	B	B	B	B	B	B	B

B)1-2	B	B	B	B	B	B	B	B	B
B)3-4	B	B	B	B	B	B	B	B	B
E	B	B	B	B	B	B	B	B	B
H-1	A	A	A	A	B	B	B	B	B
H)2-3-4-5-6-7	A	B	B	B	B	B	B	B	B
I)1.1-1.2-2	A	B	B	-	B	-	B	B	-
I-3	A	B	B[1]	-	B[1]	-	-	B	-
M	B	B	B	B	C	C	C	C	C
R-1	B	B	B	B	C	C	C	C	C
R-3	B	B	B	B	C	C	C	C	C

[1]See U.B.C., Section 1002(b)

[2]Existing roof coverings shall not be required to conform with this table. Any new shingles installed, including replacements shall conform to the table. Exception: When replacement of shingles are less than 10% of the roof area per calendar year, new shingles may be of the same type as the existing roof.

A-Class A Roof Covering
B-Class B Roof Covering
C-Class C Roof Covering
N-No requirements for fire resistance
F.R.-Fire Resistive
H.T.-Heavy Timber

(16) The amendment of Section 3305, entitled <u>Corridors and Exterior Exit Balconies</u>, Subsection (g), <u>Construction</u>, so that "EXCEPTIONS", paragraph 5, shall read as follows:

Group B-2 Office Occupancies when:

(a) exits are available from an open floor area;

EXCEPTION: Attic areas and concealed intermediate under floor spaces may be unprotected when approved fire lane access, fire hydrants, fireflow, and an approved fire alarm system is provided.

Fire hose threads used in connection with fire-extinguishing systems shall be National Standard hose threads or alternatives approved by the Chief of the Fire Department of the City of Arlington.

In buildings used for high-piled combustible storage, fire protection shall be in compliance with the applicable provisions of the "Fire Code" Chapter of the Code of the City of Arlington.

(20) The amendment of Section 3802, entitled Automatic Fire-extinguishing Systems, Subsection (b), All Occupancies Except Group R, Division 3 and Group M, Paragraph 1, Parts 1 and 2, to also except Group B, Divisions 2 and 4 storage warehouses from automatic sprinkler system requirements.

(21) The amendment of Section 3802, entitled Automatic Fire-extinguishing Systems, Subsection (b), All Occupancies Except Group R, Division 3 and Group M, by the addition of Paragraph 5, to read as follows:

All buildings three (3) or more stories in height shall have an automatic sprinkler system except Group B-3 open parking garages, of freestanding Type I construction and Group R-3 single family dwelling occupancies.

(22) The amendment of Section 3802, entitled Automatic Fire Extinguishing Systems, subsection (c), Group A Occupancies, Paragraph 6, Amusement Buildings, to read as follows:

An automatic sprinkler system shall be installed in all amusement buildings. The main water-flow switch shall be electrically supervised. The sprinkler main cutoff valve shall be supervised.

EXCEPTION: An automatic sprinkler system need not be provided for amusement buildings actually operating thirty (30) days or less.

(23) The amendment of Section 3802, entitled Automatic Fire-extinguishing Systems, Subsection (h), Group R, Division 1 Occupancies, by the addition of the following paragraph:

For the purpose of establishing automatic sprinkler requirements in this section, area separation walls as described in U.B.C., Section 505(f) shall not constitute separate buildings.

(24) The amendment of Section 3806, entitled Buildings Under Construction, Subsection (b), Where Required, first paragraph, to read as follows:

Buildings four (4) stories or more in height shall be provided with not less than one standpipe for use during construction. Such standpipes shall be installed when the progress of construction is not more than 40 feet in height above grade. Such standpipes shall be provided with fire department hose connections at accessible locations adjacent to usable stairs, and the standpipe outlets shall be located adjacent to such usable stairs. Such standpipe systems shall be extended as construction progresses to within one floor of the highest point of construction having secured decking or flooring.

(25) The amendment of Table 38-A, entitled Standpipe Requirements, Occupancy, paragraph 5, to read as follows:

Groups I, H, B, Divisions 1, 2 (except storage warehouses) or 3 Occupancies less than four (4) stories in height but greater than twenty thousand (20,000) square feet per floor.

(26) The amendment of Section 4205, entitled Textile Wall Coverings, to read as follows:

When used as interior wall finish, textile wall coverings, including materials such as those hav-

ing a napped, tufted, looped, nonwoven, woven or similar surface, shall have a Class I flame spread.

(27) The amendment of Section 5103, entitled Special Provisions, Subsection (e), Stretcher Requirements, to read as follows:

In all structures where elevators are installed, at least one (1) elevator shall be provided with a minimum clear distance between walls, or between walls and door excluding return panels, not less than eighty inches (80") by fifty-four inches (54"), and a minimum distance from wall to return panel not less than fifty-one inches (51") with a forty-two inch (42") side slide door, unless otherwise designed to accommodate an ambulance-type stretcher seventy-six inches (76") by twenty-four inches (24") in the horizontal position.

In buildings where one (1) elevator does not serve all floors, two (2) or more elevators may be used as long as each floor is served by at least one (1) elevator meeting the above requirements to accommodate a stretcher. The elevators shall be identified as to which floors they serve.

(28) The amendment of Section 5406, entitled Safety Glazing, Subsection (d), Hazardous Locations, so that "EXCEPTION", Paragraph E, shall read as follows:

Assemblies of leaded, faceted or carved glass, in items 1, 2, 6 and 7 when used for decorative purposes or item 5 when not equipped with a showerhead.

(29) The amendment of Appendix Chapter 12, Division III, Section 1241, entitled General, to read as follows:

The provisions of this section apply to the design and construction of barriers for all swimming pools.

(30) The amendment to Appendix Chapter 12, Division III, Section 1243, entitled Requirements, Subsection (a), Outdoor Swimming Pool, Paragraph 9, to read as follows:

Where a wall of a structure serves as part of the barrier, doors with direct access to the pool through that wall shall be equipped with an alarm which produces an audible warning when the door and its screen, if present, are opened. The alarm shall sound continuously for a minimum of 30 seconds immediately after the door is opened, and be capable of being heard throughout the structure during normal activities. The alarm shall automatically reset under all conditions. The alarm system shall be equipped with a manual means, such as a touchpad or switch, to temporarily deactivate the alarm for a single opening. Such deactivation shall last for no more than 15 seconds. The deactivation switch shall be located at least 54 inches above the threshold of the door. Other means of protection, such as self-closing doors with self-latching devices approved by the building official, shall be acceptable so long as the degree of protection afforded is not less than the protection afforded by the alarm system described above.

EXCEPTION: Doors or gates which provide the only access into a nonhabitable storage equipment room or building.

Section 1.05 Adoption of Appendices

The following referenced provisions of the U.B.C. annexed hereto as appendices, the same being either attached hereto or incorporated herein by reference, are made a part of this Building Code.

Appendix A. The entire provisions, except 1991 Chapters 31 and 38, of the Uniform Building Code Standards, 1991 Edition, as promulgated by the International Conference of Building Officials.

Appendix B. Only Chapter 7, entitled Aviation Control Towers, Chapter 10, entitled Detention and Correctional

Facilities, Chapter 11, entitled Agricultural Buildings, Chapter 12, Division III, entitled Barriers for Swimming Pools, Spas and Hot Tubs, Chapter 32, entitled Reroofing, Chapter 49, entitled Patio Covers, and Chapter 55, entitled Membrane Structures, of the Appendix to the Uniform Building Code, 1991 Edition. All other Chapters of said Appendix to the U.B.C. are hereby omitted from this Building Code.

Appendix C. The form of the surety bonds required by the provisions of this Building Code.

Section 1.06 Construction Prohibited in Easements

A. Regardless of materials, manner of construction or unique characteristics of land, it shall be unlawful for any person, firm or corporation to cause or permit the installation, revision or relocation of any construction improvement where any part of such improvement is to be located in a public easement. The foregoing prohibition shall not apply to proposed improvements consisting of paving, flatwork, wooden or chain link fences or retaining walls less than three feet (3') in height which do not support a structure, provided that the proposed improvements have been approved in writing by the Building Official with the concurrence of the City Engineer and the Director of Water Utilities prior to their construction.

B. In cases where improvements other than those listed in Subsection (A) above are proposed in City easements, application shall be made to the Building Official for the execution of an Easement Joint-Use Agreement. If, in the determination of the Building Official after conferring with the other appropriate departments of the City of Arlington, such Joint-Use Agreement cannot be executed, the Building Official will refer the request to the Building Code Board of Appeals for final determination.

C. The term "improvement" includes, but is not limited to, concrete or asphalt paving, swimming pools, fences, retaining walls, temporary or permanent buildings, earth fill or excavation and landscaping. "Improvements" shall not include public or private mailboxes, or poles and boxes necessary for public utility services.

The term "easement" shall include easements for streets, drainage and utilities.

Section 1.07 **<u>Requirements for Drainage</u>**

A. No person, firm or corporation within the corporate limits of the City of Arlington, Tarrant County, Texas, shall do, cause or permit to be done, the installation, modification or relocation of any construction improvement where the improvement, when completed, will significantly increase the speed or volume of water flowing across or standing on other property which is either upstream or downstream from the property on which the improvement is to be made so as to cause damage to such other property, nor shall the Building Official be required to issue a building permit where engineering data from a qualified professional engineer reveals that such improvement would worsen any existing drainage or flooding problem or would cause any damage to such other property.

B. The term "improvement" means any of those things which require a building permit, such as buildings (either permanent or temporary), land development, concrete or asphalt paving, swimming pools, fences, retaining walls, earth fill or excavation and landscaping. "Improvement" shall not include poles or boxes necessary for public utility service.

C. Prior to obtaining a building permit, and to ensure that there will be no surface drainage problems after the construction of the proposed improvement, an acceptable drainage plan will be filed with the Building Inspections Department of the City of Arlington which accurately shows all run-off water which comes onto the property being so improved, the method of conveying the water across the property, and the method and place of discharge for the run-off water leaving the property. Such plans shall show the capacity of the adjacent property, public way, easement or drainage facility, as the case may be, to receive such amounts of water. No surface drainage plan is required to be filed with said City for improvements on lots containing or to contain group R-3 occupancies, provided the drainage for such improvement is made to comply with H.U.D. (F.H.A.) Re-

quirements for surface drainage as contained in the current H.U.D. Data Sheet 72 or H.U.D. Data Sheet 73 as the same may, from time to time, be amended. Such requirements and future amendments are incorporated in this Building Code and made a part hereof for all purposes: provided, however, that the Building Official may require the submission of a surface drainage plan for such exempt properties when, in his opinion, such plan is necessary to prevent a drainage problem. If the builder wants the drainage for any improvement on such exempt properties to deviate from H.U.D. (F.H.A.) requirements, then he shall submit an acceptable drainage plan meeting the requirements contained in this Section.

D. All construction of improvements shall be done to comply with an approved drainage plan as provided for in this Section or H.U.D. (F.H.A.) Requirements, as applicable.

Section 1.08 <u>Enforcement, Violations and Penalties</u>

A. It shall be unlawful for any person, firm or corporation to erect, construct, enlarge, alter, repair, move, improve, remove, convert, demolish, equip, use, occupy or maintain any building, structure or premises in the City of Arlington, or cause or permit the same to be done, contrary to or in violation of any of the provisions of this Building Code.

B. Any person, firm or corporation violating any of the provisions of this Building Code shall be deemed guilty of a misdemeanor and each day the violation continues shall be a separate offense. Each offense shall be punishable by a fine of not more than Two Thousand Dollars and No Cents ($2,000.00).

C. In addition to the power of the Building Official under U.B.C., Section 202(c), entitled "Right of Entry," to inspect a building pursuant to this Building Code, any peace officer may enter the public areas of any building or premises, or any areas specified in a proper inspection warrant, at all reasonable times wherever necessary in the performance of his duties to inspect and investigate for violations of any law, or to enforce any law, including violations of this Building

Code. He shall first present proper credentials and request entry, unless otherwise permitted by law. If such entry is refused or, if no owner or other person having charge or control of the building or premises can be located, he shall have recourse to every remedy provided by law to secure entry.

D. No owner, occupant or any other person having charge, care or control of any building or premises shall fail or neglect, after proper request is made pursuant to Subsection (C) above, to promptly permit entry therein by a peace officer in the performance of his duty. Any person violating this Subsection shall be guilty of a misdemeanor.

Section 1.09 <u>Skateboard Ramps</u>

A. As used in this Section, the phrase "skateboard ramp" shall refer to a structure or piece of work artificially built up or composed of parts joined together in some definite manner, regardless of the materials used or the manner of construction, which is primarily used for, or designed and intended for primary use as, a ramp for skating or skateboarding activities.

B. It shall be unlawful for any person to erect, construct, keep, maintain or use a skateboard ramp that is located:

(1) at a distance closer than one hundred fifty feet (150′) from any building located on another's property that is used or intended to be used for habitation, regardless of whether the habitation existed prior to the erection of said skateboard ramp; or

(2) at a distance closer than fifty feet (50′) from the property line of the lot where said skateboard ramp is located.

C. Should a habitation be placed on another's property closer than one hundred fifty feet (150′) to an existing skateboard ramp, the owner of said skateboard ramp shall remove or relocate, or cause to be removed or relocated, said skateboard ramp within ninety (90) days of the completion of construction of the habitation.

D. Failure to remove or relocate, or cause to be removed or relocated, a skateboard ramp as required by this Section shall constitute a misdemeanor. Each day that a skateboard ramp remains in violation of this Section shall constitute a separate offense.

Section 1.10 **Presumption**

Unless otherwise specified in this Chapter, the owner, occupant or person in control of any building or premises where any violation of this Building Code is found shall be prima facie responsible for such violation.

Further, Article IV is hereby amended by the amendment of **Section 4.04, Plans and Specifications**, Subsection **(A)**, so that hereafter Subsection 4.04(A) shall be and read as follows:

A. With each application for a building permit and when required by the Building Official for enforcement of any provisions of this Building Code, two (2) or more sets of plans and specifications shall be submitted. The Building Official may require plans and specifications to be prepared and designed by an engineer or architect licensed by the State of Texas to practice as such, with his professional seal affixed to the documents.

EXCEPTION: Except when specifically required by the Building Official, plans and specifications need not be submitted for the following:

(1) One (1) story buildings of Type V conventional wood frame construction, with an area not exceeding six hundred (600) square feet;

(2) Groups M and R-3 Occupancies of Type V conventional wood frame construction; or

(3) The Building Official may waive the submission of plans, calculations, construction, inspection requirements and other data if it is found that the nature of the work applied for is such that reviewing of plans is not necessary to obtain compliance with the Code.

Further, Article IV is hereby amended by the amendment of **Section 4.05, <u>Building Permits Issued</u>**, so that hereafter said Section shall be and read as follows:

Section 4.05 <u>Building Permits Issued</u>

A. The application, plans and specifications filed by an applicant for a permit shall be reviewed by the Building Official. Such plans may also be reviewed by other departments of the City of Arlington to check compliance with the laws and ordinances under their jurisdiction, including but not limited to review by the Transportation Department of the City of Arlington to ensure compliance with the Traffic Study Provisions adopted by resolution of the City Council of said City. If the Building Official finds that the work described in an application for permit and the plans filed therewith conform to the requirements of this Building Code and other pertinent laws and that the permit fee has been paid, he shall issue the permit; however, except by specific approval by the Building Official or his authorized representative, a permit shall not be issued in a development where the construction of streets, drainage, water, sewer and other such facilities have not been completed and accepted by the City of Arlington.

B. Accepted plans and specifications shall not be changed, modified or altered without authorization from the Building Official, and all work shall be done in accordance with the plans. One (1) set of plans, specifications and computations shall be retained by the Building Official for a period of not less than ninety (90) days from the date of completion of the work covered therein.

C. The Building Official may issue a permit for the construction of part of a building or structure before the entire plans and specifications for the whole building or structure have been submitted or approved, provided adequate information and detailed statements have been filed complying with all pertinent requirements of this Building Code. The holder of such permit shall proceed at his own risk without assurance that the permit for the entire building or structure will be granted.

Further, Article IV is hereby amended by the amendment of **Section 4.15, Certificate of Occupancy**, so that hereafter said section shall be and read as follows:

Section 4.15 Certificate of Occupancy

A. Use of Occupancy. No premises, building or structure in Group R-1, A, B, E, H or I shall be used or occupied until a Certificate of Occupancy has been issued as provided herein. A change in ownership or name change shall require the issuance of a new Certificate of Occupancy.

B. Change in Use. Changes in the character of occupancy or use of a building shall not be made, except as specified in U.B.C., Section 502.

C. Certificate Issued. The Building Official shall issue a Certificate of Occupancy upon a finding that the premises complies with the Building Code and provisions of the "Zoning" Chapter of the Code of the City of Arlington. For new structures or when the occupant is of a different character of occupancy or use from the previous certificate holder, an inspection shall be made by the Building Inspections Division. Where no change in character of occupancy is proposed for a structure previously granted a Certificate of Occupancy, no inspection is necessary unless specifically required by the Building Official. In the event that a tenant space is being altered, enlarged or reduced in size, or if the Building Official believes that the previous tenant altered the space without benefit of permits, an inspection may be required prior to the occupancy. Other City departments may require inspections prior to the granting of a Certificate of Occupancy.

The Certificate of Occupancy shall contain:

1. The address of the building;

2. The name, address and telephone number of the occupant of said premises, building or structure;

3. The allowable use for which the certificate is issued;

4. The zoning district in which the use is located; and

5. Any conditions of the granting of the certificate.

D. Temporary Certificate. A temporary Certificate of Occupancy may be issued by the Building Official for the use of a portion or portions of a building or structure prior to the completion of the entire building or structure.

E. Posting. The Certificate of Occupancy shall be posted in a conspicuous place on the premises and shall not be removed by the Building Official.

Further, Article VII is hereby amended by the amendment of **Section 7.05, Unlawful Signs**, so that hereafter said section shall be and read as follows:

Section 7.05 Unlawful Signs

A. A sign which is installed, erected or constructed in violation of any Chapter of the Code of the City of Arlington is hereby declared to be a nuisance.

B. The Building Official may abate an unlawful sign in accordance with the procedures set forth in Sections 4.03 and 4.04 of the "Nuisances" Chapter.

C. The Building Official may remove and dispose of any sign which is in violation of Subsections 7.06(E) or (F), without prior notice to the owner of such sign.

Further, Article VII is hereby amended by the amendment of **Section 7.09, Presumption**, so that hereafter said section shall be and read as follows:

Section 7.09 Presumption

A. If any sign of any nature is erected, constructed or maintained in violation of Section 7.06 (E) or (F), including but not limited to garage sales, neighborhood sales, moving services, baby-sitting services, house-

keeping services, lawn care services or any other type of service or sales:

1. When the name of any person appears on such a sign, it shall be prima facie evidence that the person so named is responsible for the offense of erecting, constructing or maintaining said sign, and that person shall be guilty of a misdemeanor;

2. When any address appears on such sign, it shall be prima facie evidence that the record property owner at the address so specified is responsible for the offense of erecting, constructing or maintaining said sign, and that person shall be guilty of a misdemeanor; and

3. In the event that such a sign contains no identifying information other than a telephone number, such information shall be prima facie evidence that the record property owner at the address so specified is responsible for the offense of erecting, constructing or maintaining said sign, and that person shall be guilty of a misdemeanor.

B. Proof establishing a prima facie case based on name, address or telephone number may be made as follows:

1. Name - An authenticated photograph of the sign showing the name of the person allegedly responsible, or the sign itself.

2. Address - A certified copy of that section of the most recent tax roll which shows the name and address of the record property owner and an authenticated photograph of the sign or the sign itself.

3. Telephone Number - An authenticated photograph of the sign or the sign itself, showing the telephone number, and a copy of the most recent telephone directory showing the listing, or a letter or other document from the telephone company showing the listed person and address at that telephone number.

Further, Article IX is hereby amended by the amendment of **Section 9.02**, **Enclosure of Swimming Pools, Spas and Hot Tubs**, so that hereafter said section shall read as follows:

Section 9.02 **Enclosure of Swimming Pools, Spas and Hot Tubs**

A. Construction Requirements For Existing Swimming Pools

1. Every outdoor swimming pool, spa and hot tub shall be completely enclosed by a fence or wall not less than four feet (4′) in height.

2. Every fence or wall required by this Section shall be constructed so that it contains no openings, holes or gaps, except doors or gates, which will allow the passage of a sphere four inches (4") in diameter.

3. Every door or gate that forms a part of a fence or wall required by this Section shall be constructed so that it contains no openings, holes or gaps which will allow the passage of a sphere four inches (4") in diameter.

4. A building may be used as part of a fence or wall required by this Section. No **door** of such building shall open directly into the enclosed area except as herein provided.

5. It is an exception to Subsection (A)(4) that the door:

   a. Provides the only access into a nonhabitable storage or equipment room or building; or

   b. Is to a single-family dwelling and is in compliance with Subsection (B).

B. Self-closing and Self-latching Devices on Existing Swimming Pools

1. All gates or doors opening into the enclosed area shall be equipped with a self-closing and self-latching device for keeping the gate or door securely closed at all times when not in actual use.

2. The application of this subsection shall not include sliding glass doors.

3. It is an exception to this subsection that the door or gate provides the only access into a non-habitable storage or equipment room or building.

C. Application of Requirements

1. The requirements of Subsections (A) or (B) shall be applicable to all outdoor swimming pools, spas and hot tubs constructed or installed prior to the adoption of the 1991 U.B.C. in Article I of this Chapter and which have a depth capacity of twenty-four inches (24") or more of fluid at any point, whether actually containing a fluid or empty.

2. Outdoor swimming pools, spas and hot tubs, whose construction or installation was completed prior to May 1, 1990, and which are located at occupancies other than hotels, motels, lodges and apartment houses, shall not be subject to the provisions of this ordinance requiring doors to a building that forms part of an enclosure to be equipped with self-closing and self-latching devices.

D. Modifications

The Building Code Board of Adjustments and Appeals may make modifications in individual cases, upon a showing of good cause, with respect to the height, nature of location of the fence, wall, gates or latches, or the necessity therefor, provided the protection as sought hereunder or by Appendix B, Chapter 12, Division III, is not reduced thereby. Said Board may permit other protection devices or structures to be used so long as the degree of protection afforded by the substitute devices or structures is not less than the protection afforded by the substitute fence, gates and latch described herein, or in Appendix D, Chapter 12, Division III, as applicable.

E. Definition

The terms "swimming pool", "spa" and "hot tub" as used herein, shall mean an artificial or semi-artificial receptacle or container designed to contain fluid, whether actually containing a fluid or not, which is either temporarily or permanently located outdoors, and is used or intended to be used for public, semi-public or private human use involving submersion of all or part of the body, whether or not a fee is paid for such use. Such use may include, but is not limited to, swimming, wading, soaking, floating or recreational bathing by any number of persons. These terms do not apply to a receptacle or container that is located outdoors and is not used or intended to be used for public, semi-public or private human use involving submersion of all or part of the body, such as fountains and reflections pools.

F. Offense

1. A person commits an offense if he owns, occupies, maintains or is in charge of premises that are in violation of this Section.

2. There shall be no requirement of a culpable mental state for a violation of this Section or Appendix B, Chapter 12, Division III.

Further, the "Construction" Chapter of the Code of the City of Arlington, 1987, is hereby amended by the addition of **Article XVIII**, **Accessibility**, so that hereafter said Article shall be and read as follows:

ARTICLE XVIII

ACCESSIBILITY

Section 18.01 Purpose

This Article is intended to make buildings and facilities accessible to and usable by people who are mobility impaired, including but not limited to persons with walking difficulties, visual impairment, hearing impairment, incoordination, reaching disabilities and extremes of physical

size. It is intended to make buildings and facilities covered by the "Construction" Chapter accessible to and functional for the physically challenged to, through and within their doors, without loss of function, space or facilities where the general public is concerned.

Section 18.02 Application to Existing Buildings

Building in existence at the time of the adoption of this Article are not required to meet these requirements at this time. However, other Code provisions regulating significant alterations, repairs, additions or changes in the occupancy group may require improvements as specified in those sections.

Facilities required to be accessible by previous codes shall be maintained no less accessible than the accessibility requirements in place at the time the facility was permitted.

Section 18.03 Scope

The following facilities are required to comply with the most current edition of The Elimination of Architectural Barriers Act, Texas Revised Civil Statutes:

A. All buildings regulated under The Elimination of Architectural Barriers Act, Texas Revised Civil Statues; and

B. All occupancies not regulated by (A), except:

   1. One and two-family dwellings;

   2. Apartments with fewer than ten dwelling units;

   3. Mechanical equipment rooms; and

   4. Warehouse portions of buildings.

Section 18.04 Compliance

A. Buildings regulated under State law and built in accordance with their State certified plans, including any variances or waivers granted by the State, shall be

deemed to be in compliance with the requirements of this Article.

B. Applications for permits not regulated by State law, but required to be accessible by this Article, shall be accompanied by plans and specifications indicating how compliance with this Article will be achieved, and shall be built in accordance with the accepted plans.

C. The Building Official may accept alternate methods of achieving accessibility than those required by this Article. If special or unusual conditions exist that make compliance to specific requirements of this Article impractical, the Building Code Board of Appeals may make exceptions to the accessibility requirements in this Article.

Section 18.05 **<u>References to Chapter 31, UBC</u>**

This article shall substitute for Chapter 31, <u>Accessibility</u> of the Uniform Building Code. All references to Chapter 31, in the text of the Code shall be deemed to mean Article XVII of the Construction Chapter.

2.

Any person, firm, corporation, agent or employee thereof who violates any of the provisions of this ordinance shall be guilty of a misdemeanor and upon conviction thereof shall be fined an amount not to exceed **Two Thousand and No/100 Dollars ($2,000.00)** for each offense. Each day that a violation is permitted to exist shall constitute a separate offense.

3.

This ordinance shall be and is hereby declared to be cumulative of all other ordinances of the City of Arlington; and this ordinance shall not operate to repeal or affect any of such other ordinances except insofar as the provisions thereof might be inconsistent or in conflict with the provisions of this ordinance, in which event such conflicting provisions, if any, in such other ordinance or ordinances are hereby repealed.

4.

If any section, subsection, sentence, clause or phrase of this ordinance is for any reason held to be unconstitutional, such holding shall not affect the validity of the remaining portions of this ordinance.

5.

All of the regulations provided in this ordinance are hereby declared to be governmental and for the health, safety and welfare of the general public. Any member of the City Council or any City official or employee charged with the enforcement of this ordinance, acting for the City of Arlington in the discharge of his/her duties, shall not thereby render himself/herself personally liable; and he/she is hereby relieved from all personal liability for any damage that might accrue to persons or property as a result of any act required or permitted in the discharge of his/her said duties.

6.

Any violation of this ordinance can be enjoined by a suit filed in the name of the City of Arlington in a court of competent jurisdiction, and this remedy shall be in addition to any penal provision in this ordinance or in the Code of the City of Arlington.

7.

The caption and penalty clause of this ordinance shall be published in a newspaper of general circulation in the City of Arlington, in compliance with the provisions of Article VII, Section 15, of the City Charter. Further, this ordinance may be published in pamphlet form and shall be admissible in such form in any court, as provided by law.

8.

This ordinance shall become effective ten (10) days after first publication as described above.

PRESENTED AND GIVEN FIRST READING on the 21st day of December, 1993, at a regular meeting of the City

Council of the City of Arlington, Texas; and GIVEN SECOND READING, passed and approved on the 4th day of January, 1994, by a vote of 8 ayes and 0 nays at a regular meeting of the City Council of the City of Arlington, Texas.

RICHARD E. GREENE, Mayor

ATTEST:

CINDY KEMP, City Secretary

APPROVED AS TO FORM:
JAY DOEGEY, City Attorney

BY Camille K Walker

Published FWST 02/20 & 27/95

ORDINANCE NO. 95-18

AN ORDINANCE AMENDING THE **"CONSTRUCTION"** CHAPTER OF THE CODE OF THE CITY OF ARLINGTON, TEXAS, 1987, THROUGH THE AMENDMENT OF **ARTICLE VII**, ENTITLED SIGNS, BY THE ADDITION OF A NEW **SECTION 7.10**, TEMPORARY SIGNS NEAR POLLING PLACES, TO REGULATE THE SIZE OF TEMPORARY SIGNS NEAR POLLING PLACES; PROVIDING FOR A FINE OF UP TO **$500** FOR EACH OFFENSE IN VIOLATION OF THE ORDINANCE; PROVIDING THIS ORDINANCE BE CUMULATIVE; PROVIDING FOR SEVERABILITY; PROVIDING FOR INJUNCTIONS; PROVIDING FOR GOVERNMENTAL IMMUNITY; PROVIDING FOR PUBLICATION AND BECOMING EFFECTIVE TEN DAYS AFTER FIRST PUBLICATION

WHEREAS, it is the purpose and intent of this amendment to Article VII of the "Construction" Chapter to establish reasonable regulations to avoid the appearance of visual clutter around polling places; to reduce the traffic hazard caused by such distractions to motorists and impairment of sight lines; to ensure that the city remains an attractive place to live and work; and to protect the health, safety, welfare, morals, convenience and comfort of the public; NOW THEREFORE,

BE IT ORDAINED BY THE CITY COUNCIL OF THE CITY OF ARLINGTON, TEXAS:

1.

That the **"Construction"** Chapter of the Code of the City of Arlington, Texas, 1987, is hereby amended through the amendment of Article VII, Signs, by the addition of a new Section 7.10, so that hereafter Section 7.10 shall be and read as follows:

Section 7.10 Temporary Signs Near Polling Places

A. No temporary sign shall be placed, erected, constructed or maintained at a size greater than six (6) square

feet in the area within the property lines of the property in which a polling place is located during the voting period. "Voting period" means the period beginning when a poll opens for early voting and election day voting and ending when the poll closes or the last voter has voted, whichever is later.

B. Signs shall not be located in City right-of-way.

C. Temporary signs need not comply with the provisions of Section 7.07 of this Chapter.

2.

Any person, firm, corporation, agent or employee thereof who violates any of the provisions of this ordinance shall be guilty of a misdemeanor and upon conviction thereof shall be fined an amount not to exceed **Five Hundred and No/100 Dollars ($500.00)** for each offense. Each day that a violation is permitted to exist shall constitute a separate offense.

3.

This ordinance shall be and is hereby declared to be cumulative of all other ordinances of the City of Arlington, and this ordinance shall not operate to repeal or affect any of such other ordinances except insofar as the provisions thereof might be inconsistent or in conflict with the provisions of this ordinance, in which event such conflicting provisions, if any, in such other ordinance or ordinances are hereby repealed.

4.

If any section, subsection, sentence, clause or phrase of this ordinance is for any reason held to be unconstitutional, such holding shall not affect the validity of the remaining portions of this ordinance.

5.

All of the regulations provided in this ordinance are hereby declared to be governmental and for the health, safety and welfare of the general public. Any member of the City Council or any City official or employee charged with the enforcement of this ordinance, acting for the City of

Arlington in the discharge of his/her duties, shall not thereby render himself/herself personally liable; and he/she is hereby relieved from all personal liability for any damage that might accrue to persons or property as a result of any act required or permitted in the discharge of his/her said duties.

6.

Any violation of this ordinance can be enjoined by a suit filed in the name of the City of Arlington in a court of competent jurisdiction, and this remedy shall be in addition to any penal provision in this ordinance or in the Code of the City of Arlington.

7.

The caption and penalty clause of this ordinance shall be published in a newspaper of general circulation in the City of Arlington, Texas, in compliance with the provisions of Article VII, Section 15, of the City Charter. Further, this ordinance may be published in pamphlet form and shall be admissible in such form in any court, as provided by law.

8.

This ordinance shall become effective ten (10) days after first publication as described above.

PRESENTED AND GIVEN FIRST READING on the 7th day of February, 1995, at a regular meeting of the City Council of the City of Arlington, Texas; and GIVEN SECOND READING, passed and approved on the 14th day of February, 1995, by a vote of 9 ayes and 0 nays at a regular meeting of the City Council of the City of Arlington, Texas.

RICHARD E. GREENE, Mayor

ATTEST:

Cindy Kemp

CINDY KEMP, City Secretary

APPROVED AS TO FORM:
JAY DOEGEY, City Attorney

BY Twaird Baker

ORDINANCE NO. 96-93

AN ORDINANCE AMENDING THE **"CONSTRUCTION"** CHAPTER OF THE CODE OF THE CITY OF ARLINGTON, TEXAS, 1987, THROUGH THE REPEAL OF THE EXISTING **ARTICLE I** THEREOF, AND THE ADOPTION OF A NEW ARTICLE I, ENTITLED BUILDING CODE, RELATIVE TO THE ADOPTION OF THE **1994 UNIFORM BUILDING CODE** WITH CERTAIN DELETIONS, AMENDMENTS AND ADDENDA; THROUGH THE AMENDMENT OF ARTICLE II, ENTITLED BUILDING CODE BOARD OF APPEALS, BY THE AMENDMENT OF **SECTION 2.05**, PROCEDURE, RELATIVE TO THE APPOINTMENT OF CHAIRMAN AND ADDITION OF A VICE-CHAIRMAN; BY THE AMENDMENT OF **SECTION 2.06**, APPEALS; TIME LIMIT, RELATIVE TO MAKING THE ORDINANCE GENDER NEUTRAL; THROUGH THE AMENDMENT OF ARTICLE III, ENTITLED MOVED BUILDINGS, BY THE AMENDMENT OF **SECTION 3.09**, OTHER RELOCATIONS, RELATIVE TO MAKING THE ORDINANCE GENDER NEUTRAL; THROUGH THE AMENDMENT OF ARTICLE IV, ENTITLED REGISTRATION, PERMITS AND INSPECTION, BY THE AMENDMENT OF **SECTION 4.01**, REGISTRATION, RELATIVE TO THE REQUIREMENT OF REGISTRATION TO CONSTRUCT OR REMOVE A SIGN, REQUIREMENT FOR A NOTARIZED STATEMENT AND THE DELETION OF THE REQUIREMENT FOR CONTRACTOR REGISTRATION FOR MINOR ACCESSORY STRUCTURES; BY THE AMENDMENT OF **SECTION 4.02**, PERMITS REQUIRED, RELATIVE TO THE REQUIREMENT OF A PERMIT TO CONSTRUCT OR REMOVE A SIGN; BY THE AMENDMENT OF **SECTION 4.03**, APPLICATION FOR PERMIT, SUBSECTION (F), RELATIVE TO MAKING THE ORDINANCE GENDER NEUTRAL; BY THE AMENDMENT OF **SECTION 4.04**, PLANS AND SPECIFICATIONS, RELATIVE TO REQUIRING COMPUTATIONS BE MADE AVAILABLE TO THE BUILDING OFFICIAL AND CHANGING THE OCCUPANCY GROUP "M" TO "U"; BY THE AMENDMENT OF **SECTION 4.05**, BUILDING PERMITS ISSUED, SUBSECTION (A), RELATIVE TO THE REVIEW OF PLANS BY CERTAIN CITY DEPARTMENTS; BY THE

AMENDMENT OF **SECTION 4.05(C)** RELATIVE TO MAKING THE ORDINANCE GENDER NEUTRAL; BY THE AMENDMENT OF **SECTION 4.07**, EXPIRATION OF PERMIT, RELATIVE TO THE FEE FOR A NEW PERMIT WHEN THE PREVIOUS PERMIT HAS EXPIRED DUE TO SUSPENSION OR ABANDONMENT OF WORK; BY THE AMENDMENT OF **SECTION 4.12**, REFUNDS, RELATIVE TO REFUNDS OF SERVICE CHARGES; BY THE AMENDMENT OF **SECTION 4.13(C)**, REQUIRED INSPECTIONS, RELATIVE TO MAKING THE ORDINANCE GENDER NEUTRAL; BY THE AMENDMENT OF **SECTION 4.13(D)**, OTHER INSPECTIONS, RELATIVE TO UPDATING THE SECTION NUMBER TO COMPLY WITH THE UNIFORM BUILDING CODE; BY THE DELETION OF **SECTION 4.14**, SPECIAL INSPECTIONS, AND THE RENUMBERING OF **SECTION 4.15**, CERTIFICATE OF OCCUPANCY, TO READ AS **SECTION 4.14**, CERTIFICATE OF OCCUPANCY, AND CREATING EXCEPTIONS TO THE USE OF OCCUPANCY REQUIREMENTS; BY THE RENUMBERING OF **SECTION 4.16**, INDEMNIFICATION, TO READ AS **SECTION 4.15**, INDEMNIFICATION; THROUGH THE AMENDMENT OF ARTICLE VII, ENTITLED SIGNS, BY THE AMENDMENT OF **SECTION 7.02**, IDENTIFICATION OF SIGNS, RELATIVE TO DELETING THE REQUIREMENT OF POSTING THE CITY PERMIT ON A SIGN; BY THE AMENDMENT OF **SECTION 7.04**, MAINTENANCE, RELATIVE TO DELETING REQUIREMENT OF TIME REQUIREMENTS FOR PAINTING OF SOME SIGNS; BY THE AMENDMENT OF **SECTION 7.06**, LOCATION RESTRICTIONS, RELATIVE TO PROVIDING AUTHORIZATION ELSEWHERE IN THE CODE FOR SIGNS; BY THE AMENDMENT OF **SECTION 7.07(B)**, WIND PRESSURE, RELATIVE TO UPDATING THE SECTION NUMBER TO COMPLY WITH THE UNIFORM BUILDING CODE; BY THE AMENDMENT OF **SECTION 7.07(C)**, WORKING STRESSES, RELATIVE TO UPDATING THE SECTION NUMBER TO COMPLY WITH THE UNIFORM BUILDING CODE; BY THE AMENDMENT OF **SECTION 7.08**, USE OF PLASTIC MATERIALS, RELATIVE TO THE UNIFORM BUILDING CODE STANDARDS; THROUGH THE AMENDMENT OF ARTICLE IX, ENTITLED FENCES, BY THE AMENDMENT OF **SECTION**

9.01, BARBED WIRE FENCE, RELATIVE TO PROHIBITING RAZOR WIRE FENCE WITHIN THE CITY LIMITS; BY THE AMENDMENT OF **SECTION 9.02**, ENCLOSURE OF SWIMMING POOLS, SPAS AND HOT TUBS, RELATIVE TO REQUIRING COMPLIANCE OF SWIMMING POOL ENCLOSURES TO MEET THE TEXAS HEALTH AND SAFETY CODE AND MEASUREMENT OF A WALL AROUND A SWIMMING POOL; THROUGH THE AMENDMENT OF ARTICLE XII, ENTITLED SANITARY FACILITIES, BY THE AMENDMENT OF **SECTION 12.01**, SANITARY SEWER CONNECTION DURING CONSTRUCTION, RELATIVE TO SANITARY FACILITIES FOR CONSTRUCTION PERSONNEL; THROUGH THE AMENDMENT OF ARTICLE XIII, ENTITLED OUTDOOR FESTIVALS, BY THE AMENDMENT OF **SECTION 13.02**, PROHIBITED ACTS, SUBSECTION (C), RELATIVE TO CHANGING "THE" TO "THIS"; BY THE AMENDMENT OF **SECTION 13.03**, APPLICATION FOR PERMIT, SUBSECTION (C), RELATIVE TO REQUIREMENTS OF THE BUILDING OFFICIAL; BY THE AMENDMENT OF **SECTION 13.08**, PERMIT DENIAL OR REVOCATION HEARING, SUBSECTION (D), RELATIVE TO MAKING THE ORDINANCE GENDER NEUTRAL; THROUGH THE AMENDMENT OF ARTICLE XIV, ENTITLED OVERSIZE AND OVERWEIGHT PERMITS, BY THE AMENDMENT OF **SECTION 14.01**, APPLICATION AND PERMIT REQUIREMENTS, SUBSECTION (B)(2), RELATIVE TO MAKING THE ORDINANCE GENDER NEUTRAL; THROUGH THE AMENDMENT OF ARTICLE XVI, ENTITLED LIFE SAFETY REQUIREMENTS FOR EXISTING BUILDINGS, BY THE AMENDMENT OF **SECTION 16.02**, SCOPE, RELATIVE TO UPDATING THE TABLE AND SECTION NUMBER TO COMPLY WITH THE UNIFORM BUILDING CODE; THROUGH THE AMENDMENT OF ARTICLE XVII, ENTITLED DANGEROUS BUILDINGS, BY THE AMENDMENT OF **SECTION 17.02**, DANGEROUS BUILDING DEFINED, RELATIVE TO CHANGING THE 1991 EDITION OF UNIFORM CODE FOR THE ABATEMENT OF DANGEROUS BUILDING TO READ THE 1994 EDITION; BY THE AMENDMENT OF **SECTION 17.02(O)**, RELATIVE TO MAKING THE ORDINANCE GENDER NEUTRAL; BY THE AMENDMENT OF **SECTION 17.02(P)**, RELATIVE TO MAKING THE ORDINANCE GENDER NEUTRAL;

THROUGH THE AMENDMENT OF **ARTICLE XVIII**, ENTITLED ACCESSIBILITY, RELATIVE TO ACCESSIBILITY STANDARD REQUIREMENTS OF THE CITY; PROVIDING FOR A FINE UP TO **$2,000** FOR EACH OFFENSE IN VIOLATION OF THE ORDINANCE; PROVIDING THIS ORDINANCE BE CUMULATIVE; PROVIDING FOR SEVERABILITY; PROVIDING FOR GOVERNMENTAL IMMUNITY; PROVIDING FOR INJUNCTIONS; PROVIDING FOR PUBLICATION AND BECOMING EFFECTIVE TEN DAYS AFTER FIRST PUBLICATION

BE IT ORDAINED BY THE CITY COUNCIL OF THE CITY OF ARLINGTON, TEXAS:

1.

That the **"Construction"** Chapter of the Code of the City of Arlington, Texas, 1987, is hereby amended through the repeal of the existing Article I and the adoption of a new Article I, so that hereafter said Article shall be and read as follows:

ARTICLE I

BUILDING CODE

Section 1.01 Title

This Chapter shall be known as the "Building Code" of the City of Arlington.

Section 1.02 Adoption of Code

The Uniform Building Code, 1994 Edition, Volumes 1 and 2 (hereinafter called "U.B.C."), as published by the International Conference of Building Officials, is hereby adopted and designated, together with the deletions, amendments and addenda hereinafter contained, as the Building Code of the City of Arlington, the same as though said U.B.C. were copied at length herein. Copies of the U.B.C. and its Appendices shall be kept on file in the Office of the City Secretary.

Section 1.03 **Code Defined; Rule of Construction**

This Building Code shall include all of the provisions of the U.B.C. as adopted by Section 1.02 above and all other provisions contained herein. In the event a conflict is determined to exist between said U.B.C. as adopted and the other provisions of this Chapter, the latter provisions shall be construed as controlling and taking precedence over the former.

Section 1.04 **Amendments, Additions and Deletions**

The adoption of the U.B.C., as provided in Section 1.02 above, is modified and amended by the following:

A. The addition thereto of Articles II, et seq., of this Chapter.

B. The deletion in the entirety of the following provisions of the U.B.C.:

(1) Section 102, entitled Unsafe Buildings or Structures;
(2) Section 103, entitled Violations;
(3) Section 105, entitled Board of Appeals;
(4) Section 106, entitled Permits;
(5) Section 107, entitled Fees;
(6) Section 108, entitled Inspections; and
(7) Section 109, entitled Certificate of Occupancy.
(8) Section 3102.3.8 entitled Spark Arrester;
(9) Appendix Section 1515, entitled Inspections;

C. The amendment of the following U.B.C. provisions:

(1) The amendment of Section 101.3, entitled Scope, by the addition of the following "EXCEPTION" between the first paragraph and the second paragraph:

EXCEPTION: Storage buildings not exceeding three hundred (300) square feet in area shall not be subject to the provisions of this Building Code provided:

(a) The building shall not be intended or used for human occupancy;

(b) Any mechanical, electrical or plumbing work shall be installed in full compliance with

the appropriate Chapter of the Code of the City of Arlington for such work;

(c) A building on commercial property shall be anchored at each corner: said anchorage shall equal or exceed a concrete pier ten inches (10") in diameter and eighteen inches (18") in depth embedded with a standard one-half inch (½") diameter anchor bolt;

(d) The building shall be not closer than five feet (5') to a property line in residential areas and ten feet (10') to a property line in non-residential areas: subject, however, to any more restrictive setbacks contained in the "Zoning" Chapter of the Code of the City of Arlington: further, storage buildings on commercial property shall be separated from other structures and property lines as specified by U.B.C., Chapter 5;

(e) The building shall be maintained in good repair;

(f) There shall be not more than one (1) such building on any property occupied for other than residential use; and

(g) A permit for such building shall have been obtained from the Building Official.

(2) The amendment of Section 104.2.3, entitled Right of Entry, to read as follows:

Whenever necessary to make an inspection to enforce any of the provisions of this Building Code, or whenever the Building Official or an authorized representative has reasonable cause to believe that there exists in any building or upon any premises any condition or violation which makes such building or premises unsafe, dangerous or hazardous, the Building Official or an authorized representative may enter such building or premises at all reasonable times to inspect the same or to perform any duty imposed upon said Building Official by this Building Code. If such building or premises be occupied, the Building Official shall first present proper credentials and request entry. If such building or premises

be unoccupied, the Building Official shall first make a reasonable effort to locate the owner or other person having charge or control of the building or premises and request entry. If such entry is refused, or, if no owner or other person having charge or control of the building or premises can be located, the Building Official or an authorized representative shall have recourse to every remedy provided by law to secure entry.

(3) The amendment of Section 104.2.5, entitled Occupancy Violations, to read as follows:

Whenever any building, structure, or equipment therein which is regulated by this Building Code is being used contrary to the provisions of said Code, the Building Official or an authorized representative may order that such use be discontinued and/or that the building or structure, or a portion thereof, be vacated by written notice served on any person who is causing such use to be continued. Further, the Building Official or an authorized representative may order the evacuation of any building or premises, or a portion thereof, which constitutes a dangerous building as defined in Article XVII of this Chapter.

Notice to stop use shall be given by personal delivery or by certified mail, return receipt requested, to the person responsible for the continued use. Such person shall discontinue the use within the time prescribed by the Building Official after receipt of such notice and shall not resume the use of the building or premises until first rendering the same in compliance with this Building Code.

Notice to vacate a dangerous building or premises shall be posted at or upon each exit of the said structure affected thereby, and shall be in substantially the following form:

"DO NOT ENTER
UNSAFE TO OCCUPY

It is a misdemeanor to occupy this building, or to remove or deface this notice.

Arlington Building Official
(by)_____
(date)_____
(compliance due date)_____"

No person shall remain in or enter any building or premises which has been so posted, except that entry may be made to repair, demolish or remove the unsafe condition. Such entry or the destruction, defacing or removal of said notice prior to approval by the Building Official or an authorized representative shall be a violation of this Building Code.

(4) The amendment of the definition of "SHALL" contained in Section 220, so that said definition shall read as follows:

SHALL, as it applies to an act or duty to be performed by the Building Official pursuant to any section of this Building Code, is discretionary. Its use in all other applications in this Code shall be mandatory.

(5) The amendment of Section 302.4, entitled Fire Ratings for Occupancy Separations, so that "EXCEPTIONS", paragraph 3 shall read as follows:

Occupancy separation between a dwelling (including its attic area) and its private garage may be accomplished by a one-half inch (½") thickness of standard gypsum board, with treated joints, applied at the garage side. A door opening shall have a tight-fitting door. Fire dampers need not be installed in air duct openings located in such walls or ceiling.

(6) The amendment of Section 310.9.1.2 entitled, Additions, Alterations, or Repairs to Group R Occupancies, and Section 310.9.1.3, entitled Power Source, to read as follows:

310.9.1.2. Smoke detectors in existing Group R Occupancies, except Division 1 apartment houses and hotels, shall be installed in accordance with 310.9.1.3, 310.9.1.4 and 310.9.1.5 of this subsection, either when the interior of the dwelling unit is repaired, remodeled or rebuilt at a projected cost of more than $1,000.00, and such

work requires a permit, or when a sleeping room is added or created, smoke detectors in existing Group R, Division 1 apartment houses and hotels shall be installed in compliance with the "Fire Prevention" Chapter.

310.9.1.3 Smoke detectors shall receive their primary power from the building wiring when such wiring is served from a commercial source, and shall be equipped with a battery backup. The detector shall emit a signal when the batteries are low. Wiring shall be permanent and without a disconnecting switch other than those required for over current protection. Smoke detectors may be solely battery operated when installed in buildings without commercial power.

(7) The amendment of Section 311.2.3.2, entitled Marine or Motor Vehicle Fuel Dispensing Stations, so that the third paragraph reads as follows:

A one hour occupancy separation need not be provided between fuel dispensing pumps covered with a canopy that is open on three or more sides, and a group M occupancy retail store having an area of less than 3,000 square feet (270m^2) when the following conditions exist:

(8) The amendment of Section 805, entitled Textile Wall Coverings, to read as follows:

When used as interior wall finish, textile wall coverings, including materials such as those having a napped, tufted, looped, nonwoven, woven or similar surface, shall have a Class I flame spread.

(9) The amendment of Section 904.1.1, entitled General, to read as follows:

All fire-extinguishing systems required in this Building Code shall be installed in accordance with the requirements of this Chapter except that all references to U.B.C. Standards 9-1 and 9-2 are deleted and replaced by the applicable National Fire Protection Association Standards 13, 13-D and 14 governing such items.

Required automatic sprinkler systems in Group R Occupancies of 4 stories or less may be designed in accordance with NFPA No. 13-R (1989). Sprinkler protection shall be provided throughout, including the means of egress, patios and balconies.

EXCEPTION: Attic areas and concealed intermediate under floor spaces may be unprotected when approved fire lane access, fire hydrants, fireflow, and an approved fire alarm system is provided.

Fire hose threads used in connection with fire-extinguishing systems shall be National Standard hose threads or alternatives approved by the Chief of the Fire Department of the City of Arlington.

In buildings used for high-piled combustible storage, fire protection shall be in compliance with the applicable provisions of the "Fire Code" Chapter of the Code of the City of Arlington.

(10) The amendment of Section 904.2.2, entitled All Occupancies Except Group R, Division 3 and Group U, by the addition of Paragraph 5, to read as follows:

All buildings three (3) or more stories in height shall have an automatic sprinkler system except Group S-4 open parking garages of freestanding Type I construction and Group R-3 single family dwelling occupancies with approved Fire Department access.

(11) The amendment of Section 904.2.3.6, entitled Amusement Buildings, to read as follows:

An automatic sprinkler system shall be installed in all amusement buildings (as defined in this code). The main water-flow switch shall be electrically supervised. The sprinkler main cutoff valve shall be supervised.

EXCEPTION: An automatic sprinkler system need not be provided for amusement buildings actually operating not more than thirty (30) consecutive days.

(12) The amendment of Section 904.2.8, entitled Group R, Division 1 Occupancies, by the addition of the following paragraph:

For the purpose of establishing automatic sprinkler requirements in this section, area separation walls as described in U.B.C., Section 504.6 shall not constitute separate buildings.

(13) The amendment of Section 1005.7, entitled Construction, so that "EXCEPTIONS", number 5, shall read as follows:

Group B Office Occupancies when the corridor is within a space occupied by a single tenant.

(14) The amendment of Section 1005.7, entitled Construction, by the addition of Exception 9 to read as follows:

9. Corridors of fully sprinklered buildings in all occupancies except Group R, Division 1, and Group I, Division 3. (See exception 4 of this subsection for portions of Group I, Division 3, Occupancies having open-barred cells.)

(15) The amendment of Section 1006.1, entitled General, to read as follows:

Every stairway having two (2) or more risers serving any building or portion thereof, inside or outside a structure, shall conform to the requirements of this section. When aisles in assembly rooms have steps, they shall conform with the provision in Section 1014.

EXCEPTION: Stairs or ladders used only to attend equipment are exempt from the requirements of this section.

(16) The amendment of Section 1203.3, entitled Ventilation, to delete all specific mentions of "laundry rooms."

(17) The amendment of Table 15-A, entitled "Minimum Roof Classes," to read as follows:

TABLE NO. 15-A MINIMUM ROOF CLASSES[2]
Types of Construction

	I	II			III		IV	V	
OCCUPANCY	F.R.	F.R.	1-HR	N	1-HR	N	H.T.	1-HR	N
A-1	B	B	-	-	-	-	-	-	-
A)2-2.1	B	B	B	-	B	-	B	B	-
A-3	B	B	B	B	B	B	B	B	B
A-4	B	B	B	B	B	B	B	B	B
B	B	B	B	B	B	B	B	B	B
E	B	B	B	B	B	B	B	B	B
H-1	A	A	A	A	-	-	-	-	-
H)2-3-4-5-6-7	A	B	B	B	B	B	B	B	B
I)1.1-1.2-2	A	B	B	-	B	-	B	B	-
I-3	A	B	B[1]	-	B[1]	-	-	B	-
M	B	B	B	B	C	C	C	C	C
R-1	B	B	B	B	C	C	C	C	C
R-3	B	B	B	B	C	C	C	C	C
S-1, S-3	B	B	B	B	B	B	B	B	B
S-2, S-5	B	B	B	B	B	B	B	B	B
S-4	B	B	B	B	-	-	-	-	-
U	B	B	B	B	C	C	C	C	C

[1]See U.B.C., Section 308.2.2.2

[2]Existing roof coverings shall not be required to conform with this table. Any new

A-Class A Roof Covering
B-Class B Roof Covering
C-Class C Roof Covering
N-No requirements for fire resistance

shingles installed, including replacements shall conform to the table. Exception: When replacement of shingles are less than 10% of the roof area per calendar year, new shingles may be of the same type as the existing roof.

F.R.-Fire Resistive
H.T.-Heavy Timber

(18) The amendment of Section 1609.2, entitled Retaining Walls, by the addition of the following paragraph and "EXCEPTION":

Retaining walls exceeding three feet (3') in height shall be constructed of materials other than wood, including treated wood products, and shall be designed by a professional engineer. A wall built in tiers shall be considered a single wall in height when the upper tier is set back less than one and one-half (1½) times the height of the wall section below.

EXCEPTION: Retaining walls erected on properties used for Group R-3 occupancies may be constructed up to six feet (6') in height of any approved materials. These retaining walls shall be designed by a professional engineer when exceeding a height of four feet (4'). Unless specifically approved by the Building Official, such walls shall not support a building, driveway or other permanent construction closer to the wall than one and one-half (1½) times the full height of the wall.

(19) Section 1701.1 shall be amended to read:

All construction or work for which a permit is required shall be subject to inspection by the Building Official. The Building Official may require certain types of construction to have continuous inspection by special inspectors as specified in Chapter 17 of this code.

(20) The amendment of Section 1903.6, entitled Admixtures, 1903.6.1 to read as follows:

Calcium chloride shall not be used in residential foundation concrete, except in a design approved by the Building Official or an authorized repre-

sentative and which is submitted by a registered architect or engineer.

(21) The amendment of Section 1905.7, entitled Preparation of Equipment and Place of Deposit, by the addition of Paragraph 8 to read as follows:

For concrete floor slabs supported directly on the ground in Group R-3 Occupancies, a vapor barrier approved by the Building Official or an authorized representative shall be installed beneath the slab.

(22) The amendment of Section 2320.4, entitled Shingles or Shakes, by the addition of the following "EXCEPTION":

EXCEPTION: Wood shingles and shakes shall not be used as an exterior wall covering within seven feet (7') of grade for Group R-1 Occupancies.

All wood shingles or shakes to be used as an exterior wall covering for Group R-1 Occupancies shall be fire-retardant shakes and shingles. Fire-retardant shakes and shingles are wood shakes and shingles complying with U.B.C. Standard No. 15-3 or 15-4 impregnated by the full-cell vacuum-pressure process with fire retardant chemicals, and have been qualified by U.B.C. Standard No. 15-2 for use on Class A, B or C roofs. Each bundle of treated wood shakes and shingles shall bear labels identifying their roof covering classification and approved quality control agency.

(23) The amendment of Section 2406.4, entitled Hazardous Locations, number 8, so that "EXCEPTION", number 5, shall read as follows:

Assemblies of leaded, faceted or carved glass, in items 1, 2, 6 and 7 when used for decorative purposes or item 5 when not equipped with a showerhead.

(24) The amendment of Section 2902.3, entitled Groups B, F, H, M and S Occupancies, to read as follows:

In Groups B, F, H, M and S Occupancies, every building or portion thereof where persons are

employed shall be provided with sanitary facilities which comply with the "Plumbing" Chapter of the Code of the City of Arlington and shall be provided with at least one (1) water closet. Separate facilities shall be provided for each sex when the number of employees exceeds ten (10). Such toilet facilities shall be located either in such building or conveniently in a building adjacent thereto on the same property.

Such water closet rooms in connection with food establishments where food is prepared, stored or served shall have a nonabsorbent interior finish as specified in Section 807.1, shall have handwashing facilities therein or adjacent thereto, and shall be separated from food preparation or storage rooms as specified in Section 302.6.

For other requirements on water closets, see Section 2904.

(25) The amendment of Section 3003.6, entitled Emergency Signs, to read as follows: "An approved pictorial sign of a standard design shall be posted adjacent to each elevator call station which will indicate that, in case of fire, the elevator will not operate and that exit stairways should be used."

(26) The amendment of Section 3301.1, entitled General, by the addition of the following five (5) paragraphs and one (1) "EXCEPTION" between the first and second paragraphs:

Should trench excavations exceed five feet (5') in depth, bid documents and construction contracts must include provisions for specifications for adequate safety systems that meet Occupational Safety and Health Administration (OSHA) standards. Further, these plans and specifications shall include a pay item for these safety systems, which is to be a part of the contract. In addition, a safety program outline shall be provided to the property owner by the contractor and the contractor's safety record shall be reviewed as a condition of the contract award.

Prior to performing such excavations, the contractor must submit plans and specifications for

trench shoring to the Building Official for review. The plans shall be stamped, signed and dated by a registered professional engineer attesting that these plans meet OSHA requirements in accordance with state law.

The contract requirements of this Section shall not apply to contracts entered into with persons subject to the safety standards adopted under V.A.C.S., Article 6053-1, entitled Transportation of Gas and Gas Pipeline Facilities.

Acceptable fill shall only be comprised of one (1) or more of the following materials: Dirt, concrete or asphalt. No person shall cause, allow, suffer or permit fill containing any other material to be used for any building, structure, foundation or retaining structure.

No person shall cause, allow, suffer or permit fill to be placed or stored, upon any undeveloped lot not currently experiencing ongoing construction, in such a manner that said fill is not spread uniformly so that no area of fill differs in height by more than twenty-four inches (24") from any other area of fill on said lot. Provided, however, that upon written notice by the Building Official or a designated representative, the record property owner of any such lot shall be allowed forty-five (45) days to remove or spread said fill in order to comply with this provision. Notice shall be deemed sufficient for this purpose if mailed, by certified mail, return receipt requested, to the last-known address of the record property owner, or if personally delivered to said owner.

EXCEPTION: This provision shall not apply to fill located upon the premises of a business which provides said fill to others for compensation. A valid certificate of occupancy for such business shall be sufficient to establish the applicability of this exception.

(27) The amendment of Appendix B, Chapter 4, Division I, Section 419, entitled General, to read as follows:

The provisions of this section shall apply to the design and construction of barriers for all swimming pools.

EXCEPTION: The following uses are regulated by State statute and are not subject to this section:

1. Group R-1 apartments.

2. A pool owned, controlled, or maintained by the owner of a multi-unit rental complex or by property owners association.

(28) The amendment of Appendix B, Chapter 4, Division I, Section 421.1, entitled Outdoor Swimming Pool, by the addition of an exception to number 4 to read as follows: "Exception: Driveway access gates across a paved or improved surface intended for regular vehicle access shall not be located in a swimming pool barrier."

(29) The amendment to Appendix B, Chapter 4, Division I, Section 420 entitled Definitions, by the addition of the following definitions:

Multi-unit Rental Complex is two or more dwelling units in one or more buildings that are under common ownership, managed by the same owner, managing agent, or management company, and located on the same lot or tract of land or adjacent lots or tracts of land. The term includes a condominium project. The term does not include:

(A) A facility primarily renting rooms to overnight guests; or

(B) A single-family home or adjacent single-family homes that are not part of a condominium project.

Pool Deck is a flat walking surface consisting of wood, stone, brick, concrete or other similar material located within five feet (5') of the waters edge of a swimming pool or spa.

Property Owners Association is an association of property owners for a residential subdivision, condominium, cooperative, townhome project, or other project involving residential dwellings.

Self-Closing Gate is a gate which closes or shuts automatically, without the aid of human, electrical, solar or battery power after being opened.

Self-Closing and Self-Latching Device is a device that causes a gate to automatically close and latch without human, electrical, solar or battery power.

Section 1.05 Adoption of Appendices

The following referenced provisions of the U.B.C. annexed hereto as appendices, the same being either attached hereto or incorporated herein by reference, are made a part of this Building Code.

Appendix A. The entire provisions, except Chapter 9, of the Uniform Building Code Standards, Volume 3, 1994 Edition, as promulgated by the International Conference of Building Officials.

Appendix B. Only Chapter 4, Division II, entitled Aviation Control Towers, Chapter 3, Division I, entitled Detention and Correctional Facilities, Chapter 3, Division II, entitled Agricultural Buildings, Chapter 4, Division I, entitled Barriers for Swimming Pools, Spas and Hot Tubs, Chapter 15, entitled Reroofing, Chapter 31, Division III, entitled Patio Covers, and Chapter 31, Division II, entitled Membrane Structures, of the Appendix to the Uniform Building Code, 1994 Edition.

All other Chapters of said Appendix to the U.B.C. are hereby omitted from this Building Code.

Appendix C. The form of the surety bonds required by the provisions of this Building Code.

Section 1.06 Construction Prohibited in Public Easements

A. Regardless of materials, manner of construction or unique characteristics of land, it shall be unlawful for any person, firm or corporation to cause or permit the installation, revision or relocation of any construction improvement where any part of such improvement is to be located in a public easement. The

foregoing prohibition shall not apply to proposed improvements in utility easements consisting of paving, flatwork, wooden or chain link fences or retaining walls less than three feet (3') in height which do not support a structure, provided that the proposed improvements have been approved in writing by the Building Official with the concurrence of the City Engineer and the Director of Water Utilities prior to their construction.

B. In cases where improvements other than those listed in Subsection (A) above are proposed in City easements, application shall be made to the Building Official for the execution of an Easement Joint-Use Agreement. If, in the determination of the Building Official after conferring with the other appropriate departments of the City of Arlington, such Joint-Use Agreement cannot be executed, the Building Official will refer the request to the Building Code Board of Appeals for final determination.

C. The City of Arlington shall not be liable for damages or losses of any kind whatsoever by reason of injury to property or person occasioned by the use of any easement. The City shall have no obligations in regards to the maintenance of any improvements within such easement or right-of-ways. The City shall be defended at the cost and expense of the person placing improvements in any easements or right-of-ways from all claims and demands. The use of any easement in right-of-ways shall be discontinued and improvements removed within 30 days of notification by the City and the cost of the discontinuation and removal of improvements shall be borne by the owner of the improvement.

D. The term "improvement" includes, but is not limited to, concrete or asphalt paving, swimming pools, fences, retaining walls, temporary or permanent buildings, earth fill or excavation and landscaping. "Improvements" shall not include public or private mailboxes, or poles and boxes necessary for public utility services.

The term "easement" shall include easements for right-of-way, streets, drainage and utilities.

Section 1.07 **<u>Requirements for Drainage</u>**

A. No person, firm or corporation within the corporate limits of the City of Arlington, Tarrant County, Texas, shall do, cause or permit to be done, the installation, modification or relocation of any construction improvement where the improvement, when completed, will significantly increase the speed or volume of water flowing across or standing on other property which is either upstream or downstream from the property on which the improvement is to be made so as to cause damage to such other property, nor shall the Building Official be required to issue a building permit where engineering data from a qualified professional engineer reveals that such improvement would worsen any existing drainage or flooding problem or would cause any damage to such other property.

B. The term "improvement" means any of those things which require a building permit, such as buildings (either permanent or temporary), land development, concrete or asphalt paving, swimming pools, fences, retaining walls, earth fill or excavation and landscaping. "Improvement" shall not include poles or boxes necessary for public utility service.

C. Prior to obtaining a building permit, and to ensure that there will be no surface drainage problems after the construction of the proposed improvement, an acceptable drainage plan will be filed with the Building Inspections Department of the City of Arlington which accurately shows all run-off water which comes onto the property being so improved, the method of conveying the water across the property, and the method and place of discharge for the run-off water leaving the property. Such plans shall show the capacity of the adjacent property, public way, easement or drainage facility, as the case may be, to receive such amounts of water. No surface drainage plan is required to be filed with said City for improvements on lots containing or to contain group R-3 occupancies, provided the drainage for such improvement is made to comply with H.U.D. (F.H.A.) Requirements for surface drainage as contained in the current H.U.D. Data Sheet 72 or H.U.D. Data Sheet 73 as the same may, from time to time, be amended. Such requirements and future amendments are incorporated in this Building Code and made a part hereof for all purposes: provided, however, that the Building Official may require the

submission of a surface drainage plan for such exempt properties when, in the Building Official's opinion, such plan is necessary to prevent a drainage problem. If the builder wants the drainage for any improvement on such exempt properties to deviate from H.U.D. (F.H.A.) requirements, then an acceptable drainage plan meeting the requirements contained in this Section must be submitted by the builder.

D. All construction of improvements shall be done to comply with an approved drainage plan as provided for in this Section or H.U.D. (F.H.A.) Requirements, as applicable.

Section 1.08 <u>Enforcement, Violations and Penalties</u>

A. It shall be unlawful for any person, firm or corporation to erect, construct, enlarge, alter, repair, move, improve, remove, convert, demolish, equip, use, occupy or maintain any building, structure or premises in the City of Arlington, or cause or permit the same to be done, contrary to or in violation of any of the provisions of this Building Code.

B. Any person, firm or corporation violating any of the provisions of this Building Code shall be deemed guilty of a misdemeanor and each day the violation continues shall be a separate offense. Each offense shall be punishable by a fine of not more than Two Thousand Dollars and No Cents ($2,000.00).

C. In addition to the power of the Building Official under U.B.C., Section 104.2.3, entitled "Right of Entry," to inspect a building pursuant to this Building Code, any peace officer may enter the public areas of any building or premises, or any areas specified in a proper inspection warrant, at all reasonable times wherever necessary in the performance of official duties to inspect and investigate for violations of any law, or to enforce any law, including violations of this Building Code. The peace officer shall first present proper credentials and request entry, unless otherwise permitted by law. If such entry is refused or, if no owner or other person having charge or control of the building or premises can be located, the peace officer shall have recourse to every remedy provided by law to secure entry.

D. No owner, occupant or any other person having charge, care or control of any building or premises shall fail or neglect, after proper request is made pursuant to Subsection (C) above, to promptly permit entry therein by a peace officer in the performance of his duty. Any person violating this Subsection shall be guilty of a misdemeanor.

Section 1.09 <u>Skateboard Ramps</u>

A. As used in this Section, the phrase "skateboard ramp" shall refer to a structure or piece of work artificially built up or composed of parts joined together in some definite manner, regardless of the materials used or the manner of construction, which is primarily used for, or designed and intended for primary use as, a ramp for skating or skateboarding activities.

B. It shall be unlawful for any person to erect, construct, keep, maintain or use a skateboard ramp that is located:

(1) at a distance closer than one hundred fifty feet (150') from any building located on another's property that is used or intended to be used for habitation, regardless of whether the habitation existed prior to the erection of said skateboard ramp; or

(2) at a distance closer than fifty feet (50') from the property line of the lot where said skateboard ramp is located.

C. Should a habitation be placed on another's property closer than one hundred fifty feet (150') to an existing skateboard ramp, the owner of said skateboard ramp shall remove or relocate, or cause to be removed or relocated, said skateboard ramp within ninety (90) days of the completion of construction of the habitation.

D. Failure to remove or relocate, or cause to be removed or relocated, a skateboard ramp as required by this Section shall constitute a misdemeanor. Each day that a skateboard ramp remains in violation of this Section shall constitute a separate offense.

Section 1.10 Presumption

Unless otherwise specified in this Chapter, the owner, occupant or person in control of any building or premises where any violation of this Building Code is found shall be prima facie responsible for such violation.

Further, Article II is hereby amended by the amendment of **Section 2.05**, Procedure, so that hereafter said section shall be and read as follows:

Section 2.05 Procedure

The Chairman shall be appointed in accordance with the Administration Chapter of the City Code. The Board shall select a vice-chairman and shall further establish rules and regulations for its own procedures not inconsistent with the provisions of this Building Code. The Board shall meet at regular intervals to be determined by the Chairman, and the Board shall meet within thirty (30) days after notice of any appeal has been received.

Further, Article II is hereby amended by the amendment of **Section 2.06**, Appeals; Time Limit, so that hereafter said section shall be and read as follows:

Section 2.06 Appeals; Time Limit

A. The owner of premises who seeks to erect or alter a building or structure on said premises, or an authorized agent, may appeal from a decision of the Building Official to the Board if:

(1) The Building Official shall reject or refuse to approve the mode or manner of construction proposed to be followed, or the materials proposed to be used, in the erection or alteration of said building or structure; or

(2) Said owner claims that the provisions of this Building Code do not apply to the proposed construction; or

(3) Said owner claims that an equally good or more desirable form of construction or materials can be employed in the proposed construction than the Building Official requires; or

(4) Said owner claims that the true intent and meaning of this Building Code or of any of its regulations have been misconstrued or wrongly interpreted.

An administrative fee, as set by resolution of the Arlington City Council, shall accompany the notice of appeal which the owner or an authorized agent must file in writing with, and on a form provided by, said Building Official.

B. The notice of appeal shall be filed within thirty (30) days after the Building Official renders a decision: provided, however, that said Building Official may limit the time for appeal to a shorter period in cases involving buildings or structures that are, in the Building Official's opinion, unsafe or dangerous.

C. Initiating work, progressing with that portion of work which is the particular issue on appeal, or progressing with work which would cover the matter on appeal, shall void such appeal.

Further, Article III is hereby amended by the amendment of **Section 3.09**, Other Relocations, so that hereafter said section shall be and read as follows:

Section 3.09 Other Relocations

All improvements other than those specified in Section 3.08 above on a lot from which a building has been moved must be removed, including the foundation, plumbing, accessory structures, etc., unless specific written authorization to leave said improvements is given to the mover by the Building Official or an authorized representative.

Further, Article IV is hereby amended by the amendment of **Section 4.01**, Registration, so that hereafter said section shall be and read as follows:

Section 4.01 Registration

A. **Registration Required**. It shall be unlawful for any person, firm or corporation to erect, construct, enlarge, alter, repair, move, improve, remove, convert or demolish any building, sign or structure in the City of Arlington, or cause the same to be done, unless such

person, firm or corporation is the holder of a valid registration with said City to perform such work. Such person, firm or corporation shall be herein termed Registrant. In extending the rights and privileges of such registration, said City makes no statement of the technical competency of those so registered, and no manner of license is proffered.

B. **Information to be Provided**. An applicant for registration under this article shall provide to the Building Official the following information:

1. The complete name, complete mailing address and telephone number of the firm or corporation;

2. The name and private mailing address of a principal of the firm or corporation who is a person authorized to bind the firm or corporation in legal agreements;

3. If the registration is to be as an individual only, the name, mailing address and telephone number of the individual; and

4. Other pertinent information deemed necessary by the Building Official.

Every Registrant shall contact the office of the Building Official to ensure the accurate revision of registration information, including any change of address or telephone number, within ten (10) days from the date that the previous information supplied in the application becomes invalid for any reason. Failure to revise inaccurate information, or providing false, misleading or inaccurate information when applying for registration, shall constitute an offense.

Every Registrant doing work in any City rights-of-way shall carry Contractor's Public Liability Insurance with a combined single limit of not less than Five Hundred Thousand and No/100 Dollars ($500,000.00) per occurrence, with an aggregate of not less than Five Hundred Thousand and No/100 Dollars ($500,000.00). The Registrant shall make the City of Arlington a Certificate Holder and present proof of insurance at the time of registration and all subsequent renewals. Notice of policy cancellations or failure to renew coverage shall be cause for revocation of registration, denial of inspections or cancellation of permits.

C. **Building Official Shall Respond**. After application for registration has been received, the Building Official shall act promptly to issue the registration or to determine upon what basis the registration may not be issued. The Building Official shall respond to the applicant not later than two (2) weeks following receipt of the application.

D. **Expiration and Renewal of Registration**. Expired registrations shall be routinely reactivated by payment of a renewal fee if the application information remains accurate. Fees for initially establishing registration and for renewal of registration shall be set in accordance with Section 4.09 below. A registration may be renewed without penalty at any time from sixty (60) days preceding the date of expiration through ninety (90) days following the date of expiration. A registration not renewed for ninety (90) days beyond the date of expiration shall require resubmittal of registration information and payment of a fee as for an initial registration.

E. **Transfer of Registration Prohibited**. No Registrant under this article shall for any purpose allow the registration, by name or other identification, to be transferred or assigned to, or in any manner directly or indirectly used by, any person, firm or corporation other than the one to whom the registration was issued. Company representatives other than the registered principal shall be required to have a notarized statement from the principal in order to transact business.

F. **Registration Suspended**. The Building Code Board of Appeals shall have the authority to suspend any registration issued under this article for any of the following acts by the Registrant:

1. Forfeiting an appeal of a Stop Order issued under U.B.C., Section 104.2.4, by continued work after the issuance of said Stop Order;

2. Forfeiting an appeal under Section 2.06(C) above of this Building Code by initiating work in violation of the Board's decision or prior to the Board's decision;

3. Causing or permitting the unauthorized or prohibited transfer or assignment of a valid registra-

tion, or providing false, misleading or inaccurate information when applying for registration; or

4. Being convicted in Municipal Court of two (2) violations of any of the provisions of this Building Code committed within a period of twelve (12) consecutive months: provided, however, that remedy of the violation within twenty (20) days of a Stop Order shall cause the waiver of any conviction for the original violation for the purpose of this subsection.

Such suspension of registration shall be for a time not to exceed six (6) months. After expiration of such period of time as the Board shall have designated, and after payment of any outstanding fines and the routine renewal fee if it has become due in the interim, the suspended registration shall again become valid and effective for the balance of its time until expiration or a subsequent suspension or revocation.

G. **Registration Revoked**. The Building Code Board of Appeals shall have the authority to revoke any registration issued under this article for:

1. Conviction of the practice of any fraud or deceit in securing a registration or a permit, or of a violation of Subsection (E) above;

2. Convictions in Municipal Court of three (3) violations of any of the provisions of this Building Code committed within a period of twelve (12) consecutive months: provided, however, that remedy of the violation within twenty (20) days of a Stop Order shall cause the waiver of any conviction for the original violation for the purpose of this subsection;

3. Accumulation of two (2) decisions of the Board to suspend registration; or

4. Accumulation within a period of twelve (12) months of two (2) forfeitures of appeals of Stop Orders issued under U.B.C., Section 104.2.4, by continued work after the issuance of said Stop Orders.

Such revocation of registration by the Board shall be full and final cancellation of such registration and shall be effective on the date of the Board's decision.

No Registrant whose registration is revoked by the Board shall be allowed in the future to be registered again in the City of Arlington under this article.

H. **Suspension or Revocation Hearing**. In considering charges under this article regarding suspension or revocation of a registration, the Building Code Board of Appeals shall proceed upon sworn information furnished it by any person. Such information shall be in writing and shall be duly verified by the person familiar with the allegations made. The Board shall make an order setting the matter for hearing at a specified time and place, and the Secretary of the Board shall cause a copy of the Board's order and of the sworn information to be served upon the Registrant by registered mail at least fifteen (15) days before the date set for the hearing. The Registrant may appear in person or by counsel at the time and place named in the order and present a defense to the Board. The City Attorney for the City of Arlington shall provide counsel for the Board. If the Registrant fails or refuses to appear, the Board may proceed to hear and determine the charge in the registrant's absence. If the registrant pleads guilty or if, upon a hearing, the Board finds any of the charges to be true, it may enter an order suspending or revoking the certificate of registration. Failure to properly perfect an appeal in a court of competent jurisdiction within ten (10) days of receipt of the Board's decision shall render the Board's decision final. Suspension or revocation of a registration resulting from a decision of the Board shall preclude the Registrant from securing a permit for work controlled by that registration in the City of Arlington or from becoming so registered under any different identification as long as the suspension or revocation is in effect.

I. **Exemption for Owner**. Except for permits required by Article VIII below, no such registration procedure shall be required for minor alteration or repair work to be performed on an existing structure when the person performing the alteration or repair work is the owner of the structure, and is not assisted by any other person for remuneration. A homeowner may construct an addition to a residential structure of legal residence. Minor accessory structures such as storage buildings (not exceeding 300 square feet in area) and fences may be constructed by the owner of a property without registration. The Owner shall be

automatically termed a Registrant for the purposes of such a project without registration. Notwithstanding such relief from registration, all requirements for permits for the work and all other applicable provisions of this Building Code shall remain in force.

Further, Article IV is hereby amended by the amendment of **Section 4.02**, Permits Required, so that hereafter said section shall be and read as follows:

Section 4.02 Permits Required

It shall be unlawful for any Registrant to erect, construct, enlarge, alter, repair, move, improve, remove, convert or demolish any building, sign or structure in the City of Arlington, or do the same to the pavement of properties other than R-3 occupancies, or cause the same to be done, without first obtaining a separate building permit for such work from the Building Official.

A permit shall be issued only to a Registrant meeting the conditions of Section 4.01 above, and only after all other requirements defined in this article have been accomplished.

Further, Article IV is hereby amended by the amendment of **Section 4.03**, Application for Permit, Subsection (F), so that hereafter said subsection shall be and read as follows:

F. Be signed by the applicant (Registrant) or an authorized agent, who may be required to submit evidence to indicate such authority;

Further, Article IV is hereby amended by the amendment of **Section 4.04**, Plans and Specifications, so that hereafter said section shall be and read as follows:

Section 4.04 Plans and Specifications

A. With each application for a building permit and when required by the Building Official for enforcement of any provisions of this Building Code, two (2) or more sets of plans and specifications shall be submitted. The Building Official may require plans, computations and specifications to be prepared and designed by an engineer or architect licensed by the State of Texas to

practice as such even if not required by State law. The engineers' or architects' professional seal shall be affixed to the documents.

EXCEPTION: Except when specifically required by the Building Official, plans, computations and specifications need not be submitted for the following:

(1) One (1) story buildings of Type V conventional wood frame construction, with an area not exceeding six hundred (600) square feet;

(2) Groups R-3 and U Occupancies of Type V conventional wood frame construction; or

(3) The Building Official may waive the submission of plans, calculations, construction, inspection requirements and other data if it is found that the nature of the work applied for is such that reviewing of plans is not necessary to obtain compliance with the Code.

B. Plans and specifications shall be drawn to scale upon substantial paper or cloth and shall be of sufficient clarity to indicate the nature and extent of the work proposed and show in detail that it will conform to the provisions of this Building Code and all other relevant laws, ordinances, rules and regulations. The first sheet of each set of plans shall give the building and street address where the work is to be performed and the name and address of the owner and person who prepared said plans. Plans shall include a plot plan showing the location of the proposed building and of every existing building on the property. In lieu of detailed specifications, the Building Official may approve references on the plans to a specific section or part of this Building Code or other ordinances or laws.

C. Computations, stress diagrams and other data sufficient to show the correctness of the plans shall be submitted when required by the Building Official. Plans by the applicant for buildings more than two (2) stories in height of other than Group R-3 and U Occupancies shall indicate how required structural and fire-restrictive integrity will be maintained where a penetration will be made for electrical, mechanical, plumbing and communications conduits and pipes, and similar systems.

Further, Article IV is hereby amended by the amendment of **Section 4.05**, Building Permits Issued, Subsection (A), so that hereafter said subsection shall be and read as follows:

Section 4.05 Building Permits Issued

A. The application, plans and specifications filed by an applicant for a permit shall be reviewed by the Building Official. Such plans may also be reviewed by other departments of the City of Arlington to check compliance with the laws and ordinances under their jurisdiction, including but not limited to review by the Engineering Services, Utilities, Fire, Health, City Arborist and the Transportation Department of the City of Arlington to ensure compliance with the Traffic Study Provisions adopted by resolution of the City Council of said City. If the Building Official finds that the work described in an application for permit and the plans filed therewith conform to the requirements of this Building Code and other pertinent laws and that the permit fee has been paid, a permit shall be issued, however, except by specific approval by the Building Official or his authorized representative, a permit shall not be issued in a development where the construction of streets, drainage, water, sewer and other such facilities have not been completed and accepted by the City of Arlington.

Further, Article IV is hereby amended by the amendment of **Section 4.05**, Building Permits Issued, Subsection (C), so that hereafter said subsection shall be and read as follows:

C. The Building Official may issue a permit for the construction of part of a building or structure before the entire plans and specifications for the whole building or structure have been submitted or approved, provided adequate information and detailed statements have been filed complying with all pertinent requirements of this Building Code. The holder of such permit shall proceed at personal risk without assurance that the permit for the entire building or structure will be granted.

Further, Article IV is hereby amended by the amendment of **Section 4.07**, Expiration of Permit, so that hereafter said section shall be and read as follows:

Section 4.07 **Expiration of Permit**

Every permit issued by the Building Official under the provisions of this Building Code shall expire by limitation of time and become null and void if the building or work authorized by such permit is not commenced within one hundred twenty (120) days from the date of such permit, or if the building or work authorized by such permit is suspended or abandoned for a period of one hundred twenty (120) days at any time after the work is commenced. Before such work can be recommenced, a new permit shall be first obtained.

Any permittee holding an unexpired permit may apply for an extension of the time within which work may commence under that permit when the permittee is unable to commence work within the time required for good and satisfactory reasons. The Building Official may extend the time for action by the permittee for a period not exceeding one hundred eighty (180) days. No permit shall be extended more than once.

Further, Article IV is hereby amended by the amendment of **Section 4.12**, Refunds, so that hereafter said section shall be and read as follows:

Section 4.12 **Refunds**

There shall be no refund of any building permit fee except for the following:

A. Expired applications as provided in Section 4.11 above, except that the plan review fee and applicable service charges shall not be refunded;

B. When a permit has been issued and no part of the work has commenced, a refund may be authorized. The refund shall be reduced by the amount of the plan review fee and any applicable service charges;

C. When the permit has been issued through an error on the part of the City of Arlington and it is found that the work applied for cannot be allowed, the refund shall be made in full;

D. Service charges for refunds shall not exceed the original permit fees; and

E. When a permit has been issued, the Building Official may prorate the amount of the building permit fee to be refunded based on the Building Official's determination of the percentage of work completed.

Further, Article IV is hereby amended by the amendment of **Section 4.13(C)**, Required Inspections, so that hereafter said subsection shall be and read as follows:

C. **Required Inspections**. Reinforcing steel or the structural framework of any part of any building or structure shall not be covered or concealed without the permittee first obtaining the approval of the Building Official following an inspection.

The Building Official, upon notification from the permit holder or an authorized agent, shall make the following inspections and shall either approve that portion of the construction as completed or shall notify the permit holder or an authorized agent in what respects the same fails to comply with this Building Code:

1. A foundation inspection shall be required after trenches are excavated and forms erected, and when all materials for the foundation are delivered on the job. Where concrete from a central mixing plant (commonly termed "transit mixed") is to be used, materials need not be on the job;

2. A framing inspection shall be required after the roof, all framing, fire-blocking and bracing are in place and all pipes, ducts, chimneys and vents are complete and the electrical rough is approved; and

3. A final inspection shall be required after the building is completed and ready for occupancy and before such occupancy begins.

   In the event a court of competent jurisdiction determines that lawfully filed deed restrictions or lawfully filed real property restrictive covenants on single family residential property within the City of Arlington would be violated by the construction that is the subject of the final inspection, such court may restrain or enjoin the

Building Official from completing a final inspection for a period not to exceed sixty (60) days.

Further, Article IV is hereby amended by the amendment of **Section 4.13(D)**, Other Inspections, so that hereafter said subsection shall be and read as follows:

D. **Other Inspections**. In addition to the required inspections specified in Subsection (C) above, the Building Official may make or require any other inspections of any construction work to ascertain compliance with the provisions of this Building Code and other applicable laws which are enforced by the City of Arlington.

For the purpose of determining compliance with U.B.C., Section 3402, the Building Official may cause any structure to be reinspected.

Further, Article IV is hereby amended by the deletion of Section 4.14, Special Inspections, and the renumbering and amendment of Section 4.15, Certificate of Occupancy, so that hereafter **Section 4.15** shall be and read as follows:

Section 4.14 Certificate of Occupancy

A. Use of Occupancy. No premises, building or structure, except Group R, Division III and Group U shall be used or occupied until a Certificate of Occupancy has been issued as provided herein. A change in ownership or name change shall require the issuance of a new Certificate of Occupancy.

B. Change in Use. Changes in the character of occupancy or use of a building shall not be made, except as specified in U.B.C., Section 3405.

C. Certificate Issued. The Building Official shall issue a Certificate of Occupancy upon a finding that the premises complies with the Building Code and provisions of the "Zoning" Chapter of the Code of the City of Arlington. For new structures or when the occupant is of a different character of occupancy or use from the previous certificate holder, an inspection shall be made by the Building Inspections Division. Where no change in character of occupancy is proposed for a structure previously granted a Certificate of

Occupancy, no inspection is necessary unless specifically required by the Building Official. In the event that a tenant space is being altered, enlarged or reduced in size, or if the Building Official believes that the previous tenant altered the space without benefit of permits, an inspection may be required prior to the occupancy. Other City departments may require inspections prior to the granting of a Certificate of Occupancy.

The Certificate of Occupancy shall contain:

1. The address of the building;

2. The name, address and telephone number of the occupant of said premises, building or structure;

3. The allowable use for which the certificate is issued;

4. The zoning district in which the use is located; and

5. Any conditions of the granting of the certificate.

D. Temporary Certificate. A temporary Certificate of Occupancy may be issued by the Building Official for the use of a portion or portions of a building or structure prior to the completion of the entire building or structure.

E. Posting. The Certificate of Occupancy shall be posted in a conspicuous place on the premises and shall not be removed without permission of the Building Official.

F. Revocation. The Building Official may, in writing, suspend or revoke a Certificate of Occupancy issued under the provisions of this Code whenever the certificate is issued in error, or on the basis of incorrect information supplied, or when it is determined that the building or structure or portion thereof is in violation of any ordinance or regulation or any provision of this Code.

Further, Article IV is hereby amended by the renumbering of Section 4.16, Indemnification, to **Section 4.15**, Indemnification.

Further, Article VII is hereby amended by the amendment of **Section 7.02**, Identification of Signs, so that hereafter said section shall be and read as follows:

Section 7.02 Identification of Signs

Every sign hereafter erected, constructed or maintained for which a permit is required shall be plainly marked with the name of the person, firm or corporation erecting and maintaining such sign.

Further, Article VII is hereby amended by the amendment of **Section 7.04**, Maintenance, so that hereafter said section shall be and read as follows:

Section 7.04 Maintenance

All signs for which a permit is required, together with all their supports, braces, guys and anchors, shall be kept in good repair. The Building Official may order the removal of any sign that is not maintained in accordance with the provisions of this Section. Such removal shall be accomplished at the expense of the owner or lessee.

Further, Article VII is hereby amended by the amendment of the **first paragraph** of **Section 7.06**, Location Restrictions, so that hereafter said paragraph shall be and read as follows:

Except where authorized elsewhere in the City Code, no sign shall be erected, constructed or maintained:

Further, Article VII is hereby amended by the amendment of **Section 7.07(B)**, Wind Pressure, so that hereafter said subsection shall be and read as follows:

B. Wind Pressure. In the design and erection of all signs, the effect of wind shall be carefully considered. All signs shall be so constructed as to withstand wind pressure as specified in U.B.C., Section 1613.

Further, Article VII is hereby amended by the amendment of **Section 7.07(C)**, Working Stresses, so that hereafter said subsection shall be and read as follows:

C. Working Stresses.

(1) In any sign construction, the allowable working stresses shall conform with the requirements of U.B.C., Section 1613.

(2) The allowable working stresses for steel and wood shall be calculated in accordance with the provisions of U.B.C., Sections 2203 and 2304.1 - 2304.3, respectively.

(3) The working strength of chains, cables, guys or steel rods shall not exceed one-fifth (1/5) of the ultimate strength of such chains, cables, guys or steel rods.

Further, Article VII is hereby amended by the amendment of **Section 7.08**, Use of Plastic Materials, so that hereafter said section shall be and read as follows:

Section 7.08 Use of Plastic Materials

Other provisions of this Building Code notwithstanding, plastic materials in accordance with U.B.C. Standards 26-6 and 26-7 shall be deemed approved plastics and may be used as the display surface material and for the letters, decorations and facings on signs and their structures.

Further, Article IX is hereby amended by the amendment of **Section 9.01**, Barbed Wire Fence, so that hereafter said section shall be and read as follows:

Section 9.01 Barbed Wire Fence

It shall be unlawful for any person, firm, corporation or agent or employee thereof to build, erect, keep, maintain, permit or allow to be built, erected, kept or maintained, any barbed or razor wire fence on or around any property or premises owned or controlled by such person, firm or corporation within the corporate limits of the City of Arlington: provided, however, that any fence, including topgrade construction barbed or razor wire, the lowest

strand of which is not less than six and one-half feet (6½') above the ground level, shall be permitted.

Further, Article IX is hereby amended by the amendment of **Section 9.02**, Enclosure of Swimming Pools, Spas and Hot Tubs, so that hereafter said section shall be and read as follows:

Section 9.02 Enclosure of Swimming Pools, Spas and Hot Tubs

A. The following are required to comply with the most current edition of the Pool Yard Enclosure Requirements, Texas Health and Safety Code:

1. A pool owned, controlled, or maintained by the owner of a multi-unit rental complex or by a property owners association; and

2. Doors and windows of rental dwellings opening into the pool of a multi-unit rental complex or condominium, cooperative, or a townhome project.

B. Construction Requirements For Existing Swimming Pools

1. Every outdoor swimming pool, spa and hot tub shall be completely enclosed by a fence or wall at least forty-eight inches (48") above grade measured on the side of the fence or wall which faces away from the swimming pool.

2. Every fence or wall required by this Section shall be constructed so that it contains no openings, holes or gaps, except doors or gates, which will allow the passage of a sphere four inches (4") in diameter.

3. Every door or gate that forms a part of a fence or wall required by this Section shall be constructed so that it contains no openings, holes or gaps which will allow the passage of a sphere four inches (4") in diameter.

4. A building may be used as part of a fence or wall required by this Section. No **door** of such building shall open directly into the enclosed area except as herein provided.

5. It is an exception to Subsection (A)(4) that the door:

   a. Provides the only access into a nonhabitable storage or equipment room or building; or

   b. Is to a single-family dwelling and is in compliance with Subsection (B).

C. Self-closing and Self-latching Devices on Existing Swimming Pools

1. All gates or doors opening into the enclosed area shall be equipped with a self-closing and self-latching device for keeping the gate or door securely closed at all times when not in actual use.

2. The application of this subsection shall not include sliding glass doors.

3. It is an exception to this subsection that the door or gate provides the only access into a nonhabitable storage or equipment room or building.

D. Application of Requirements

1. The requirements of Subsections (B) or (C) shall be applicable to all outdoor swimming pools, spas and hot tubs constructed or installed prior to the adoption of the 1991 U.B.C. in Article I of this Chapter and which have a depth capacity of eighteen inches (18") or more of fluid at any point, whether actually containing a fluid or empty.

2. Outdoor swimming pools, spas and hot tubs, whose construction or installation was completed prior to May 1, 1990, and which are located at occupancies other than hotels, motels, lodges and apartment houses, shall not be subject to the provisions of this ordinance requiring doors to a building that forms part of an enclosure to be equipped with self-closing and self-latching devices.

E. Modifications

The Building Code Board of Appeals may make modifications in individual cases, upon a showing of

good cause, with respect to the height, nature of location of the fence, wall, gates or latches, or the necessity therefor, provided the protection as sought hereunder or by Appendix B, Chapter 4, Division I, is not reduced thereby. Said Board may permit other protection devices or structures to be used so long as the degree of protection afforded by the substitute devices or structures is not less than the protection afforded by the substitute fence, gates and latch described herein, or in Appendix D, Chapter 4, Division I, as applicable.

F. Definition

The terms "swimming pool", "spa" and "hot tub" as used herein, shall mean an artificial or semi-artificial receptacle or container designed to contain fluid, whether actually containing a fluid or not, which is either temporarily or permanently located outdoors, and is used or intended to be used for public, semi-public or private human use involving submersion of all or part of the body, whether or not a fee is paid for such use. Such use may include, but is not limited to, swimming, wading, soaking, floating or recreational bathing by any number of persons. These terms do not apply to a receptacle or container that is located outdoors and is not used or intended to be used for public, semi-public or private human use involving submersion of all or part of the body, such as fountains and reflections pools.

G. Offense

1. It is an offense if a person owns, occupies, maintains or is in charge of premises that are in violation of this Section.

2. There shall be no requirement of a culpable mental state for a violation of this Section or Appendix B, Chapter 4, Division I.

Further, Article XII is hereby amended by the amendment of **Section 12.01**, Sanitary Sewer Connection During Construction, so that hereafter said section shall be and read as follows:

Section 12.01 **Sanitary Sewer Connection During Construction**

Adequate sanitary facilities for the convenience of all construction personnel shall be provided by the contractor during any construction performed in the City of Arlington. These facilities shall be kept in a clean and sanitary condition throughout the duration of the work. The temporary sanitary facilities shall be enclosed, screened, weatherproofed and connected to a sewer. Upon removal of the temporary facilities, the sewer connection shall be removed and suitably capped.

Further, Article XIII is hereby amended by the amendment of **Section 13.02**, Prohibited Acts, Subsection (C), so that hereafter said subsection shall be and read as follows:

C. No person may direct, control or participate in the production of an outdoor festival in violation of the terms and conditions of a valid permit issued in accordance with this Article.

Further, Article XIII is hereby amended by the amendment of the **first paragraph** of **Section 13.03**, Application for Permit, Subsection (C), so that hereafter said paragraph shall be and read as follows:

C. The Building Official may require submittal of the following:

Further, Article XIII is hereby amended by the addition of an Exception to **Section 13.03**, Application for Permit, Subsection (C), so that hereafter said Exception shall be and read as follows:

EXCEPTION: Events which have an expected attendance of fewer than 1,000 persons and which are to take place at a location for which a Certificate of Occupancy has been granted for entertainment uses shall not be required to submit 1, 2, 4, 7, 8, 9 and 10 above.

Further, Article XIII is hereby amended by the amendment of **Section 13.08**, Permit Denial or Revocation Hearing, Subsection (D), so that hereafter said subsection shall be and read as follows:

D. An appeal of the Building Official's decision in Subsection (C) above may be made in writing to the City Manager or a designee (Appeal Officer) within five (5) working days of the date of said decision. A hearing shall be set within five (5) working days of receipt of the request for appeal and notice shall be immediately given to all affected parties.

Further, Article XIV is hereby amended by the amendment of **Section 14.01**, Application and Permit Requirements, Subsection (B)(2), so that hereafter said subsection shall be and read as follows:

(2) The signatures of the Building Official or an authorized representative and an authorized employee of the Transportation Department of the City of Arlington;

Further, Article XVI is hereby amended by the amendment of **Section 16.02**, Scope, so that hereafter said section shall be and read as follows:

Section 16.02 Scope

All buildings or structures in the Group R, Division 1, Apartment House Occupancy Group shall comply with the following:

1. Roof coverings shall comply with U.B.C., Table 15-A (previously U.B.C., Section 3202b in the 1985 version of said Code);

2. Wood shingles or shakes used as an exterior wall covering shall comply with U.B.C., Section 2320.4 (previously U.B.C. Section 2516G(4) in the 1985 version of said Code); and

3. Attic draft stops shall comply with U.B.C., Section 708 (previously U.B.C. Section 2516(f) in the 1985 version of said Code).

Further, Article XVII is hereby amended by the amendment of the **first paragraph** of **Section 17.02**, Dangerous Building Defined, so that hereafter said paragraph shall be and read as follows:

Section 302 of the 1994 edition of the Uniform Code for the Abatement of Dangerous Buildings, as published by the International Conference of Building Officials, is hereby adopted but modified and amended by the following, so that Section 302, entitled "Dangerous Buildings," shall read as follows:

Further, Article XVII is hereby amended by the amendment of **Section 17.02**, Dangerous Building Defined, Subsection (O), so that hereafter said subsection shall be and read as follows:

O. If the building is used or intended to be used for dwelling purposes, and because of inadequate maintenance, dilapidation, decay, damage, faulty construction or arrangement, inadequate light, air or sanitation facilities, or otherwise, is determined by the Building Official or an authorized representative to be unsanitary, unfit for human habitation or in such a condition that is likely to cause sickness or disease;

Further, Article XVII is hereby amended by the amendment of **Section 17.02**, Dangerous Building Defined, Subsection (P), so that hereafter said subsection shall be and read as follows:

P. If the building, because of obsolescence, dilapidated condition, deterioration, damage, inadequate exits, lack of sufficient fire-resistive construction, faulty electric wiring, gas connections or heating apparatus, or other cause, is determined by the Building Official or an authorized representative to be a fire hazard;

Further, Article XVIII is hereby amended by the repeal of the existing Article XVIII and the adoption of a new Article XVIII, so that hereafter said Article shall be and read as follows:

ARTICLE XVIII

ACCESSIBILITY

Section 18.01 Accessibility

A. Buildings regulated under State Law and built in accordance with State certified plans, including any

variances or waivers granted by the State, shall be deemed to be in compliance with the requirements of this Article.

B. The Building Official may accept alternate methods of achieving accessibility than those required by this Article. If special or unusual conditions exist that make compliance to specific requirements of this Article impractical, the Building Code Board of Appeals may make exceptions to the accessibility requirements in this Article.

2.

Any person, firm, corporation, agent or employee thereof who violates any of the provisions of this ordinance shall be guilty of a misdemeanor and upon conviction thereof shall be fined an amount not to exceed **Two Thousand and No/100 Dollars ($2,000)** for each offense. Each day that a violation is permitted to exist shall constitute a separate offense.

3.

This ordinance shall be and is hereby declared to be cumulative of all other ordinances of the City of Arlington, and this ordinance shall not operate to repeal or affect any of such other ordinances except insofar as the provisions thereof might be inconsistent or in conflict with the provisions of this ordinance, in which event such conflicting provisions, if any, in such other ordinance or ordinances are hereby repealed.

4.

If any section, subsection, sentence, clause or phrase of this ordinance is for any reason held to be unconstitutional, such holding shall not affect the validity of the remaining portions of this ordinance.

5.

All of the regulations provided in this ordinance are hereby declared to be governmental and for the health, safety and welfare of the general public. Any member of the City Council or any City official or employee charged with the enforcement of this ordinance, acting for the City of Arlington in the discharge of his/her duties, shall not thereby render himself/herself personally liable; and he/she is hereby relieved from all personal liability for any damage that might accrue to persons or property as a result

of any act required or permitted in the discharge of his/her said duties.

6.

Any violation of this ordinance can be enjoined by a suit filed in the name of the City of Arlington in a court of competent jurisdiction, and this remedy shall be in addition to any penal provision in this ordinance or in the Code of the City of Arlington.

7.

The caption and penalty clause of this ordinance shall be published in a newspaper of general circulation in the City of Arlington, in compliance with the provisions of Article VII, Section 15, of the City Charter. Further, this ordinance may be published in pamphlet form and shall be admissible in such form in any court, as provided by law.

8.

This ordinance shall become effective ten (10) days after first publication as described above.

PRESENTED AND GIVEN FIRST READING on the 25th day of June, **1996**, at a regular meeting of the City Council of the City of Arlington, Texas; and GIVEN SECOND READING, passed and approved on the 2nd day of July, **1996**, by a vote of 7 ayes and 0 nays at a regular meeting of the City Council of the City of **Arlington, Texas**.

_____
RICHARD E. GREENE, Mayor

ATTEST:

_____
CINDY KEMP, City Secretary

APPROVED AS TO FORM:
JAY DOEGEY, City Attorney

BY_____

ORDINANCE NO. 96-145

AN ORDINANCE AMENDING THE **"CONSTRUCTION"** CHAPTER OF THE CODE OF THE CITY OF ARLINGTON, TEXAS, 1987, THROUGH THE AMENDMENT OF ARTICLE I, ENTITLED BUILDING CODE, BY THE AMENDMENT OF **SECTION 1.04**, AMENDMENTS, ADDITIONS AND DELETIONS, SUBSECTION (C), RELATIVE TO FIRE RESTRICTIVE CONSTRUCTION AND RELATIVE TO SAFETY GLAZING OF GLASS AND RENUMBERING THE REMAINING SUBSECTIONS; PROVIDING FOR A FINE OF UP TO **$2,000** FOR EACH OFFENSE IN VIOLATION OF THE ORDINANCE; PROVIDING THIS ORDINANCE BE CUMULATIVE; PROVIDING FOR SEVERABILITY; PROVIDING FOR GOVERNMENTAL IMMUNITY; PROVIDING FOR INJUNCTIONS; PROVIDING FOR PUBLICATION AND BECOMING EFFECTIVE TEN DAYS AFTER FIRST PUBLICATION

BE IT ORDAINED BY THE CITY COUNCIL OF THE CITY OF ARLINGTON, TEXAS:

1.

That the **"Construction"** Chapter of the Code of the City of Arlington, Texas, 1987, is hereby amended through the amendment of Article I, Building Code, by the amendment of **Section 1.04**, Amendments, Additions and Deletions, by the addition of a new Subsection (C)(16) and the renumbering of the remainder of Subsection (C), so that hereafter said Subsection (C)(16) shall be and read as follows:

(16) The amendment of Section 1017.5, entitled Corridors and Exterior Exit Balconies, by the addition of the following exception:

Corridor walls and ceilings need not be of fire-resistive construction when the building is equipped with an automatic sprinkler system throughout.

Further, Article I is hereby amended through the amendment of **Section 1.04**, Amendments, Additions and Deletions, by the addition of a new Subsection (C)(25) and the renumbering of the remainder of Subsection (C), so that

hereafter said Subsection (C)(25) shall be and read as follows:

(25) The amendment of Section 2406.4, entitled Hazardous Locations, Item 9.2, to read as follows:

The glazing is within five feet of a swimming pool or spa water's edge.

2.

Any person, firm, corporation, agent or employee thereof who violates any of the provisions of this ordinance shall be guilty of a misdemeanor and upon conviction thereof shall be fined an amount not to exceed **Two Thousand and No/100 Dollars ($2,000)** for each offense. Each day that a violation is permitted to exist shall constitute a separate offense.

3.

This ordinance shall be and is hereby declared to be cumulative of all other ordinances of the City of Arlington, and this ordinance shall not operate to repeal or affect any of such other ordinances except insofar as the provisions thereof might be inconsistent or in conflict with the provisions of this ordinance, in which event such conflicting provisions, if any, in such other ordinance or ordinances are hereby repealed.

4.

If any section, subsection, sentence, clause or phrase of this ordinance is for any reason held to be unconstitutional, such holding shall not affect the validity of the remaining portions of this ordinance.

5.

All of the regulations provided in this ordinance are hereby declared to be governmental and for the health, safety and welfare of the general public. Any member of the City Council or any City official or employee charged with the enforcement of this ordinance, acting for the City of Arlington in the discharge of his/her duties, shall not thereby render himself/herself personally liable; and he/she is hereby relieved from all personal liability for any damage that might accrue to persons or property as a result of any act required or permitted in the discharge of his/her said duties.

6.

Any violation of this ordinance can be enjoined by a suit filed in the name of the City of Arlington in a court of competent jurisdiction, and this remedy shall be in addition to any penal provision in this ordinance or in the Code of the City of Arlington.

7.

The caption and penalty clause of this ordinance shall be published in a newspaper of general circulation in the City of Arlington, in compliance with the provisions of Article VII, Section 15, of the City Charter. Further, this ordinance may be published in pamphlet form and shall be admissible in such form in any court, as provided by law.

8.

This ordinance shall become effective ten (10) days after first publication as described above.

PRESENTED AND GIVEN FIRST READING on the 29th day of October, **1996**, at a regular meeting of the City Council of the City of Arlington, Texas; and GIVEN SECOND READING, passed and approved on the 5th day of November, **1996**, by a vote of 9 ayes and 0 nays at a regular meeting of the City Council of the City of **Arlington, Texas**.

_____
RICHARD E. GREENE, Mayor

ATTEST:

_____
CINDY KEMP, City Secretary

APPROVED AS TO FORM:
JAY DOEGEY, City Attorney

BY_____

ORDINANCE NO. 97-90

AN ORDINANCE AMENDING THE **"CONSTRUCTION"** CHAPTER OF THE CODE OF THE CITY OF ARLINGTON, TEXAS, 1987, THROUGH THE AMENDMENT OF **ARTICLE I**, ENTITLED BUILDING CODE, BY THE AMENDMENT OF **SECTION 1.05**, ADOPTION OF APPENDICES, RELATIVE TO THE DELETION OF APPENDIX C; THROUGH THE AMENDMENT OF **ARTICLE III**, ENTITLED MOVED BUILDINGS, BY THE AMENDMENT OF **SECTION 3.02**, APPLICATION FOR REGISTRATION AND PERMITS, AT **SUBSECTION (A)**, REGISTRATION INFORMATION REQUIRED, RELATIVE TO THE DELETION OF REGISTRATION INFORMATION THAT IS IN ADDITION TO THE REQUIREMENTS AS DESCRIBED IN ARTICLE IV; BY THE DELETION OF **SECTION 3.05**, NOTICES TO BE GIVEN, RELATIVE TO THE REQUIREMENT OF A WRITTEN NOTICE AND RENUMBERING THE REMAINING SECTIONS; THROUGH THE AMENDMENT OF **ARTICLE XIV**, ENTITLED OVERSIZE AND OVERWEIGHT VEHICLE PERMITS, BY THE DELETION OF **SECTION 14.02**, BOND REQUIREMENT, RELATIVE TO BOND REQUIREMENTS; BY THE DELETION OF **APPENDIX "C"**; PROVIDING FOR A FINE OF UP TO **$2,000** FOR EACH OFFENSE IN VIOLATION OF THE ORDINANCE; PROVIDING THIS ORDINANCE BE CUMULATIVE; PROVIDING FOR SEVERABILITY; PROVIDING FOR GOVERNMENTAL IMMUNITY; PROVIDING FOR INJUNCTIONS; PROVIDING FOR PUBLICATION AND BECOMING EFFECTIVE TEN DAYS AFTER FIRST PUBLICATION

BE IT ORDAINED BY THE CITY COUNCIL OF THE CITY OF ARLINGTON, TEXAS:

1.

That the **"Construction"** Chapter of the Code of the City of Arlington, Texas, 1987, is hereby amended through the amendment of Article I, Building Code, by the amendment of **Section 1.05**, Adoption of Appendices, so that hereafter said section shall be and read as follows:

Section 1.05 **Adoption of Appendices**

The following referenced provisions of the U.B.C. annexed hereto as appendices, the same being either attached hereto or incorporated herein by reference, are made a part of this Building Code.

Appendix A. The entire provisions, except Chapter 9, of the Uniform Building Code Standards, Volume 3, 1994 Edition, as promulgated by the International Conference of Building Officials.

Appendix B. Only Chapter 4, Division II, entitled Aviation Control Towers, Chapter 3, Division I, entitled Detention and Correctional Facilities, Chapter 3, Division II, entitled Agricultural Buildings, Chapter 4, Division I, entitled Barriers for Swimming Pools, Spas and Hot Tubs, Chapter 15, entitled Reroofing, Chapter 31, Division III, entitled Patio Covers, and Chapter 31, Division II, entitled Membrane Structures, of the Appendix to the Uniform Building Code, 1994 Edition.

All other Chapters of said Appendix to the U.B.C. are hereby omitted from this Building Code.

Further, Article III, Moved Buildings, is hereby amended by the amendment of **Section 3.02**, Application for Registration and Permits, Subsection (A), Registration Information Required, so that hereafter said subsection shall be and read as follows:

A. Registration Information Required. An applicant for registration under this Article shall comply with requirements for registration as described in Article IV.

Further, Article III is hereby amended through the **deletion** of **Section 3.05**, Notices to be Given, and **renumbering** the remaining sections.

Further, Article XIV is hereby amended by the **deletion** of **Section 14.02**, Bond Requirement.

Further, the **"Construction"** Chapter of the Code of the City of Arlington, Texas, 1987, is hereby amended through the **deletion** of **Appendix "C"**.

2.

Any person, firm, corporation, agent or employee thereof who violates any of the provisions of this ordinance shall be guilty of a misdemeanor and upon conviction thereof shall be fined an amount not to exceed **Two Thousand and No/100 Dollars ($2,000)** for each offense. Each day that a violation is permitted to exist shall constitute a separate offense.

3.

This ordinance shall be and is hereby declared to be cumulative of all other ordinances of the City of Arlington, and this ordinance shall not operate to repeal or affect any of such other ordinances except insofar as the provisions thereof might be inconsistent or in conflict with the provisions of this ordinance, in which event such conflicting provisions, if any, in such other ordinance or ordinances are hereby repealed.

4.

If any section, subsection, sentence, clause or phrase of this ordinance is for any reason held to be unconstitutional, such holding shall not affect the validity of the remaining portions of this ordinance.

5.

All of the regulations provided in this ordinance are hereby declared to be governmental and for the health, safety and welfare of the general public. Any member of the City Council or any City official or employee charged with the enforcement of this ordinance, acting for the City of Arlington in the discharge of his/her duties, shall not thereby render himself/herself personally liable; and he/she is hereby relieved from all personal liability for any damage that might accrue to persons or property as a result of any act required or permitted in the discharge of his/her said duties.

6.

Any violation of this ordinance can be enjoined by a suit filed in the name of the City of Arlington in a court of competent jurisdiction, and this remedy shall be in

addition to any penal provision in this ordinance or in the Code of the City of Arlington.

7.

The caption and penalty clause of this ordinance shall be published in a newspaper of general circulation in the City of Arlington, in compliance with the provisions of Article VII, Section 15, of the City Charter. Further, this ordinance may be published in pamphlet form and shall be admissible in such form in any court, as provided by law.

8.

This ordinance shall become effective ten (10) days after first publication as described above.

PRESENTED AND GIVEN FIRST READING on the 24th day of June, **1997**, at a regular meeting of the City Council of the City of Arlington, Texas; and GIVEN SECOND READING, passed and approved on the 1st day of July, **1997**, by a vote of 8 ayes and 0 City of **Arlington, Texas**.

_____
ELZIE ODOM, Mayor

ATTEST:

_____
CINDY KEMP, City Secretary

APPROVED AS TO FORM:
JAY DOEGEY, City Attorney

BY_____

ORDINANCE NO. 97-107

AN ORDINANCE AMENDING THE **"CONSTRUCTION"** CHAPTER OF THE CODE OF THE CITY OF ARLINGTON, TEXAS, 1987, THROUGH THE AMENDMENT OF **ARTICLE I**, ENTITLED BUILDING CODE, BY THE AMENDMENT OF **SECTION 1.04**, AMENDMENTS, ADDITIONS AND DELETIONS, SUBSECTION (C), RELATIVE TO OUTDOOR SWIMMING POOL BARRIERS AND RENUMBERING THE REMAINING SUBSECTIONS; PROVIDING FOR A FINE OF UP TO **$2,000** FOR EACH OFFENSE IN VIOLATION OF THE ORDINANCE; PROVIDING THIS ORDINANCE BE CUMULATIVE; PROVIDING FOR SEVERABILITY; PROVIDING FOR GOVERNMENTAL IMMUNITY; PROVIDING FOR INJUNCTIONS; PROVIDING FOR PUBLICATION AND BECOMING EFFECTIVE TEN DAYS AFTER FIRST PUBLICATION

BE IT ORDAINED BY THE CITY COUNCIL OF THE CITY OF ARLINGTON, TEXAS:

1.

That the **"Construction"** Chapter of the Code of the City of Arlington, Texas, 1987, is hereby amended through the amendment of Article I, Building Code, by the amendment of **Section 1.04**, Amendments, Additions and Deletions, by the addition of a new Subsection (C)(30) and the renumbering of the remainder of Subsection (C), so that hereafter said Subsection (C)(30) shall be and read as follows:

(30) The amendment of Appendix B, Chapter 4, Division I, Section 421.1, entitled Outdoor Swimming Pool, by the addition of an exception to number 1 to read as follows: "Exception: Horizontal member requirements shall not apply to barriers which are 72 inches or greater in height."

2.

Any person, firm, corporation, agent or employee thereof who violates any of the provisions of this ordinance shall be guilty of a misdemeanor and upon conviction thereof shall be fined an amount not to exceed **Two Thousand and No/100 Dollars ($2,000)** for each offense. Each day that a

violation is permitted to exist shall constitute a separate offense.

3.

This ordinance shall be and is hereby declared to be cumulative of all other ordinances of the City of Arlington, and this ordinance shall not operate to repeal or affect any of such other ordinances except insofar as the provisions thereof might be inconsistent or in conflict with the provisions of this ordinance, in which event such conflicting provisions, if any, in such other ordinance or ordinances are hereby repealed.

4.

If any section, subsection, sentence, clause or phrase of this ordinance is for any reason held to be unconstitutional, such holding shall not affect the validity of the remaining portions of this ordinance.

5.

All of the regulations provided in this ordinance are hereby declared to be governmental and for the health, safety and welfare of the general public. Any member of the City Council or any City official or employee charged with the enforcement of this ordinance, acting for the City of Arlington in the discharge of his/her duties, shall not thereby render himself/herself personally liable; and he/she is hereby relieved from all personal liability for any damage that might accrue to persons or property as a result of any act required or permitted in the discharge of his/her said duties.

6.

Any violation of this ordinance can be enjoined by a suit filed in the name of the City of Arlington in a court of competent jurisdiction, and this remedy shall be in addition to any penal provision in this ordinance or in the Code of the City of Arlington.

7.

The caption and penalty clause of this ordinance shall be published in a newspaper of general circulation in the City of Arlington, in compliance with the provisions of Article VII, Section 15, of the City Charter. Further, this ordinance may be published in pamphlet form and shall be admissible in such form in any court, as provided by law.

8.

This ordinance shall become effective ten (10) days after first publication as described above.

PRESENTED AND GIVEN FIRST READING on the 22nd day of July, **1997**, at a regular meeting of the City Council of the City of Arlington, Texas; and GIVEN SECOND READING, passed and approved on the 29th day of July, **1997**, by a vote of 8 ayes and 0 nays at a regular meeting of the City Council of the City of **Arlington, Texas**.

_____
ELZIE ODOM, Mayor

ATTEST:

_____
CINDY KEMP, City Secretary

APPROVED AS TO FORM:
JAY DOEGEY, City Attorney

BY_____

ORDINANCE NO. 98-141

AN ORDINANCE AMENDING THE **"CONSTRUCTION"** CHAPTER OF THE CODE OF THE CITY OF ARLINGTON, TEXAS, 1987, THROUGH THE REPEAL OF THE EXISTING **ARTICLE I** AND THE ADOPTION OF A NEW ARTICLE I, ENTITLED BUILDING CODE, RELATIVE TO THE ADOPTION OF THE **1997 UNIFORM BUILDING CODE** WITH CERTAIN DELETIONS, AMENDMENTS AND ADDENDA; THROUGH THE AMENDMENT OF ARTICLE III, ENTITLED MOVED BUILDINGS, BY THE AMENDMENT OF **SECTION 3.09**, INSPECTIONS, RELATIVE TO BUILDING MOVER REQUESTING AN INSPECTION; THROUGH THE AMENDMENT OF ARTICLE IV, ENTITLED REGISTRATION, PERMITS AND INSPECTION, BY THE AMENDMENT OF **SECTION 4.01**, REGISTRATION, SUBSECTION (B), RELATIVE TO THE APPLICANT PROVIDING INFORMATION; BY THE AMENDMENT OF **SECTION 4.01**, SUBSECTION (F), REGISTRATION SUSPENDED, RELATIVE TO AUTHORITY OF THE BUILDING CODE BOARD; BY THE AMENDMENT OF **SECTION 4.01**, SUBSECTION (I), EXEMPTION OF OWNER, RELATIVE TO CONSTRUCTION OF FENCES; BY THE AMENDMENT OF **SECTION 4.05**, BUILDING PERMITS ISSUED, SUBSECTION (A), RELATIVE TO MAKING THE ORDINANCE GENDER NEUTRAL; BY THE AMENDMENT OF **SECTION 4.06**, VALIDITY OF PERMIT, RELATIVE TO LAWFUL WORK OR USE; BY THE AMENDMENT OF **SECTION 4.14**, CERTIFICATE OF OCCUPANCY, AT SUBSECTION (C), RELATIVE TO REQUIREMENT FOR INSPECTION AND INFORMATION PROVIDED; THROUGH THE AMENDMENT OF ARTICLE VI, ENTITLED PREFABRICATED OR MODULAR BUILDINGS, BY THE AMENDMENT OF **SECTION 6.01**, GENERAL, RELATIVE TO BUILDING INSPECTION REVIEW; THROUGH THE AMENDMENT OF ARTICLE VII, ENTITLED SIGNS, BY THE AMENDMENT OF **SECTION 7.05**, UNLAWFUL SIGNS, AT SUBSECTION (A), RELATIVE TO VIOLATION OF ANY CITY CODE; BY THE AMENDMENT OF **SECTION 7.07**, STRUCTURAL

REQUIREMENTS, AT SUBSECTION (C)(1), RELATIVE TO WORKING STRESSES; THROUGH THE AMENDMENT OF ARTICLE XIII, ENTITLED OUTDOOR FESTIVALS, BY THE AMENDMENT OF **SECTION 13.03**, APPLICATION FOR PERMIT, SUBSECTION (C)(8), RELATIVE TO VIOLATION TO THE HEALTH AND SAFETY CODE; BY THE AMENDMENT OF **SECTION 13.04**, REPORTS, SUBSECTION (B), RELATIVE TO WRITTEN REPORTS TO THE BUILDING OFFICIAL; BY THE AMENDMENT OF **SECTION 13.06**, DENIAL OF PERMIT; GROUNDS, SUBSECTION (A)(3), RELATIVE TO VIOLATION OF THE HEALTH AND SAFETY CODE; THROUGH THE DELETION OF ARTICLE XVI, ENTITLED LIFE SAFETY REQUIREMENTS FOR EXISTING BUILDINGS, AND THE RENUMBERING OF THE REMAINING ARTICLES; THROUGH THE AMENDMENT OF ARTICLE XVII, ENTITLED DANGEROUS BUILDINGS, BY THE AMENDMENT OF **SECTION 17.02**, DANGEROUS BUILDING DEFINED, AT SUBSECTION (T), RELATIVE TO PARTIALLY CONSTRUCTED BUILDINGS; THROUGH THE DELETION OF **ARTICLE XVIII**, ENTITLED ACCESSIBILITY; PROVIDING FOR A FINE UP TO **$2,000** FOR EACH OFFENSE IN VIOLATION OF THE ORDINANCE; PROVIDING THIS ORDINANCE BE CUMULATIVE; PROVIDING FOR SEVERABILITY; PROVIDING FOR GOVERNMENTAL IMMUNITY; PROVIDING FOR INJUNCTIONS; PROVIDING FOR PUBLICATION AND BECOMING EFFECTIVE TEN DAYS AFTER FIRST PUBLICATION

BE IT ORDAINED BY THE CITY COUNCIL OF THE CITY OF ARLINGTON, TEXAS:

1.

That the **"Construction"** Chapter of the Code of the City of Arlington, Texas, 1987, is hereby amended through the repeal of the existing Article I and the adoption of a new Article I, so that hereafter said Article shall be and read as follows:

ARTICLE I

BUILDING CODE

Section 1.01 Title

This Chapter shall be known as the "Building Code" of the City of Arlington.

Section 1.02 Adoption of Code

The Uniform Building Code, 1997 Edition, Volumes 1 and 2 (hereinafter called "U.B.C."), as published by the International Conference of Building Officials, is hereby adopted and designated, together with the deletions, amendments and addenda hereinafter contained, as the Building Code of the City of Arlington, the same as though said U.B.C. were copied at length herein. Copies of the U.B.C. and its Appendices shall be kept on file in the Office of the City Secretary.

Section 1.03 Code Defined; Rule of Construction

This Building Code shall include all of the provisions of the U.B.C. as adopted by Section 1.02 above and all other provisions contained herein. In the event a conflict is determined to exist between said U.B.C. as adopted and the other provisions of this Chapter, the latter provisions shall be construed as controlling and taking precedence over the former.

Section 1.04 Amendments, Additions and Deletions

The adoption of the U.B.C., as provided in Section 1.02 above, is modified and amended by the following:

A. The addition thereto of Articles II, et seq., of this Chapter.

B. The deletion in the entirety of the following provisions of the U.B.C.:

   (1) Section 102, entitled Unsafe Buildings or Structures;

(2) Section 103, entitled Violations;
(3) Section 105, entitled Board of Appeals;
(4) Section 106, entitled Permits;
(5) Section 107, entitled Fees;
(6) Section 108, entitled Inspections; and
(7) Section 109, entitled Certificate of Occupancy.
(8) Appendix Section 2501.2, entitled Inspection;
(9) Appendix Section 1515, entitled Inspections and Written Approval;

C. The amendment of the following U.B.C. provisions:

(1) The amendment of Section 101.3, entitled Scope, by the addition of the following "EXCEPTION" between the first paragraph and the second paragraph:

EXCEPTION: Storage buildings not exceeding three hundred twenty (320) square feet in area shall not be subject to the provisions of this Building Code provided:

(a) The building shall not be intended or used for human occupancy;

(b) Any mechanical, electrical or plumbing work shall be installed in full compliance with the appropriate Chapter of the Code of the City of Arlington for such work;

(c) A building on commercial property shall be anchored at each corner: said anchorage shall equal or exceed a concrete pier ten inches (10") in diameter and eighteen inches (18") in depth embedded with a standard one-half inch (½") diameter anchor bolt;

(d) The building shall be not closer than five feet (5') to a property line in residential areas and ten feet (10') to a property line in non-residential areas: subject, however, to any more restrictive setbacks contained in the "Zoning" Chapter of the Code of the City of Arlington: further, storage buildings on commercial property shall be separated from other structures and property lines as specified by U.B.C., Chapter 5;

(e) The building shall be maintained in good repair;

(f) There shall be not more than one (1) such building on any property occupied for other than residential use; and

(g) A permit for such building shall have been obtained from the Building Official.

(2) The amendment of Section 104.2.3, entitled Right of Entry, to read as follows:

Whenever necessary to make an inspection to enforce any of the provisions of this Building Code, or whenever the Building Official or an authorized representative has reasonable cause to believe that there exists in any building or upon any premises any condition or violation which makes such building or premises unsafe, dangerous or hazardous, the Building Official or an authorized representative may enter such building or premises at all reasonable times to inspect the same or to perform any duty imposed upon said Building Official by this Building Code. If such building or premises be occupied, the Building Official shall first present proper credentials and request entry. If such building or premises be unoccupied, the Building Official shall first make a reasonable effort to locate the owner or other person having charge or control of the building or premises and request entry. If such entry is refused, or, if no owner or other person having charge or control of the building or premises can be located, the Building Official or an authorized representative shall have recourse to every remedy provided by law to secure entry.

(3) The amendment of Section 104.2.5, entitled Occupancy violations, to read as follows:

Whenever any building, structure, or equipment therein which is regulated by this Building Code is being used contrary to the provisions of said Code, the Building Official or an authorized representative may order that such use be discontinued and/or that the building or structure, or a portion thereof, be vacated by written notice

served on any person who is causing such use to be continued. Further, the Building Official or an authorized representative may order the evacuation of any building or premises, or a portion thereof, which constitutes a dangerous building as defined in Article XVII of this Chapter.

Notice to stop use shall be given by personal delivery or by certified mail, return receipt requested, to the person responsible for the continued use. Such person shall discontinue the use within the time prescribed by the Building Official after receipt of such notice and shall not resume the use of the building or premises until first rendering the same in compliance with this Building Code.

Notice to vacate a dangerous building or premises shall be posted at or upon each exit of the said structure affected thereby, and shall be in substantially the following form:

"DO NOT ENTER
UNSAFE TO OCCUPY

It is a misdemeanor to occupy
this building, or to remove or
deface this notice.

Arlington Building Official
(by)_____
(date)_____
(compliance due date)_____"

No person shall remain in or enter any building or premises which has been so posted, except that entry may be made to repair, demolish or remove the unsafe condition. Such entry or the destruction, defacing or removal of said notice prior to approval by the Building Official or an authorized representative shall be a violation of this Building Code.

(4) The amendment of Section 209 to add a new definition to read as follows:

HIGH-RISE BUILDING is a building having floors used for human occupancy located more than 55 feet

(16 764 mm) above the lowest level of fire department vehicle access.

(5) The amendment of Section 214 to change the definition of "Mechanical Code" to read as follows:

MECHANICAL CODE is the International Mechanical Code™, as adopted by this jurisdiction.

(6) The amendment of Section 217 to change the definition of "Plumbing Code" to read as follows:

PLUMBING CODE is the International Plumbing Code™, as adopted by this jurisdiction.

(7) The amendment of Section 220 to add a new definition to read as follows:

SELF-SERVICE STORAGE FACILITY is real property designed and used for the purpose of renting or leasing individual storage and removing personal property on a self-service basis.

(8) The amendment of Section 220 to change the definition of "SHALL" to read as follows:

SHALL, as it applies to an act or duty to be performed by the Building Official pursuant to any section of this Building Code, is discretionary. Its use in all other applications in this Code shall be mandatory.

(9) The amendment of Section 302.4, entitled Fire Ratings for Occupancy Separations, so that "EXCEPTIONS", paragraph 3, shall read as follows:

3. In the one-hour occupancy separation between Group R, Division 3 and Group U Occupancies, the separation may be limited to the installation of not less than one-half inch gypsum board, or materials approved for one-hour fire-resistive construction on the garage side; and a tightfitting weather stripped door 1-3/8 inches (35 mm) in thickness, or a tightfitting door having a fire-protection rating of not less than 20 minutes when tested in accordance with Part II

of UBC Standard 7-2, which is a part of this code, is permitted in lieu of a one-hour fire assembly. Fire dampers need not be installed in air ducts passing through the wall, floor or ceiling separating a Group R, Division 3 Occupancy from a Group U Occupancy, provided such ducts within the Group U Occupancy are constructed of steel having a thickness not less than 0.019 inch (0.48 mm) (No. 26 galvanized sheet gage) and have no openings in to the Group U Occupancy.

(10) The amendment of Section 310.9.1.3, entitled Power Source, to add an Exception to read as follows:

EXCEPTION: Whenever rewiring or new wiring occurs during the alteration, repair or addition process that, in the opinion of the Building Official, makes it possible to hardwire the smoke detectors, then those that can be hardwired shall be installed as required for new construction.

(11) The amendment of Section 310.9.1.4, entitled Location within dwelling units, by the addition of a sentence at the end to read as follows:

If, in the opinion of the Building Official, the sounding of one alarm is not loud enough to be heard in all sleeping areas, one or more detectors may be required to be interconnected.

(12) The amendment of Section 311.2.3.5, entitled Vehicle barriers, to change the first paragraph to read as follows:

311.2.3.5 Vehicle barriers. In parking garages where any parking area is located more than 5 feet (1524 mm) above the adjacent grade, deck, floor or ramp, vehicle barriers shall be provided.

(13) The amendment of Section 403, entitled Special Provisions For Group B Office Buildings And Group R, Division 1 Occupancies, to change the Section title and the first sub-section to read as follows:

SECTION 403 -- SPECIAL PROVISIONS FOR HIGH RISE OCCUPANCIES

403.1 Scope. This section applies to all occupancies, each having floors used for human occupancy located more than 55 feet (16 764 mm) above the lowest level of fire department vehicle access. Such buildings shall be of Type I or II-F.R. construction and shall be provided with an approved automatic sprinkler system in accordance with Section 403.2.

EXCEPTION: Open parking garages in compliance with Section 311.9.

(14) The amendment of Section 403.2.2, entitled Modifications, item number 2, to read as follows:

2. Except for corridors and partitions separating dwelling units or guest rooms, all interior-nonbearing partitions required to be one-hour fire-resistive construction by Table 6-A may be of non-combustible construction without a fire-resistive time period. For allowable reduction of corridor construction, see Section 1004.3.4.3.

(15) The amendment of Section 403.2.2, entitled Modifications, by the deletion of item number 3.

(16) The amendment of Section 403.5.2, entitled Emergency voice alarm signaling system, by the addition of a third paragraph to read as follows:

Actuation of any automatic or manual device may initiate an alarm signal on the alarming floor, the floor above, and the floor below and identify on an annunciator the zone or address from which the alarm signal originated.

(17) The amendment of Section 403.5.3, entitled Fire department communication system, to read as follows:

403.5.3 Fire department communication system. A two-way, approved fire department communication system shall be provided for fire department use. It shall operate between the central control station and elevators, elevator lobbies, emergency and standby power rooms, fire pump room and inside stairways at each floor level.

(18) The amendment of Section 503.4.8, entitled Group U, Division 1 Occupancies, to add a third paragraph to read as follows:

For one- and two-family dwellings and apartment buildings, open metal carport structures may be constructed within zero (0) feet of the property line without fire-resistive or opening protection when the location of such is approved as required by other City ordinances.

(19) The amendment of Section 504.3, entitled Allowable Floor Area of Mixed Occupancies, to change the exceptions to read as follows:

EXCEPTIONS: 1. The major occupancy classification of a building may be used to determine the allowable area of such building when the major use occupies not less than 90 percent of the area of any floor of a non-sprinklered building, or not less than 80 percent of the area of any floor of a building provided with an automatic sprinkler system throughout; and provided that other minor accessory uses shall not exceed the basic area permitted by Table 5-B for such minor uses and that various uses are separated as specified in Section 302.4.

2. Groups, B, F, M and S and Group H, Division 5 Occupancies complying with the provisions of Section 505.2 may contain other occupancies provided that such occupancies do not occupy more than 10 percent of the area of any floor of a non-sprinklered building, or not more than 20 percent of the area of any floor of a building provided with an automatic sprinkler system throughout; nor more than the basic area permitted in the occupancy by Table 5-B for such occupancy, and further provided that such occupancies are separated as specified in Section 302.4.

(20) The amendment of Section 505.2, entitled Unlimited Area, to add a third paragraph to read as follows:

In other than Group H, Divisions 1, 2 or 3 Occupancies, the area of the following buildings shall not be limited if the building is provided

with an approved automatic sprinkler system throughout as specified in Chapter 9, and entirely surrounded and adjoined by public ways or yards not less than 60 feet (18 288 mm) in width. The unlimited area provisions of this paragraph cannot be used in conjunction with the fire-resistive substitution provisions of Section 508.

1. Type II-FR buildings.
2. Type II-1hr buildings with five or less stories.
3. Type II-N buildings with three or less stories.

(21) The amendment of Section 505.3, entitled Automatic Sprinkler Systems, to change items #1 through #4 to read as follows:

1. Section 904.2.6 for Group H, Division 1 and 2 Occupancies.
2. Section 505.2 for unlimited area.

(22) The amendment of Section 506, entitled Maximum Height of Buildings and Increases, to change items #1 through #5 of the second paragraph to read as follows:

1. Section 904.2.6 for Group H, Division 1, 2, 3, 6 and 7 Occupancies.
2. Section 505.2 for unlimited area.
3. Section 904.2.7 for Group I, Divisions 1.1 and 1.2 Occupancies used as hospitals, nursing homes or health-care centers in Type II One-hour, Type III One-hour, Type IV or Type V One-hour construction.

(23) The amendment of Section 508, entitled Fire-Resistive Substitution, to change item #6 to read as follows:

6. Corridors, except as specifically exempted in Sections 1004.3.4.3 (Sections 1004.3.4.3.1 and 1004.3.4.3.2).

(24) The amendment of Table 5-A, entitled Exterior Wall and Opening Protection Based on Location on Property For All Construction Types, to insert a

footnote #8 to the heading "EXTERIOR WALLS [8]" *and* add the footnote to read as follows:

[8]When the exterior wall of a non-high-rise building is more than 20 feet from the property line, the fire-resistive requirements for exterior bearing and exterior nonbearing walls may be reduced by one-hour when the building is provided with an approved automatic sprinkler system throughout as specified in Chapter 9. However, a wall that is required to be one-hour may not be reduced except as allowed under Section 508.

(25) The amendment of Table 6-A, entitled Types Of Construction - Fire-Resistive Requirements, to insert a footnote #4 in building element #8, "8. Roofs and roof-ceilings [4]" and add a footnote #4 to read as follows:

[4]The fire-resistive requirements for roofs of non-high-rise buildings may be reduced by one-hour when the building is provided with an approved automatic sprinkler system throughout as specified in Chapter 9.

(26) The amendment of Section 708.2.1; entitled Where required, to add a new sentence to item #4 to read as follows:

For combustion air ducts within dwelling units, see also Section 709.1, Exception to item #1 of the Mechanical Code.

(27) The amendment of Section 708.3.1.2.1, entitled Two or more dwelling units and hotels, to change exception #2 to read as follows:

2. Where approved sprinklers are installed within the attic space, draftstopping may be as specified in the exception to Section 708.3.1.2.2.

(28) The amendment of Section 708.3.1.2.2, entitled Other uses, to change the exception to read as follows:

EXCEPTION: Where approved automatic sprinklers are installed within the attic space, the area between draft stops may be 9,000 square feet (836 m^2) and the greatest horizontal dimension may be 100 feet (30 480 mm).

(29) The amendment of Section 709.6.1, entitled General, to amend the first paragraph to read as follows:

709.6.1 General. When protection of openings is required, through penetrations of the fire-resistive walls shall comply with Section 709.6.2 or 709.6.3.

(30) The amendment of Section 709.7, entitled Membrane Penetrations, to amend the first paragraph to read as follows:

709.7 Membrane Penetrations. When protection of openings is required, membrane penetrations of the fire-resistive walls shall comply with Section 709.6.

(31) The amendment of Section 713.10, entitled Smoke Dampers, to change item #5 to read as follows:

5. Penetrations of elevator lobbies required by Sections 403.7 and 1004.3.4.5.

(32) The amendment of Section 713.10, entitled Smoke Dampers, to add a fourth paragraph to read as follows:

For dampers in combustion air openings, see also Section 710.2 of the Mechanical Code. For dampers in use with direct-fired air-heating equipment, see also Section 915.7 of the Mechanical Code.

(33) The amendment of Section 713.11, entitled Fire Dampers, to add a fourth paragraph to read as follows:

For penetrations of ducts conveying hazardous exhausts, see also Section 510.6.4 of the Mechanical Code. For dampers in combustion air openings, see also Section 710.2 of the Mechanical Code. For dampers in use with direct-fired air-

heating equipment, see also Section 915.7 of the Mechanical Code. For penetrations of ducts in H-6 Occupancies, see also Section 1202.2.5 of this code.

(34) The amendment of Section 805, entitled Textile Wall Coverings, to read as follows:

When used as interior wall finish, textile wall coverings, including materials such as those having a napped, tufted, looped, nonwoven, woven or similar surface, shall have a Class I flame spread.

(35) The amendment of Section 902, entitled Standards of Quality, subitems 1.3, 1.4, 1.5 and 1.6 are added to read as follows:

1.3 U.B.C. Standard 9-4, Standard on Aircraft Hangars
1.4 U.B.C. Standard 9-5, Installation of Halon Fire Extinguishing System.
1.5 U.B.C. Standard 9-6, Standard for the Installation of Private Fire Service Mains and Their Appurtenances
1.6 U.B.C. Standard 9-7, Installation of Sprinkler Systems in One- and Two-Family Dwellings and Manufactured Homes

(36) The amendment of Section 904.1.1, entitled General, to read as follows:

All fire-extinguishing systems required in this Building Code shall be installed in accordance with the requirements of this Chapter except that all references to U.B.C. Standards 9-1 and 9-2 are deleted and replaced by the applicable National Fire Protection Association Standards 13, 13-D and 14 governing such items.

Required automatic sprinkler systems in Group R Occupancies of 4 stories or less may be designed in accordance with NFPA No. 13-R (1996). Sprinkler protection shall be provided throughout, including the means of egress, patios, bathrooms, closets and balconies.

EXCEPTION: Attic areas and concealed intermediate under floor spaces may be unprotected when approved fire lane access, fire hydrants, fireflow, and an approved fire alarm system is provided. Allowable tradeoffs for, or increases in, Building Code provisions based on the installation of an automatic fire-extinguishing system are not allowed.

Fire hose threads used in connection with fire-extinguishing systems shall be National Standard hose threads or alternatives approved by the Chief of the Fire Department of the City of Arlington.

In buildings used for high-piled combustible storage, fire protection shall be in compliance with the applicable provisions of the "Fire Code" Chapter of the Code of the City of Arlington.

(37) The amendment of Section 904.1.2, entitled Standards, to read as follows:

904.1.2 Standards. Fire-extinguishing systems shall comply with U.B.C. Standards 9-1, 9-2, 9-4, 9-5 and 9-6; along with the appropriate National Fire Protection Association Standards.

EXCEPTIONS: 1. Automatic fire-extinguishing systems not covered with U.B.C. Standard 9-1, 9-2, 9-4, 9-5 or 9-6 shall be approved and installed in accordance with approved standards.

2. Automatic sprinkler systems may be connected to the domestic water-supply main when approved by the building official, provided the domestic water supply is of adequate pressure, capacity and sizing for the combined domestic and sprinkler requirements. In such case, the sprinkler system connection shall be made between the public water main or meter and the building shutoff valve, and there shall not be intervening valves or connections. The fire department connection may be omitted when approved by the fire department.

3. Automatic sprinkler systems in One- and Two-Family Dwellings and Manufactured Homes may be in accordance with U.B.C. Standard 9-7.

Water supply as required for such systems shall be provided in conformance with the supply requirements of the respective standards; however, every fire protection system shall be designed with a 5 psi margin of safety.

(38) The amendment of Section 904.2.2, entitled <u>All occupancies except Group R, Division 3 and U Occupancies</u>, to change the first sentence to read as follows:

Except for Group R, Division 3 with approved fire department access and Group U Occupancies, an automatic sprinkler system shall be installed:

(39) The amendment of Section 904.2.2; entitled <u>All occupancies except Group R, Division 3 and Group U Occupancies</u>, to change item #5 and add items #6 and #7 to read as follows:

5. Throughout all buildings, other than penthouses in compliance with Section 1511, three (3) or more stories in height.

EXCEPTION: Group S-4 open parking garage structures of freestanding Type I construction.

6. High-Piled Combustible Storage. For any building with a clear height exceeding 15', see Section 8101 of the Fire Code.

7. Spray Booths and Rooms. New and existing spray booths and spraying rooms shall be protected by an approved automatic fire-extinguishing system as specified in the Fire Code.

(40) The amendment of Section 904.2.3.6, entitled <u>Amusement buildings</u>, to read as follows:

An automatic sprinkler system shall be installed in all amusement buildings (as defined in this code). The main water-flow switch shall be electrically supervised. The sprinkler main cutoff valve shall be supervised.

EXCEPTION: An automatic sprinkler system need not be provided for amusement buildings actually operating not more than thirty (30) consecutive days.

(41) The addition of Section 904.2.6.4, entitled Group H, Division 5 Occupancies, to read as follows:

904.2.6.4 Group H, Division 5 Occupancies. Aircraft hangers shall be classified by Group and Type*, and shall be provided with a fire-extinguishing system as specified by UBC Standard 9-4.

(*Note: Any classification of construction type under UBC Standard 9-4 shall be for use with that standard only and shall have no bearing on the construction type used in conjunction with any other provision of this code.)

(42) The amendment of Section 904.2.9, entitled Group R, Division 1 Occupancies, to read as follows:

904.2.9 Group R, Division 1 Occupancies. An automatic sprinkler system shall be installed throughout every apartment house three or more stories in height or containing 16 or more dwelling units, every congregate residence three or more stories in height or having an occupant load of more than 10, and every hotel three or more stories in height or containing 20 or more guest rooms. Residential or quick-response standard sprinklers shall be used in the dwelling units and guest room portions of the building. For the purpose of establishing automatic sprinkler requirements of this section, area separation walls as described in U.B.C., Section 504.6 shall not constitute separate buildings.

(43) The amendment of Section 904.2, entitled Automatic Fire-extinguishing Systems, to add Sections 904.2.10, 904.2.10.1 and 904.2.10.2 as follows:

904.2.10 Group S Occupancies.

904.2.10.1 Self-service storage facility. An automatic sprinkler system shall be installed throughout all self-service storage facilities.

EXCEPTION: One story self-service storage facilities, that have no interior corridors, with a one-hour fire-rated occupancy separation wall installed between every storage compartment.

904.2.10.2 Group S, Division 5 Occupancies. Aircraft hangers shall be classified by Group and Type*, and shall be provided with a fire-extinguishing system as specified by UBC Standard 9-4.

(*Note: Any classification of construction type under UBC Standard 9-4 shall be for use with that standard only and shall have no bearing on the construction type used in conjunction with any other provision of this code.)

(44) The amendment of Section 904.4, entitled Permissible Sprinkler Omissions, to change subparagraph 4.4 of item #4 to read as follows:

4.4 Other approved fire-protection equipment is installed in such areas.

(45) The amendment of Section 904.5.3, entitled Location of Class I standpipes, to change the third paragraph to read as follows:

There shall be a two-way outlet above the roof line on every standpipe when the roof has a slope of less than 4 units vertical in 12 units horizontal (33.3% slope).

EXCEPTION: Where the stairway extends to the roof, the two-way outlet may be located at the topmost floor landing.

(46) The amendment of Section 904.5.3, entitled Location of Class I standpipes, to add a new paragraph to read as follows:

All Class I standpipes shall be:

1. Water filled at all times; or,
2. Supervised with a minimum of 10 psig and a maximum of 40 psig air pressure with a high/low alarm.

(47) The amendment of Section 906.1, entitled When Required, to add an Exception #3 to item #1 to read as follows:

3. Buildings protected throughout by an approved automatic sprinkler system.

(48) The amendment of Section 906.6.3; entitled Location and depth, to add an Exception to read as follows:

EXCEPTION: In buildings protected throughout by an approved automatic sprinkler system, curtain boards need only to extend down from the ceiling for a minimum depth of four (4) feet.

(49) The amendment of Table 9-A, entitled Standpipe Requirements, to change Occupancy Item #5, Standpipe Class sprinklered buildings to Class "I".

(50) The amendment of Section 1004.2.4, entitled Separation of exits or exit-access doorways, to change the exception to read as follows:

EXCEPTIONS: 1. The separation distance determined in accordance with this section may be measured along a direct path of exit travel within a corridor serving exit enclosures. The walls of any such exit enclosure shall not be less than 30 feet (9144 mm), measured in a straight line, from the walls of another exit enclosure.

2. When the building is provided with an automatic sprinkler system throughout, at least two of the exits or exit-access doorways shall be placed a distance apart equal to not less than one third of the length of the maximum overall diagonal dimension of the area served, in lieu of one half, measured in a straight line between the center of such exits or exit-access doorways.

(51) The amendment of Section 1004.2.5.2.3, entitled Corridor increases, to add a second paragraph to read as follows:

When reduction of corridor construction is allowed under Section 1004.3.4.3, the reduction shall not

apply to the corridors of this section for extra travel distance.

(52) The amendment of Section 1004.2.5.2.5, entitled Factory, hazardous and storage occupancies, to read as follows:

1004.2.5.2.5 Factory, hazardous and storage occupancies. In a building classified as a Group H, Division 5 aircraft repair hangar, or as a Group F or Group S Occupancy, the travel distance shall not exceed 300 feet (91 440 mm) and may be increased to 400 feet (121 920 mm) if the building is equipped with an automatic sprinkler system throughout.

(53) The amendment of Section 1004.2.6, entitled Dead ends, to read as follows:

1004.2.6 Dead ends. Where more than one exit or exit-access doorway is required, the exit access shall be arranged such that there are no dead ends in hallways and corridors more than 20 feet (6096 mm) in length.

EXCEPTIONS: 1. In occupancies in Use Group B where the building is equipped throughout with an automatic sprinkler system, the length of dead-end corridors shall not exceed 50 feet (15 240 mm).
2. A dead-end corridor shall not be limited in length where the length of the dead-end corridor is less than 2.5 times the least width of the dead-end corridor.

(54) The amendment of Section 1004.3.4.3, entitled Construction, to change Exceptions #4, 5 and 6 to read as follows:

4. Corridor walls and ceilings of Group B Occupancies need not be of fire-resistive construction when the entire story in which the space is located is equipped with an automatic sprinkler system throughout and an automatic smoke-detection system installed within the corridor. The actuation of any detector shall activate alarms audible in all areas served by the corridor.

Use of this exception will not permit the use of non-rated non-protected construction in the following:

a. For the exit enclosure separation in exception #1 of Section 1004.2.4.
b. To obtain the 100 foot travel distance increase of Section 1004.2.5.2.3.
c. To convey air to or from rooms as stated in Section 601.2 of the Mechanical Code except that private corridors within a single tenant space may be used to convey air provided that smoke detectors are installed within the tenant corridor in accordance with their listing.

5. Except for Groups H, I and R-1 Occupancies, corridors shall not be required to be protected when the building is protected by an approved automatic sprinkler system throughout.

   Use of this exception will not permit the use of non-rated non-protected construction in the following:

   a. For the exit enclosure separation in exception #1 of Section 1004.2.4.
   b. To obtain the 100 foot travel distance increase of Section 1004.2.5.2.3.
   c. To convey air to or from rooms as stated in Section 601.2 of the Mechanical Code.

6. In Group B office buildings corridor walls and ceilings need not be of fire-resistive construction within office spaces of a single tenant when the space is equipped with an approved automatic smoke-detection system within the corridor. The actuation of any detector shall activate alarms audible in all areas served by the corridor. The smoke-detection system shall be connected to the building's fire alarm system where such a system is provided.

(55) The amendment of Section 1005.3.3.7, entitled <u>Pressurized enclosure</u>, to read as follows:

1005.3.3.7 Pressurized enclosure. In a building having a floor level used for human occupancy located more than 55 feet (16 764 mm) above the lowest level of fire department vehicle access, all required exit enclosures shall be pressurized in accordance with Section 905 and this section. Pressurization shall occur automatically upon activation of an approved fire alarm system.

EXCEPTIONS: 1. If the building is not equipped with a fire alarm system, pressurization shall be upon activation of a spot-type smoke detector listed for releasing service located within 5 feet (1524 mm) of each vestibule entry.
2. Open parking garages in compliance with Section 311.9.

A controlled relief vent capable of discharging a minimum of 2,500 cubic feet per minute (1180 L/s) of air at the design pressure difference shall be located in the upper portion of such pressurized exit enclosures.

(56) The amendment of Section 1005.3.3.7.1, entitled Vestibules, to read as follows:

1005.3.3.7.1 Vestibules. Pressurized exit enclosures shall be provided with a pressurized entrance vestibule that complies with the requirements of this section.

EXCEPTION: For buildings equipped with an automatic sprinkler system, vestibules may be omitted, provided all enclosed exit enclosures are equipped with a barometric dampered relief opening at the top and the stairway supplied mechanically with sufficient air to discharge a minimum of 2,500 cubic feet per minute (1180 L/s) through the relief opening while maintaining a minimum positive pressure of 0.15-inch water column in the shaft relative to atmospheric pressure with all doors closed.

Activation of the mechanical equipment shall be initiated by activation of an approved fire alarm system. If the building is not equipped with a fire alarm system, pressurization shall be upon activation of a spot-type smoke detector listed

for releasing service located within 5 feet (1524 mm) of each enclosure door. Such equipment shall also be activated by actuation of the automatic sprinkler system.

(58) The amendment of Section 1101.2, entitled Standards of Quality, to add an item #2 to read as follows:

2. Alternate Design

Buildings regulated under State Law and built in accordance with State certified plans, including any variances or waivers granted by the State, shall be deemed to be in compliance with the requirements of this Chapter.

(59) The amendment of Section 1202.2.1, entitled General, to add this exception after the second paragraph to read as follows:

EXCEPTION: Bathroom exhaust ducts may terminate in a warehouse or shop area when infiltration of outside air is present and the duct does not penetrate an occupancy separation.

(60) The amendment of Section 1203.3, entitled Ventilation, to change the exception after the third paragraph to read as follows:

EXCEPTION: Private laundry rooms in Group R, Division 3 and inside individual dwelling units of Group R, Division 1 Occupancies.

(61) The amendment of Section 1506.3, entitled Overflow Drains and Scuppers, to read as follows:

1506.3 Overflow Drains and Scuppers. Where roof drains are required, overflow drains shall be sized and installed in accordance with the Plumbing Code.

Overflow drains shall discharge to an approved location and shall not be connected to roof drain lines.

(62) The amendment of Table 15-A, entitled Minimum Roof Classes, to change the table and footnotes to read as follows:

*Insert a footnote #5 in the heading "TABLE 15-A - MINIMUM ROOF CLASSES [5]"

*Change the roof classes for R-3, Types III-one-hour, III-N, IV, V-one-hour and V-N from "NR" to "C".

*Delete footnotes 1 and 3.

*Change footnote #4 to read as follows:

[4]When exceeding 120 sq. ft. of projected roof area, the roof class shall be a minimum of Class C or shall be non-combustible.

*Add a footnote #5 to read as follows:

[5]All individual replacement shingles or shakes shall be in compliance with the rating required by this table.

(63) The amendment of Section 1611.6, entitled Retaining Walls, by the addition of the following paragraph and "EXCEPTION":

Retaining walls exceeding three feet (3') in height shall be constructed of materials other than wood, including treated wood products, and shall be designed by a professional engineer. A wall built in tiers shall be considered a single wall in height when the upper tier is set back less than one and one-half (1½) times the height of the wall section below.

EXCEPTION: Retaining walls erected on properties used for Group R-3 occupancies may be constructed up to six feet (6') in height of any approved materials. A professional engineer shall design these retaining walls when exceeding a height of four feet (4'). Unless specifically approved by the Building Official, such walls shall not support a building, driveway or other permanent construction closer to the wall than one and one-half (1½) times the full height of the wall.

(64) The amendment of Section 1701.1, entitled General, to read as follows:

All construction or work for which a permit is required shall be subject to inspection by the Building Official. The Building Official may require certain types of construction to have continuous inspection by special inspectors as specified in Chapter 17 of this code.

(65) The amendment of Section 1905.7.1, by the addition of Paragraph 8 to read as follows:

8. For concrete floor slabs supported directly on the ground in Group R-3 Occupancies, a vapor barrier approved by the Building Official or an authorized representative shall be installed beneath the slab.

(66) The amendment of Section 2310.4, entitled Shingles or Shakes, by the addition of the following "EXCEPTION":

EXCEPTION: Wood shingles and shakes shall not be used as an exterior wall covering within seven feet (7') of grade for Group R-1 Occupancies.

All wood shingles or shakes to be used as an exterior wall covering for Group R-1 Occupancies shall be fire-retardant shakes and shingles. Fire-retardant shakes and shingles are wood shakes and shingles complying with U.B.C. Standard No. 15-3 or 15-4 impregnated by the full-cell vacuum-pressure process with fire retardant chemicals, and have been qualified by U.B.C. Standard No. 15-2 for use on Class A, B or C roofs. Each bundle of treated wood shakes and shingles shall bear labels identifying their roof covering classification and approved quality control agency.

(67) The amendment of Section 2406.4, entitled Hazardous Locations, number 8, so that "EXCEPTION", number 5, shall read as follows:

5. Assemblies of leaded, faceted or carved glass, in items 1, 2, 6 and 7 when used for

decorative purposes or item 5 when not equipped with a showerhead.

(68) The amendment of Section 2902.3, entitled Groups B, F, H, M and S Occupancies, so that the first paragraph reads as follows:

2902.3 Groups B, F, H, M, and S Occupancies. In Groups B, F, H, M, and S Occupancies, buildings or portions thereof where persons are employed shall be provided with at least one water closet. Separate facilities shall be provided for each sex when the number of employees exceeds ten. Such toilet facilities shall be located either in such building or conveniently in a building adjacent thereto on the same property.

EXCEPTION: When public restrooms are required and the occupant load is less than 16, a single unisex restroom facility is permitted.

(69) The amendment of Section 3301.1, entitled General, by the addition of the following five (5) paragraphs and one (1) "EXCEPTION" between the first and second paragraphs:

Should trench excavations exceed five feet (5') in depth, bid documents and construction contracts must include provisions for specifications for adequate safety systems that meet Occupational Safety and Health Administration (OSHA) standards. Further, these plans and specifications shall include a pay item for these safety systems, which is to be a part of the contract. In addition, a safety program outline shall be provided to the property owner by the contractor and the contractor's safety record shall be reviewed as a condition of the contract award.

Prior to performing such excavations, the contractor must submit plans and specifications for trench shoring to the Building Official for review. The plans shall be stamped, signed and dated by a registered professional engineer attesting that these plans meet OSHA requirements in accordance with state law.

The contract requirements of this Section shall not apply to contracts entered into with persons subject to the safety standards adopted under V.A.C.S., Article 6053-1, entitled Transportation of Gas and Gas Pipeline Facilities.

Acceptable fill shall only be comprised of one (1) or more of the following materials: Dirt, concrete or asphalt. No person shall cause, allow, suffer or permit fill containing any other material to be used for any building, structure, foundation or retaining structure.

No person shall cause, allow, suffer or permit fill to be placed or stored, upon any undeveloped lot not currently experiencing ongoing construction, in such a manner that said fill is not spread uniformly so that no area of fill differs in height by more than twenty-four inches (24") from any other area of fill on said lot. Provided, however, that upon written notice by the Building Official or a designated representative, the record property owner of any such lot shall be allowed forty-five (45) days to remove or spread said fill in order to comply with this provision. Notice shall be deemed sufficient for this purpose if mailed, by certified mail, return receipt requested, to the last-known address of the record property owner, or if personally delivered to said owner.

EXCEPTION: This provision shall not apply to fill located upon the premises of a business, which provides said fill to others for compensation. A valid certificate of occupancy for such business shall be sufficient to establish the applicability of this exception.

(70) The amendment of Section 3504, entitled Recognized Standards, Part II, Chapter 9, to read as follows:

9-1; 307.11.3, 321.1, 403.2, 404.3.1, 405.1.1, 804.1, 902, 904.1.2, 904.1.3, 904.2.6.3, 904.2.7, 904.3.2, 2603.7.1, 2603.8.1

Installation of Sprinkler Systems. Standard for the Installation of Sprinkler Systems, NFPA 13-1996, National Fire Protection Association.

9-2; 902, 904.1.2, 904.5.1
Standpipe Systems. Standard for Installation of Standpipe Systems and Hose Systems, NFPA 14-1996, National Fire Protection Association.

9-3; 804.1, 805, 902, 904.1.2, 904.1.3, 2603.7.1, 2603.8.1
Installation of Sprinkler Systems in Group R Occupancies Four Stories or less. Standard for the Installation of Sprinkler Systems in Residential Occupancies up to Four Stories in Height, NFPA 13R-1996, National Fire Protection Association.

9-4; 902, 904.2.6.4, 904.2.10.2
Aircraft Hangars. Standard on Aircraft Hangars, NFPA 409-1995, National Fire Protection Association.

9-5; 902, 904.1.2
Halon Fire Extinguishing System. Standard on Halon 1301 Fire Extinguishing Systems, NFPA 12A-1992, National Fire Protection Association.

9-6; 902, 904.1.2
Standard for the Installation of Private Fire Service Mains and Their Appurtenances, NFPA 24-1995, National Fire Protection Association.

9-7; 902, 904.1.2
Installation of Sprinkler Systems in One-Two-Family Dwellings and Manufactured Homes, NFPA 13D-1996, National Fire Protection Association.

(71) The amendment of Appendix B, Chapter 4, Division I, Section 419, entitled General, to read as follows:

The provisions of this section shall apply to the design and construction of barriers for all swimming pools.

EXCEPTION: The following uses are regulated by State statute and are not subject to this section:

1. Group R-1 apartments.

2. A pool owned, controlled, or maintained by the owner of a multi-unit rental complex or by property owners association.

(72) The amendment to Appendix B, Chapter 4, Division I, Section 420 entitled Definitions, by the addition of the following definitions:

MULTI-UNIT RENTAL COMPLEX is two or more dwelling units in one or more buildings that are under common ownership, managed by the same owner, managing agent, or management company, and located on the same lot or tract of land or adjacent lots or tracts of land. The term includes a condominium project. The term does not include:

(A) A facility primarily renting rooms to overnight guests; or

(B) A single-family home or adjacent single-family homes that are not part of a condominium project.

POOL DECK is a flat walking surface consisting of wood, stone, brick, concrete or other similar material located within five feet (5') of the waters edge of a swimming pool or spa.

PROPERTY OWNERS ASSOCIATION is an association of property owners for a residential subdivision, condominium, cooperative, townhouse project, or other project involving residential dwellings.

SELF-CLOSING GATE is a gate, which closes or shuts automatically, without the aid of human, electrical, solar or battery power after being opened.

SELF-CLOSING AND SELF-LATCHING DEVICE is a device that causes a gate to automatically close and latch without human, electrical, solar or battery power.

(73) The amendment of Appendix B, Chapter 4, Division I, Section 421.1, entitled Outdoor Swimming Pool, by the addition of an exception to number 1 to read as follows:

EXCEPTION: When horizontal members are part of a fence that is at least 6 feet (1830 mm) in height, the horizontal members need not be on the pool side of the barrier.

(74) The amendment of Appendix B, Chapter 4, Division I, Section 421.1, entitled Outdoor Swimming Pool, by the addition of an exception to number 4 to read as follows:

EXCEPTION: Driveway access gates across a paved or improved surface intended for regular vehicle access shall not be located in a swimming pool barrier."

(75) The amendment of Appendix Section 1107; entitled Accessible Exterior Routes, to add a paragraph to read as follows:

1107.4 Alternate Design. Buildings regulated under State law and built in accordance with State certified plans, including any variances or waivers granted by the State, shall be deemed to be in compliance with the requirements of this Chapter.

(76) The amendment of Appendix Chapter 15, entitled Reroofing, Section 1516.3, entitled Overlay on Existing Wood Roofs or Asphalt Shingle Roofs, subparagraph #1, to read as follows:

1. **Asphalt shingles.** Not more than one overlay of asphalt shingles shall be applied over an existing asphalt or wood shingle roof.

Section 1.05 Adoption of Appendices

The following referenced provisions of the U.B.C. annexed hereto as appendices, the same being either attached hereto or incorporated herein by reference, are made a part of this Building Code.

Appendix A. The entire provisions of the Uniform Building Code Standards, Volume 3, 1997 Edition, as promulgated by the International Conference of Building Officials.

Appendix B. Only Chapter 4, Division II, entitled Aviation Control Towers; Chapter 3, Division I, entitled Detention and Correctional Facilities; Chapter 3, Division II, entitled Agricultural Buildings; Chapter 4, Division I, entitled Barriers for Swimming Pools, Spas and Hot Tubs; Chapter 11, Division I, entitled Site Accessibility; Chapter 11, Division II, entitled Accessibility for Existing Buildings; Chapter 15, entitled Reroofing; Chapter 29, entitled Minimum Plumbing Fixtures; Chapter 31, Division III, entitled Patio Covers; and Chapter 31, Division II, entitled Membrane Structures, of the Appendix to the Uniform Building Code, 1997 Edition.

All other Chapters of said Appendix to the U.B.C. are hereby omitted from this Building Code.

Section 1.06 Construction Prohibited in Public Easements

A. Regardless of materials, manner of construction or unique characteristics of land, it shall be unlawful for any person, firm or corporation to cause or permit the installation, revision or relocation of any construction improvement where any part of such improvement is to be located in a public easement. The foregoing prohibition shall not apply to proposed improvements in utility easements consisting of paving, flatwork, wooden or chain link fences or retaining walls less than three feet (3') in height which do not support a structure, provided that the proposed improvements have been approved in writing by the Building Official with the concurrence of the City Engineer and the Director of Water Utilities prior to their construction.

B. In cases where improvements other than those listed in Subsection (A) above are proposed in City easements, application shall be made to the Building Official for the execution of an Easement Joint-Use Agreement. If, in the determination of the Building Official after conferring with the other appropriate departments of the City of Arlington, such Joint-Use Agreement cannot be executed, the Building Official will refer the request to the Building Code Board of Appeals for final determination.

C. The City of Arlington shall not be liable for damages or losses of any kind whatsoever by reason of injury to property or person occasioned by the use of any easement. The City shall have no obligations in regards to the maintenance of any improvements within such easement or right-of-ways. The City shall be defended at the cost and expense of the person placing improvements in any easements or right-of-ways from all claims and demands. The use of any easement in right-of-ways shall be discontinued and improvements removed within 30 days of notification by the City and the cost of the discontinuation and removal of improvements shall be borne by the owner of the improvement.

D. The term "improvement" includes, but is not limited to, concrete or asphalt paving, swimming pools, fences, retaining walls, temporary or permanent buildings, earth fill or excavation and landscaping. "Improvements" shall not include public or private mailboxes, or poles and boxes necessary for public utility services.

The term "easement" shall include easements for right-of-way, streets, drainage and utilities.

Section 1.07 <u>Requirements for Drainage</u>

A. No person, firm or corporation within the corporate limits of the City of Arlington, Tarrant County, Texas, shall do, cause or permit to be done, the installation, modification or relocation of any construction improvement where the improvement, when completed, will significantly increase the speed or volume of water flowing across or standing on other property which is either upstream or downstream from the property on which the improvement is to be made so as to cause damage to such other property, nor shall the Building Official be required to issue a building permit where engineering data from a qualified professional engineer reveals that such improvement would worsen any existing drainage or flooding problem or would cause any damage to such other property.

B. The term "improvement" means any of those things which require a building permit, such as buildings (either permanent or temporary), land development, concrete or asphalt paving, swimming pools, fences, retaining

walls, earth fill or excavation and landscaping. "Improvement" shall not include poles or boxes necessary for public utility service.

C. Prior to obtaining a building permit, and to ensure that there will be no surface drainage problems after the construction of the proposed improvement, an acceptable drainage plan will be filed with the Building Inspections Department of the City of Arlington which accurately shows all run-off water which comes onto the property being so improved, the method of conveying the water across the property, and the method and place of discharge for the run-off water leaving the property. Such plans shall show the capacity of the adjacent property, public way, easement or drainage facility, as the case may be, to receive such amounts of water. No surface drainage plan is required to be filed with said City for improvements on lots containing or to contain group R-3 occupancies, provided the drainage for such improvement is made to comply with H.U.D. (F.H.A.) Requirements for surface drainage as contained in the current H.U.D. Data Sheet 72 or H.U.D. Data Sheet 73 as the same may, from time to time, be amended. Such requirements and future amendments are incorporated in this Building Code and made a part hereof for all purposes: provided, however, that the Building Official may require the submission of a surface drainage plan for such exempt properties when, in the Building Official's opinion, such plan is necessary to prevent a drainage problem. If the builder wants the drainage for any improvement on such exempt properties to deviate from H.U.D. (F.H.A.) requirements, then the builder must submit an acceptable drainage plan meeting the requirements contained in this Section.

D. All construction of improvements shall be done to comply with an approved drainage plan as provided for in this Section or H.U.D. (F.H.A.) Requirements, as applicable.

Section 1.08 <u>Enforcement, Violations and Penalties</u>

A. It shall be unlawful for any person, firm or corporation to erect, construct, enlarge, alter, repair, move, improve, remove, convert, demolish, equip, use, occupy or maintain any building, structure or premises

in the City of Arlington, or cause or permit the same to be done, contrary to or in violation of any of the provisions of this Building Code.

B. Any person, firm or corporation violating any of the provisions of this Building Code shall be deemed guilty of a misdemeanor and each day the violation continues shall be a separate offense. Each offense shall be punishable by a fine of not more than Two Thousand Dollars and No Cents ($2,000.00).

C. In addition to the power of the Building Official under U.B.C., Section 104.2.3, entitled "Right of Entry," to inspect a building pursuant to this Building Code, any peace officer may enter the public areas of any building or premises, or any areas specified in a proper inspection warrant, at all reasonable times wherever necessary in the performance of official duties to inspect and investigate for violations of any law, or to enforce any law, including violations of this Building Code. The peace officer shall first present proper credentials and request entry, unless otherwise permitted by law. If such entry is refused or, if no owner or other person having charge or control of the building or premises can be located, the peace officer shall have recourse to every remedy provided by law to secure entry.

D. No owner, occupant or any other person having charge, care or control of any building or premises shall fail or neglect, after proper request is made pursuant to Subsection (C) above, to promptly permit entry therein by a peace officer in the performance of the peace officers duty. Any person violating this Subsection shall be guilty of a misdemeanor.

Section 1.09 <u>Skateboard Ramps</u>

A. As used in this Section, the phrase "skateboard ramp" shall refer to a structure or piece of work artificially built up or composed of parts joined together in some definite manner, regardless of the materials used or the manner of construction, which is primarily used for, or designed and intended for primary use as, a ramp for skating or skateboarding activities.

B. It shall be unlawful for any person to erect, construct, keep, maintain or use a skateboard ramp that is located:

(1) at a distance closer than one hundred fifty feet (150') from any building located on another's property that is used or intended to be used for habitation, regardless of whether the habitation existed prior to the erection of said skateboard ramp; or

(2) at a distance closer than fifty feet (50') from the property line of the lot where said skateboard ramp is located.

C. Should a habitation be placed on another's property closer than one hundred fifty feet (150') to an existing skateboard ramp, the owner of said skateboard ramp shall remove or relocate, or cause to be removed or relocated, said skateboard ramp within ninety (90) days of the completion of construction of the habitation.

D. Failure to remove or relocate, or cause to be removed or relocated, a skateboard ramp as required by this Section shall constitute a misdemeanor. Each day that a skateboard ramp remains in violation of this Section shall constitute a separate offense.

Section 1.10 Presumption

Unless otherwise specified in this Chapter, the owner, occupant or person in control of any building or premises where any violation of this Building Code is found shall be prima facie responsible for such violation.

Further, Article III, Moved Buildings, is hereby amended by the amendment of **Section 3.09**, Inspections, so that hereafter said section shall be and read as follows:

Section 3.09 Inspections

Once the structure has been removed, the building mover must call an inspection. Plumbing capped off shall remain uncovered in order to facilitate inspection.

Further, Article IV, Registration, Permits and Inspections, is hereby amended by the amendment of **Section 4.01**, Registration, Subsection (B), so that hereafter said subsection shall be and read as follows:

B. An applicant for registration under this article shall provide to the Building Official the following information:

1. The complete name, complete mailing address and telephone number of the firm or corporation;

2. The name and private mailing address of a principal of the firm or corporation who is a person authorized to bind the firm or corporation in legal agreements;

3. If the registration is to be as an individual only, the name, mailing address and telephone number of the individual; and

4. Other pertinent information deemed necessary by the Building Official.

Every Registrant shall contact the office of the Building Official to ensure the accurate revision of registration information, including any change of address or telephone number, within ten (10) days from the date that the previous information supplied in the application becomes invalid for any reason. Failure to revise inaccurate information, or providing false, misleading or inaccurate information when applying for registration, shall constitute an offense.

Every Registrant doing work in any City rights-of-way shall carry Contractor's Public Liability Insurance with a combined single limit of not less than Five Hundred Thousand and No/100 Dollars ($500,000.00) per occurrence, with an aggregate of not less than Five Hundred Thousand and No/100 Dollars ($500,000.00). The Registrant shall make the City of Arlington a Certificate Holder and present proof of insurance at the time of registration and all subsequent renewals. Notice of policy cancellations or failure to renew coverage shall be cause for revocation of registration, denial of inspections or cancellation of permits.

Further, Article IV is hereby amended by the amendment of **Section 4.01**, Subsection (F), so that hereafter said subsection shall be and read as follows:

F. **Registration Suspended**. The Building Code Board of Appeals shall have the authority to suspend any registration issued under this article for any of the following acts by the Registrant:

1. Forfeiting an appeal of a Stop Order issued under U.B.C., Section 104.2.4, by continued work after the issuance of said Stop Order;

2. Forfeiting an appeal under Section 2.06(C) above of this Building Code by initiating work in violation of the Board's decision or prior to the Board's decision;

3. Causing or permitting the unauthorized or prohibited transfer or assignment of a valid registration, or providing false, misleading or inaccurate information when applying for registration; or

4. Being convicted in Municipal Court of two (2) violations of any of the provisions of this Building Code committed within a period of twelve (12) consecutive months provided, however, that remedy of the violation within twenty (20) days of a Stop Order shall cause the waiver of any conviction for the original violation for the purpose of this subsection.

Such suspension of registration shall be for a time not to exceed six (6) months. After expiration of such period of time as the Board shall have designated, and after payment of any outstanding fines and the routine renewal fee if it has become due in the interim, the suspended registration shall again become valid and effective for the balance of its time until expiration or a subsequent suspension or revocation.

Further, Article IV is hereby amended by the amendment of **Section 4.01**, Subsection (I), so that hereafter said subsection shall be and read as follows:

I. **Exemption for Owner.** Except for permits required by Article VIII below, no such registration procedure

shall be required for minor alteration or repair work to be performed on an existing structure when the person performing the alteration or repair work is the owner of the structure, and is not assisted by any other person for remuneration. A homeowner may construct an addition to a residential structure of legal residence. Minor accessory structures such as storage buildings (not exceeding 320 square feet in area) and fences may be constructed by the owner of a property without registration. The Owner shall be automatically termed a Registrant for the purposes of such a project without registration. Notwithstanding such relief from registration, all requirements for permits for the work and all other applicable provisions of this Building Code shall remain in force.

Further, Article IV is hereby amended by the amendment of **Section 4.05,** Building Permits Issued, Subsection (A), so that hereafter said subsection shall be and read as follows:

Section 4.05 Building Permits Issued

A. The application, plans and specifications filed by an applicant for a permit shall be reviewed by the Building Official. Such plans may also be reviewed by other departments of the City of Arlington to check compliance with the laws and ordinances under their jurisdiction, including but not limited to review by the Engineering Services, Utilities, Fire, Health, City Arborist and the Transportation Department of the City of Arlington to ensure compliance with the Traffic Study Provisions adopted by resolution of the City Council of said City. If the Building Official finds that the work described in an application for permit and the plans filed therewith conform to the requirements of this Building Code and other pertinent laws and that the permit fee has been paid, a permit shall be issued, however, except by specific approval by the Building Official or an authorized representative, a permit shall not be issued in a development where the construction of streets, drainage, water, sewer and other such facilities have not been completed and accepted by the City of Arlington.

Further, Article IV is hereby amended by the amendment of **Section 4.06**, Validity of Permit, so that hereafter said section shall be and read as follows:

Section 4.06 Validity of Permit

The issuance or granting of a permit or acceptance of plans and specifications shall not be construed to be a permit for, or an approval of, any violation of any of the provisions of this Building Code or any other applicable law. No permit presuming to give authority to violate or cancel the provisions of this Building Code shall be valid, except as the work or use, which it authorizes, is lawful.

The issuance of a permit based upon plans and specifications shall not prevent the Building Official from thereafter requiring the correction of errors in said plans and specifications or from preventing building operations being carried on thereunder when in violation of this Building Code or of any other chapter of the Code of the City of Arlington.

In the event a court of competent jurisdiction determines that lawfully filed deed restrictions or lawfully filed real property restrictive covenants on single family residential property within the City of Arlington would be violated by the construction that is the subject of the permit, such court may restrain or enjoin the Building Official from issuing the building permit for a period not to exceed sixty (60) days.

Further, Article IV is hereby amended by the amendment of **Section 4.14**, Certificate of Occupancy, Subsection (C), so that hereafter said subsection shall be and read as follows:

C. Certificate Issued. The Building Official shall issue a Certificate of Occupancy upon a finding that the premises complies with the Building Code and provisions of the "Zoning" Chapter of the Code of the City of Arlington. For new structures or when the occupant is of a different character of occupancy or use from the previous certificate holder, the Building Inspections Division shall make an inspection. Where no change in character of occupancy is proposed for a structure previously granted a Certificate of Occupancy, no inspection is necessary unless specifically required by

the Building Official. In the event that a tenant space is being altered, enlarged or reduced in size, or if the Building Official believes that the previous tenant altered the space without benefit of permits, an inspection may be required prior to the occupancy. Other City departments may require inspections prior to the granting of a Certificate of Occupancy.

The Certificate of Occupancy shall contain:

1. The address of the building;

2. The name, address and telephone number of the occupant of said premises, building or structure;

3. The allowable use for which the certificate is issued;

4. The zoning district in which the use is located; and

5. Any conditions of the granting of the certificate.

Further, Article VI, Prefabricated or Modular Buildings, is hereby amended by the amendment of **Section 6.01**, General, so that hereafter said section shall be and read as follows:

Section 6.01 General

All modular buildings shall comply with V.A.C.S., Article 5221f-1, "Industrialized Housing and Buildings".

All modular buildings shall have submitted for approval by the applicant a building permit request along with all plans and specifications deemed necessary by the Building Official. Such plans shall bear the stamp of a design review agency approved by the State of Texas. The Building Official shall review such plans for compliance with all applicable laws. Further, each modular component shall bear the decal of the Texas Department of Labor and Standards.

Further, Article VII, Signs, is hereby amended by the amendment of **Section 7.05**, Unlawful Signs, Subsection (A), so that hereafter said subsection shall be and read as follows:

Section 7.05 **Unlawful Signs**

A. A sign, which is installed, erected or constructed in violation of any Chapter of the Code of the City of Arlington, is hereby declared to be a nuisance.

Further, Article VII is hereby amended by the amendment of **Section 7.07**, Structural Requirements, at Subsection (C)(1), so that hereafter said subsection shall be and read as follows:

(1) In any sign construction, the allowable working stresses shall conform to the requirements of U.B.C., Section 1613.

Further, Article XIII, Outdoor Festivals, is hereby amended by the amendment of **Section 13.03**, Application for Permit, Subsection (C)(8), so that hereafter said subsection shall be and read as follows:

8. A detailed statement describing the promoter's preparations for the event designed to comply with the minimum standards of sanitation and health required by Health and Safety Code, Chapter 341;

Further, Article XIII is hereby amended by the amendment of **Section 13.04**, Reports, Subsection (B), so that hereafter said subsection shall be and read as follows:

B. The departments listed in Subsection (A) above shall make a written report to the Building Official. The report shall state whether the preparations described in the application, if carried out, would be sufficient to protect the community and the persons attending the outdoor festival from health dangers, public safety and traffic control hazards, and to avoid violations of Health and Safety Code, Chapter 341.

Further, Article XIII is hereby amended by the amendment of **Section 13.06**, Denial of Permit; Grounds, Subsection (A)(3), so that hereafter said subsection shall be and read as follows:

3. The preparations specified in the application are insufficient to protect the community or the persons attending the event from health dangers or to avoid violations of Health and Safety Code, Chapter 341;

Further, **Article XVI,** Life Safety Requirements for Existing Buildings, is hereby amended by the **deletion** of Article XVI and the **renumbering** of the remaining Articles.

Further, Article XVII is hereby amended by the amendment of **Section 17.02**, Dangerous Building Defined, Subsection (T), so that hereafter said subsection shall be and read as follows:

T. When a building which is partially constructed, has not had any significant construction work done on it in the preceding six (6) months, and all building materials and construction equipment and tools have neither been removed from the construction site nor secured at the site to prevent their use by children; their theft; their deterioration; their vandalism; or their harborage of rodents or insects.

Further, **Article XVIII**, Accessibility, is hereby **deleted**.

2.

Any person, firm, corporation, agent or employee thereof who violates any of the provisions of this ordinance shall be guilty of a misdemeanor and upon conviction thereof shall be fined an amount not to exceed **Two Thousand and No/100 Dollars ($2,000)** for each offense. Each day that a violation is permitted to exist shall constitute a separate offense.

3.

This ordinance shall be and is hereby declared to be cumulative of all other ordinances of the City of Arlington, and this ordinance shall not operate to repeal or affect any of such other ordinances except insofar as the provisions thereof might be inconsistent or in conflict with the provisions of this ordinance, in which event such conflicting

provisions, if any, in such other ordinance or ordinances are hereby repealed.

4.

If any section, subsection, sentence, clause or phrase of this ordinance is for any reason held to be unconstitutional, such holding shall not affect the validity of the remaining portions of this ordinance.

5.

All of the regulations provided in this ordinance are hereby declared to be governmental and for the health, safety and welfare of the general public. Any member of the City Council or any City official or employee charged with the enforcement of this ordinance, acting for the City of Arlington in the discharge of his/her duties, shall not thereby render himself/herself personally liable; and he/she is hereby relieved from all personal liability for any damage that might accrue to persons or property as a result of any act required or permitted in the discharge of his/her said duties.

6.

Any violation of this ordinance can be enjoined by a suit filed in the name of the City of Arlington in a court of competent jurisdiction, and this remedy shall be in addition to any penal provision in this ordinance or in the Code of the City of Arlington.

7.

The caption and penalty clause of this ordinance shall be published in a newspaper of general circulation in the City of Arlington, in compliance with the provisions of Article VII, Section 15, of the City Charter. Further, this ordinance may be published in pamphlet form and shall be admissible in such form in any court, as provided by law.

8.

This ordinance shall become effective ten (10) days after first publication as described above.

PRESENTED AND GIVEN FIRST READING on the 20th day of October, **1998**, at a regular meeting of the City Council of the City of Arlington, Texas; and GIVEN SECOND READING,

passed and approved on the 27th day of October, **1998**, by a vote of 9 ayes and 0 nays at a regular meeting of the City Council of the City of **Arlington, Texas**.

ORDINANCE NO. 98-146

AN ORDINANCE AMENDING THE **"CONSTRUCTION"** CHAPTER OF THE CODE OF THE CITY OF ARLINGTON, TEXAS, 1987, THROUGH THE AMENDMENT OF **ARTICLE XIII**, ENTITLED OUTDOOR FESTIVALS, BY THE AMENDMENT OF **SECTION 13.03**, APPLICATION FOR PERMIT, SUBSECTION (B), RELATIVE TO FAILURE TO TIMELY FILE; BY THE AMENDMENT OF **SECTION 13.03**, SUBSECTION (C), RELATIVE TO ADDITIONAL SUBMISSIONS THE BUILDING OFFICIAL MAY REQUIRE; BY THE AMENDMENT OF **SECTION 13.03**, BY THE DELETION OF SUBSECTION (D), AND THE RELETTERING OF THE REMAINING SUBSECTION; BY THE AMENDMENT OF **SECTION 13.04**, REPORTS, RELATIVE TO WHICH CITY DEPARTMENTS RECEIVE NOTICE OF FILING OF PERMIT APPLICATION; BY THE AMENDMENT OF **SECTION 13.05**, CONDITIONS FOR PERMIT, SUBSECTION (A), RELATIVE TO RESTRICTIONS IMPOSED ON THE PERMITTEE; BY THE AMENDMENT OF **SECTION 13.05**, SUBSECTION (B), RELATIVE TO INSURANCE REQUIREMENTS; BY THE AMENDMENT OF **SECTION 13.05**, SUBSECTION (C), RELATIVE TO BOND REQUIREMENTS; BY THE AMENDMENT OF **SECTION 13.06**, DENIAL OF PERMIT; GROUNDS, SUBSECTION (A)(3), RELATIVE TO UPDATING THE REFERENCE TO STATUTE; BY THE AMENDMENT OF **SECTION 13.06** BY THE DELETION OF SUBSECTION (A)(10) AND THE ADDITION OF NEW SUBSECTIONS (A)(10), (A)(11) AND (A)(12) RELATIVE TO REMOVING AND ADDING GROUNDS FOR DENIAL; BY THE AMENDMENT OF **SECTION 13.07**, REVOCATION OF PERMIT, RELATIVE TO EMPOWERING CERTAIN CITY OFFICIALS TO REVOKE A PERMIT AFTER NOTICE; BY THE AMENDMENT OF **SECTION 13.09**, PERMIT POSTING, RELATIVE TO THE LOCATION AND CONTENT OF THE POSTING; BY THE ADDITION OF **SECTION 13.11**, PENALTY, RELATIVE TO THE PROVISION OF A FINE OF UP TO **$2,000** FOR EACH OFFENSE IN VIOLATION OF THE ORDINANCE; PROVIDING THIS ORDINANCE BE CUMULATIVE; PROVIDING FOR SEVERABILITY; PROVIDING FOR GOVERNMENTAL IMMUNITY;

PROVIDING FOR INJUNCTIONS; PROVIDING FOR PUBLICATION AND BECOMING EFFECTIVE TEN DAYS AFTER FIRST PUBLICATION

BE IT ORDAINED BY THE CITY COUNCIL OF THE CITY OF ARLINGTON, TEXAS:

1.

That the **"Construction"** Chapter of the Code of the City of Arlington, Texas, 1987, is hereby amended through the amendment of Article XIII, Outdoor Festivals, by the amendment of **Section 13.03**, Application for Permit, Subsection (B), so that hereafter said subsection shall be and read as follows:

B. The original application must be filed at least sixty (60) days before the day the event is to be held. Failure to meet the filing requirement may result in denial of the application. This requirement may be waived by the Building Official if all other conditions of this Article are met.

Further, Article XIII is hereby amended by the amendment of **Section 13.03**, Subsection (C), so that hereafter said subsection shall be and read as follows:

C. The Building Official may require submittal of the following:

1. The name, telephone numbers and address of the promoter and the names, addresses, and telephone numbers of all associates and employees of the promoter assisting in the promotion of the event;

2. A financial statement of the promoter and a statement specifying from whom capital for the event is being supplied and in what amounts;

3. A description and the address of the premises where the event is to be held;

4. The name and address of the owner of the premises where the event is to be held and a statement describing the terms and conditions of the agreement whereby the promoter is authorized to use the land;

5. A letter from the owner(s) of the premises acknowledging responsibility for cleaning up the property and surrounding rights-of-way as may be applicable, including charges assessed by the City for expenses incurred by the City of Arlington. A bond for clean up may be required by the City of Arlington. The owner shall provide an address and telephone numbers where he or she may be contacted.

6. The dates and times that the event is to be held;

7. The maximum number of persons that the promoter will allow to attend the event and a statement showing how the promoter plans to control the number of persons in attendance at the event. A security plan may be required by the Police Department and the posting of a bond to ensure adequate security staffing for the event;

8. A description of the promoter's agreements with the performers who are scheduled to appear at the event;

9. A detailed statement describing the promoter's preparations for the event designed to comply with the minimum standards of sanitation and health protection measures required by V.T.C.A., Health and Safety Code, Section 341, to include but not be limited to restrooms, gratis drinking water and shade structures as determined by the Health Department. In addition, provisions for emergency medical and health care services may be required by the City;

10. A detailed statement describing the promoter's preparations for the event designed to comply with the standards for a Certificate of Occupancy and all other requirements of the applicable Chapters of the Code of the City of Arlington, including but not limited to the provisions of the "Fire Code" and "Zoning" Chapters of said Code; and

11. A complete listing of similar events the applicant has promoted in the past three (3) years, including the date, time and location of each.

EXCEPTION: Events which have an expected attendance of fewer than 1,000 persons and which are to take place at

a location for which a Certificate of Occupancy has been granted for entertainment uses shall not be required to submit 1, 2, 4, 8, 9, 10 and 11 above.

Further, Article XIII is hereby amended by the **deletion** of **Section 13.03**, **Subsection (D)** and the relettering of the remaining subsection.

Further, Article XIII is hereby amended by the amendment of **Section 13.04**, Reports, so that hereafter said section shall be and read as follows:

A. Upon the filing of an application for a permit under this Article, the Building Official shall forward a copy of said application to the Arlington Health, Police, Fire and Transportation Departments.

B. The departments listed in Subsection (A) above shall make a written report to the Building Official. The report shall state whether the preparations described in the application, if carried out, would be sufficient to protect the community and the persons attending the outdoor festival from health dangers, public safety and traffic control hazards, and to avoid violations of V.T.C.A., Health and Safety Code, Section 341.

Further, Article XIII is hereby amended by the amendment of **Section 13.05**, Conditions for Permit, Subsection (A), so that hereafter said subsection shall be and read as follows:

A. Restrictions on fires; fireworks; amplified sound; the use of alcoholic beverages; dancing; sports; the use of animals, equipment or vehicles; the number of persons to be present; the location of any bandstand or stage; or any other activity which appears likely to create a risk of unreasonable harm to the public;

Further, Article XIII is hereby amended by the amendment of **Section 13.05**, Subsection (B), so that hereafter said subsection shall be and read as follows:

B. A requirement that the applicant carry a minimum of $500,000 per occurrence in commercial general liability insurance naming the City of Arlington, their officers,

agents, and employees as additional insured for claims occurring in City rights-of-way. The applicant shall also pay a reasonable deposit of Security or provide a bond for the repair of any damage to City of Arlington property, the cost of cleanup, or both when so determined by the City;

Further, Article XIII is hereby amended by the amendment of **Section 13.05**, Subsection (C), so that hereafter said subsection shall be and read as follows:

C. A requirement that the applicant pay a reasonable fee or provide a bond to defray the cost of furnishing adequate forces for security and traffic control by the Arlington Police Department at the proposed use or activity. The amount of fees or bonds are to be determined by the Police Department; and

Further, Article XIII is hereby amended by the amendment of **Section 13.06**, Denial of Permit; Grounds, Subsection (A)(3), so that hereafter said subsection shall be and read as follows:

3. The preparations specified in the application are insufficient to protect the community or the persons attending the event from health dangers or to avoid violations of V.T.C.A., Health and Safety Code, Section 341;

Further, Article XIII is hereby amended by the amendment of **Section 13.06**, by the deletion of Subsection (A)(10) and the addition of new Subsections (A)(10), (A)(11) and (A)(12), so that hereafter said subsections shall be and read as follows:

10. The proposed event would conflict with another event regulated by this article.

11. The applicant has failed to pay past fees associated with an Outdoor Festival.

12. The applicant has committed two or more violations of a provision of this article within the previous 14 months.

Further, Article XIII is hereby amended by the amendment of **Section 13.07**, Revocation of Permit, so that hereafter said section shall be and read as follows:

Section 13.07 Revocation of Permit

At any time the Building Official, or official of the Police, Fire, or Health Departments may, after notice to the promoter, revoke the permit on a finding that the preparations for the event will not be carried out as stated in the application or the conditions imposed by the permit will not be met.

Further, Article XIII is hereby amended by the amendment of **Section 13.09**, Permit Posting, so that hereafter said section shall be and read as follows:

Section 13.09 Permit Posting

Permits required by this Article shall be publicly posted in the area where the activity is conducted or produced and shall be exhibited upon demand to any law enforcement officer or City ordinance enforcement official. The posted permit shall have emergency contact information for the person(s) responsible for the operation of the event.

Further, Article XIII is hereby amended by the addition of **Section 13.11**, Penalty, so that hereafter said section shall be and read as follows:

Section 13.11 Penalty

Any person, firm, corporation, agent or employee thereof who violates any of the provisions of this ordinance shall be guilty of a misdemeanor and upon conviction thereof shall be fined an amount not to exceed **Two Thousand and No/100 Dollars ($2,000)** for each offense. Each day that a violation is permitted to exist shall constitute a separate offense.

2.

This ordinance shall be and is hereby declared to be cumulative of all other ordinances of the City of Arlington, and this ordinance shall not operate to repeal or affect any of such other ordinances except insofar as the provisions

thereof might be inconsistent or in conflict with the provisions of this ordinance, in which event such conflicting provisions, if any, in such other ordinance or ordinances are hereby repealed.

3.

If any section, subsection, sentence, clause or phrase of this ordinance is for any reason held to be unconstitutional, such holding shall not affect the validity of the remaining portions of this ordinance.

4.

All of the regulations provided in this ordinance are hereby declared to be governmental and for the health, safety and welfare of the general public. Any member of the City Council or any City official or employee charged with the enforcement of this ordinance, acting for the City of Arlington in the discharge of his/her duties, shall not thereby render himself/herself personally liable; and he/she is hereby relieved from all personal liability for any damage that might accrue to persons or property as a result of any act required or permitted in the discharge of his/her said duties.

5.

Any violation of this ordinance can be enjoined by a suit filed in the name of the City of Arlington in a court of competent jurisdiction, and this remedy shall be in addition to any penal provision in this ordinance or in the Code of the City of Arlington.

6.

The caption and penalty clause of this ordinance shall be published in a newspaper of general circulation in the City of Arlington, in compliance with the provisions of Article VII, Section 15, of the City Charter. Further, this ordinance may be published in pamphlet form and shall be admissible in such form in any court, as provided by law.

7.

This ordinance shall become effective ten (10) days after first publication as described above.

PRESENTED AND GIVEN FIRST READING on the 3rd day of November, **1998**, at a regular meeting of the City Council of

the City of Arlington, Texas; and GIVEN SECOND READING, passed and approved on the 11th day of November, **1998**, by a vote of 8 ayes and 0 nays at a regular meeting of the City Council of the City of **Arlington, Texas**.

ORDINANCE NO. 99-42

AN ORDINANCE AMENDING THE **"CONSTRUCTION"** CHAPTER OF THE CODE OF THE CITY OF ARLINGTON, TEXAS, 1987, THROUGH THE AMENDMENT OF **ARTICLE I**, ENTITLED BUILDING CODE, BY THE AMENDMENT OF **SECTION 1.04**, ENTITLED AMENDMENTS, ADDITIONS AND DELETIONS, BY THE ADDITION OF SUBSECTION (C)(57), AMENDING SECTION 1006.3.3.1 OF THE UNIFORM BUILDING CODE, 1997 EDITION; THROUGH THE REPEAL OF THE EXISTING **ARTICLE XVI** AND THE ADOPTION OF A NEW ARTICLE XVI, ENTITLED DANGEROUS BUILDINGS, ESTABLISHING PROCEDURES TO MEET THE REQUIREMENTS OF CURRENT ENABLING STATE LAW; BY THE ADDITION OF **ARTICLE XVII**, ENTITLED ADDITIONAL AUTHORITY TO SECURE BUILDING, ESTABLISHING PROCEDURES TO MEET THE REQUIREMENTS OF CURRENT ENABLING STATE LAW; BY THE ADDITION OF **ARTICLE XVIII**, ENTITLED PERFORMANCE OF WORK AND RECOVERY OF COST, TRANSFERRING SAID PROVISIONS OUT OF THE "UNIFORM HOUSING" CHAPTER AND INTO THIS "CONSTRUCTION" CHAPTER TO COMPLETE THE PROCEDURES IN CONFORMANCE WITH STATE LAW; PROVIDING FOR A FINE OF UP TO **$2,000** FOR EACH OFFENSE IN VIOLATION OF THE ORDINANCE; PROVIDING THIS ORDINANCE BE CUMULATIVE; PROVIDING FOR SEVERABILITY; PROVIDING FOR GOVERNMENTAL IMMUNITY; PROVIDING FOR INJUNCTIONS; PROVIDING FOR PUBLICATION AND BECOMING EFFECTIVE TEN DAYS AFTER FIRST PUBLICATION

BE IT ORDAINED BY THE CITY COUNCIL OF THE CITY OF ARLINGTON, TEXAS:

1.

That the **"Construction"** Chapter of the Code of the City of Arlington, Texas, 1987, is hereby amended through the amendment of Article I, Building Code, by the amendment of **Section 1.04**, Amendments, Additions and Deletions, by the addition of Subsection (C)(57), so that hereafter said subsection shall be and read as follows:

(57) The amendment of Section 1006.3.3.1; entitled General, to read as follows:

1006.3.3.1 General. Exterior exit stairways serving as a portion of the exist discharge in the means of egress system shall comply with the requirements of Section 1006.3.3. An exterior exit stairway serves as an exit discharge component in a means of egress system and is open on not less than two sides, except for required structural columns and open-type handrails and guardrails. The adjoining open areas shall be either yards, exit courts or public ways; the remaining sides may be enclosed by the exterior walls of the building. Any stairway not meeting the definition of an exterior stairway shall comply with the requirements for interior stairways.

Further, Article XVI, Dangerous Buildings, is hereby amended through the repeal of the existing Article XVI and the adoption of a new Article XVI, so that hereafter said Article shall be and read as follows:

ARTICLE XVI

DANGEROUS BUILDINGS

Section 16.01 Authority

This article is adopted pursuant to the authority provided by Chapter 214, Subchapter A, of the Local Government Code, entitled "Dangerous Structures", and any successor statutes.

Section 16.02 Building Official Defined

"Building Official", as used in this Article, shall mean the Director of Community Development or his designee.

Section 16.03 Dangerous Building Defined

A. Section 302 of the 1994 edition of the Uniform Code for the Abatement of Dangerous Buildings, as published by the International Conference of Building Officials, is

hereby adopted but modified and amended by the following, so that Section 302, entitled "Dangerous Buildings," shall read as follows:

Any building or structure which has defects or conditions described herein is a dangerous building, provided that such condition or defects exist to the extent that the life, health, property or safety of the public or its occupants are endangered:

1. When any door, aisle, passageway, stairway or other means of exit is not of sufficient width or size or is not so arranged as to provide safe and adequate means of exit in case of fire or panic;

2. When the walking surface of any aisle, passageway, stairway or other means of exit is warped, worn, loose, torn or otherwise unsafe so that it would not provide safe and adequate means of exit in case of fire or panic;

3. When the stress in any materials, member or portion thereof, due to all dead and live loads, is more than one and one half (1 1/2) times the working stress or stresses allowed in the Building Code for new buildings of similar structure, purpose or location;

4. When any portion has been damaged by fire, earthquake, wind, flood or by any other cause, to such an extent that the structural strength or stability thereof is materially less than it was before such catastrophe and is less than the minimum requirements of the Building Code for a newly constructed building of like area, height and occupancy;

5. When any portion or member or appurtenance is likely to fail, or to become detached or dislodged, or to collapse and thereby injure persons or damage property;

6. When any portion of the building, or when any member, appurtenance or ornamentation on its exterior is not of sufficient strength or stability, or is not anchored, attached or fastened in place so as to be capable of resisting a wind pressure of one half (1/2) of that specified in the Building Code for a newly constructed building of like area, height and

occupancy, without exceeding the working stresses permitted in the Building Code for such buildings;

7. When any portion has wracked, warped, buckled or settled to such an extent that walls or other structural portions have materially less resistance to winds or earthquakes than is required in the case of similar new construction;

8. When the building or any portion thereof is likely to partially or completely collapse because of:

   a. Dilapidation, deterioration or decay;

   b. Faulty construction;

   c. The removal, movement or instability of any portion of the ground necessary for the purpose of supporting such building;

   d. The deterioration, decay or inadequacy of its foundation; or

   e. Any other cause;

9. When, for any reason, the building or any portion thereof is manifestly unsafe for the purpose for which it is being used;

10. When the exterior walls or other vertical structural members list, lean or buckle to such an extent that a plumb line passing through the center of gravity does not fall inside the middle one third of the base;

11. When the building, exclusive of the foundation, shows thirty-three percent (33%) or more damage or deterioration of its supporting member or members, or fifty percent (50%) damage or deterioration of its nonsupporting members, enclosing or outside walls or coverings;

12. If the building was constructed or is maintained in violation of any specific requirement or prohibition applicable to such building provided by the Building Code, or of any law or ordinance of this state or City relating to the condition, location or structure of buildings;

13. If the building has in any nonsupporting part, member or portion less than fifty percent (50%), or in any supporting part, member or portion less than sixty-six percent (66%) of the strength, fire-resisting qualities or characteristics, or weather-resisting qualities or characteristics required by law for a newly constructed building of like area, height and occupancy;

14. If the building is used or intended to be used for dwelling purposes, and because of inadequate maintenance, dilapidation, decay, damage, faulty construction or arrangement, inadequate light, air or sanitation facilities, or otherwise, is determined by the Building Official or an authorized representative to be unsanitary, unfit for human habitation or in such a condition that is likely to cause sickness or disease;

15. If the building, because of obsolescence, dilapidated condition, deterioration, damage, inadequate exits, lack of sufficient fire-resistive construction, faulty electric wiring, gas connections or heating apparatus, or other cause, is determined by the Building Official or an authorized representative to be a fire hazard;

16. When any portion of an abandoned building or structure remains on a site after the demolition or destruction of the building or structure;

17. When the building or its curtilage contains accumulations of litter; refuse; garbage; rubbish; junk; animal carcasses; decaying flesh, fish, fowls or vegetables; stagnant water or other stagnant liquid; flammable liquids; slops; trash; or other deposits or substances, which are unwholesome, filthy, unsightly, offensive or unsanitary; likely to create or engender disease; likely to harbor insects or rodents; or likely to pollute storm water;

18. When a building which is partially constructed has not had any significant construction work done on it in the preceding six (6) months, and it is not secured by a fence or other means to prevent children and vagrants from entering the building; or

19. When a building which is partially constructed has not had any significant construction work done on it in the preceding six (6) months, and all building materials and construction equipment and tools have neither been removed from the construction site nor secured at the site to prevent their use by children; their theft; their deterioration; their vandalism; or their harborage of rodents or insects.

B. Any building or structure is a dangerous building when it is unsafe, unsanitary, substandard (as defined in Section 1001, of the "Uniform Housing" Chapter of the Code of the City of Arlington, Texas, 1987), unfit for human habitation, not provided with adequate egress, or which constitutes a fire hazard, otherwise dangerous to human life or which constitutes a hazard to the safety, health or welfare of the public or its occupants, for any reason or by reason of inadequate maintenance, dilapidation, obsolescence, or abandonment.

C. Any building or structure is a dangerous building, regardless of its structural condition,

1. When unoccupied by its owners, lessees, or other invitees and unsecured from unauthorized entry to the extent that it could be entered or used by vagrants or other uninvited persons as a place of harborage or could be entered or used by children, or

2. When boarded up, fenced or otherwise secured in any manner if the means used to secure the building or structure are inadequate to prevent unauthorized entry or use by vagrants or other uninvited persons as a place of harborage, or to prevent entry or use by children, or

3. When boarded up, fenced or otherwise secured in any manner if the building or structure constitutes a danger to the public even though secured from entry.

Section 16.04 <u>Commencement of Hearing</u>

A. **<u>Hearing</u>.** The Building Official may schedule a hearing before the Housing Advisory and Appeals Board (the "Board") to determine whether a building or structure is a dangerous building and, if so, whether it shall be

vacated, secured, repaired, removed, and/or demolished, or any occupants relocated.

B. **Scheduling of Hearing**. The Building Official may schedule the public hearing as follows:

1. When the Building Official has inspected or caused to be inspected any building or structure, other than an owner-occupied, single family dwelling, and has determined that such building is a dangerous building, he shall report this determination to the local historic preservation board for review of the building pursuant to § 214.00111, Texas Local Government Code, or any successor statute. After receipt of a written report from such board determining that the building may not be rehabilitated and designated as historic property, he may schedule a hearing before the Board; or

2. When the Building Official has inspected or caused to be inspected any owner-occupied, single family dwelling and has determined that such building is a dangerous building, he may schedule a hearing before the Board.

C. **Issuance of Notice**.

1. The Building Official shall issue a notice of hearing to each owner of the building and to each mortgagee and lienholder of the building and of the property on which it is located, as known by the city and as shown by search of the following records:

   a. Official Public Records of Real Property in Tarrant County, specifically in the Tarrant County Clerk's Office;

   b. Appraisal district records for the appraisal district in which the building is located;

   c. Records of the Texas Secretary of State;

   d. Assumed name records for Tarrant County;

   e. Tax records of the City of Arlington; and

   f. Utility records for the City of Arlington.

2. The Building Official shall issue notice of hearing to all unknown owners, if any, by posting the notice as described in Section 16.04(E)(1).

D. **Contents of Notice**. The notice shall contain:

1. The street address or legal description of the building;

2. A statement that the Building Official has found the building to be dangerous, and a brief description of the conditions found to render the building dangerous under the provisions of Section 16.03;

3. A statement specifying the date, time and place of the hearing; and

4. A statement that the owner, lienholder, or mortgagee will be afforded an opportunity to comment at the hearing and will be required to submit at the hearing proof of the scope of any work that may be required to comply with the minimum standards set out in city ordinance and the time it will take to reasonably perform the work.

E. **Service of Notice**.

1. Notice of the hearing shall be given by certified mail, return receipt requested, or by personal service. If the address of any person entitled to notice cannot be ascertained, or if service cannot be made by mail or in person after a reasonable attempt, and for all unknown owners, service shall be made by posting a copy of the notice on the front door of each improvement situated on the affected property or as close to the front door as practicable.

2. The notice shall be mailed and/or posted before the tenth (10th) day before the date of the hearing. Service by certified mail shall be effective on the date of mailing.

3. Proof of personal service shall be certified at the time of service by a written declaration executed by the person effecting service, declaring the date, time and manner in which service was made. The declaration, together with

any receipt card returned in acknowledgment of receipt by certified mail shall be affixed to the copy of the notice retained by the Building Official.

4. Notice of the hearing may be filed in the Official Public Records of Real Property in Tarrant County, specifically in the Tarrant County Clerk's Office. The notice shall contain:

   a. the name and address of the owner of the affected property if that information can be determined;

   b. a legal description of the affected property; and

   c. a description of the hearing.

   The filing of the notice is binding on subsequent grantees, lienholders, or other transferees of an interest in the property who acquire such interest after filing of the notice, and constitutes notice of the hearing on any subsequent recipient of any interest in the property who acquires such interest after the filing of the notice.

Section 16.05 <u>Conduct of Hearing</u>

A. **<u>Failure to Appear</u>**. If the owner of the building fails to appear at the hearing after being duly served, the Board shall conduct the hearing as if the owner personally appeared.

B. **<u>Subpoena Power</u>**. Witnesses may be subpoenaed in accordance with the procedures set forth in Article XI of the "Administration" Chapter.

C. **<u>Quorum</u>**. A majority of the members of the Board shall constitute a quorum for the purposes of holding a hearing, and an affirmative vote by three (3) members of the Board shall be required for the rendering of decisions or the issuance of orders authorized under this article.

D. **<u>Procedure</u>**. The Board shall be authorized to establish rules and regulations for the conduct of hearings, if such are consistent with this article and state law.

E. **Decisions and Orders**.

1. After all evidence has been presented at the hearing, the Board shall determine whether the building or structure is a dangerous building. If more than one (1) building is located on a property and is the subject of the hearing, the Board shall make a separate determination for each building.

2. The Board shall enter orders as set forth below:

   a. If the building or structure is declared a dangerous building under Section 16.03, except Subsections (A)(16), (A)(17), (A)(18) and (A)(19), the Board shall order the owner, at his option, to repair, remove or demolish the building. The Board shall specify a reasonable period of time for the owner to do so.

   b. If the building or structure is declared a dangerous building under Subsection 16.03(A)(16), the Board shall order the owner to remove or demolish the building, and shall specify a reasonable period of time for the owner to do so.

   c. If the building or structure is declared a dangerous building under Subsection 16.03(A)(17), the Board shall order the owner to remove the accumulated matter, and shall specify a reasonable period of time for the owner to do so.

   d. If the building or structure is declared a dangerous building under Subsection 16.03(A)(18), the Board shall order the owner, at his option, to secure, demolish or remove the building, and shall specify a reasonable period of time for the owner to do so.

   e. If the building or structure is declared a dangerous building under Subsection 16.03(A)(19), the Board shall order the owner, at his option, to secure or remove all building materials, equipment and tools, and shall specify a reasonable period of time for the owner to do so.

f. If the building or structure is declared a dangerous building under Section 16.03, the Board shall order the owner to secure the building, and shall specify a reasonable period of time for the owner to do so. If the owner fails to properly secure the building as ordered, the Building Official may secure the building under Article XVII of this code, assessing expenses and placing liens against the property as authorized by Section 16.09.

3. If necessary to protect the health, safety and welfare of the building's occupants, the Board shall order the building vacated. If the condition of the building is due to neglect or to intentional or negligent acts by the owner, the Board shall order the owner to relocate the occupants at his reasonable expense and in a reasonable manner. The Board shall specify a reasonable period of time for the completion of the relocation.

4. The Board shall also order an additional reasonable period of time for all mortgagees or lienholders to comply with the order should the owner fail to comply with the order within the time provided for action by the owner.

5. The Board shall also order a civil penalty that the City may assess if the owner fails to repair, remove or demolish the building in accordance with the Board's order. Such penalty shall not exceed the amount of One Thousand Dollars and No Cents ($1,000.00) per day that the building is out of compliance with the order.

6. A reasonable period of time to comply with an order of the Board is within thirty (30) days from the date of an order:

   a. to secure the building from unauthorized entry, or

   b. to repair, remove or demolish the building, unless the owner or lienholder or mortgagee establishes at the hearing that the work cannot reasonably be performed within thirty (30) days.

7. If the Board finds that the work cannot reasonably be performed within thirty (30) days to repair, remove or demolish the building, the Board shall order specific time schedules for the commencement and performance of the work and shall order the owner, lienholder, or mortgagee to secure the property in a reasonable manner from unauthorized entry while the work is being performed.

8. The Board shall not order the owner, lienholder, or mortgagee more than ninety (90) days to repair, remove, or demolish the building or fully perform all work required to comply with the order unless the owner, lienholder or mortgagee:

   a. submits a detailed plan and time schedule for the work at the hearing; and

   b. the Board finds that the work cannot reasonably be completed within ninety (90) days because of the scope and complexity of the work.

9. If the Board orders that the owner, lienholder or mortgagee complete any part of the work required to repair, remove or demolish the building within a time period that is more than ninety (90) days, the Board shall order that the owner, lienholder or mortgagee regularly submit progress reports to the Building Official and appear before the Board or the Board's designee to prove compliance with the time schedule.

Section 16.06 <u>Contents of Order</u>

A. An order issued by the Board shall be in writing and shall set forth the decisions of the Board made pursuant to Section 16.05(E).

B. An order to repair shall set forth those items that need to be repaired.

C. An order to vacate shall require the Building Official to post notice to vacate at or upon each entrance and exit of the building or structure in substantially the form described by Section 16.10.

D. An order shall also contain the following statement:

"It is further ORDERED that if the owner fails to comply with any part of this order by the specified dates, and if any of the mortgagees or lienholders fail to comply with the order in the owner's stead and by the specified dates, the City is hereby authorized at its discretion to vacate, secure, repair, remove and/or demolish the building(s) at its own expense. Alternatively, the City is authorized to assess a civil penalty on the owner in the amount of _____ ($_____) per day for each day that the building continues to be in violation of this order. Such costs or penalty shall accrue interest at a rate of ten percent (10%) per annum. The City shall have all remedies provided by law to recover such costs, penalties and interest, and shall be entitled to place a lien on the property unless it is a homestead protected by the Texas Constitution."

E. An order shall be signed by the chairperson or acting chairperson of the Board.

F. A copy of the order shall be sent promptly after the hearing by certified mail, return receipt requested, to the owner of the building and to any lienholder or mortgagee of the building. If a notice is mailed according to this subsection and the United States Postal Service returns the notice as "refused" or "unclaimed", the validity of the notice is not affected, and the notice shall be deemed as delivered.

G. Within ten (10) days after the date the order is issued:

1. a copy of the order shall be filed in the office of the City Secretary; and

2. a notice shall be published in a newspaper of general circulation in the City, said notice containing:

a. the street address or legal description of the property;

b. the date of the hearing;

c. a brief statement indicating the results of the order; and

d. instructions stating where a complete copy of the order may be obtained.

Section 16.07 <u>Failure to Comply With Order</u>

A. If the owner of a building declared dangerous fails to comply with an order of the Board within the allotted time, the Building Official shall cause a copy of the Board's order to be sent by certified mail return receipt requested to each lienholder and mortgagee as was determined pursuant to Section 16.04(C). This shall constitute notice to the lienholders and mortgagees that the owner has failed to comply with the order.

B. If the lienholders and mortgagees fail to comply with the order within the time allotted to them by the Board, the Building Official may:

1. Vacate, secure, repair, remove and/or demolish the building at the City's expense; or

2. Assess a civil penalty against the owner of the building, as provided by the Board, for failure to comply with the order.

C. The Building Official is authorized to repair a building only to the extent necessary to bring the building into compliance with minimum standards, and only if the building is a residential building with ten (10) or fewer units.

D. The Building Official is authorized, if the order requires demolition, to cause the building to be sold and demolished, or to be demolished and the materials, rubble and debris removed and the lot cleaned. Any such demolition work shall be accomplished, and the cost thereof paid and recovered in the manner provided in Article XVIII of this Chapter. Any surplus realized from the sale of any such building or from the demolition thereof over and above the cost of demolition and of cleaning the lot shall be paid to the person or persons lawfully entitled thereto.

E. The Building Official is further authorized to ask the City Attorney to bring suit against the owner in a

Tarrant County district court to request that a receiver be appointed to rehabilitate the property.

Section 16.08 <u>Liens</u>

A. If the City assesses a civil penalty pursuant to Section 16.07(B)(2), or if the City incurs expenses under Section 16.07(B)(1) or (C), or under Section 17.01, the City may assess the expenses or penalty on and place a lien against the land on which the building was located, unless the land is a homestead protected by the Texas Constitution.

B. A lien imposed pursuant to this article is a privileged lien subordinate only to tax liens and all previously recorded bona fide mortgage liens.

C. The lien arises and attaches to the property at the time the notice of the lien is recorded and indexed in the official public records of real property in Tarrant County, specifically in the office of the county clerk for Tarrant County. The notice shall contain the name and address of the owner if that information can be determined; a legal description of the land on which the building was located; the amount of expenses incurred by the City or the civil penalty and the balance due.

D. A lien is extinguished when the property owner or other person with an interest in the legal title to the land pays the City the balance due in full.

Section 16.09 <u>Notice and Collection of Penalty and Expenses</u>

A. If the City incurs expenses under Section 16.07(B)(1) or (C), or under Section 17.01, the Building Official shall cause a statement to be sent to the owner, setting forth the amount of the expenses and the interest accrued to date. The Building Official shall thereafter cause an annual statement to be sent to the owner until the expenses and interest are paid in full.

B. If the City assesses a civil penalty pursuant to Section 16.07(B)(2), the Building Official shall cause a notice to be sent to the owner that the City has begun assessing the penalty provided by the order. Thereafter, the Building Official shall cause a monthly statement to be sent to the owner, setting forth the

amount of the accrued penalty and interest, until the penalty and interest is paid in full.

C. A civil penalty or assessment for expenses shall accrue interest at the rate of ten percent (10%) per annum from the date of assessment until paid in full.

D. The City shall be entitled to all remedies provided by law for the collection of debt in order to recover penalty, expenses and interest. However, the City shall not be entitled to foreclose a lien for repair expenses if the property on which the repairs were made is occupied as a residential homestead by a person sixty-five (65) years of age or older.

Section 16.10 <u>Notice to Vacate; Violations</u>

A. Every notice to vacate shall be posted at or upon each entrance and exit of the building and shall be in substantially the following form:

DO NOT ENTER
UNSAFE TO OCCUPY

It is a misdemeanor to occupy this building,
or to remove or deface this notice.

Building Official
City of Arlington

The Notice to Vacate shall specify the conditions which necessitate the posting and recite the emergency or shall identify the order to vacate and state where a complete copy of the order may be obtained.

B. **<u>Compliance; Violations</u>**

No person shall remain in or enter any building which has been posted, except that entry may be made to repair, remove, demolish or secure such building under permit. No person shall remove or deface any such notice after it is posted until the required work has been completed and a Certificate of Occupancy is issued pursuant to the provisions of the Building Code. Any person violating this subsection shall be guilty of a misdemeanor punishable by a fine not to exceed Two Thousand Dollars and No Cents ($2,000.00).

Section 16.11 **Other Enforcement**

A. An owner who fails to comply with an order of the Board shall be guilty of a misdemeanor punishable by a fine not to exceed Two Thousand Dollars and No Cents ($2,000.00).

B. Each day that a violation continues shall constitute a separate offense.

C. A criminal prosecution shall be in addition to any civil remedies to which the City is entitled. The remedies provided by this article shall be in addition to the remedies provided by this chapter or any other applicable ordinance or statute.

D. No person shall obstruct, impede or interfere with any officer, employee, contractor or authorized representative of the City or with any person who owns or holds an estate or interest in any building or structure which has been ordered repaired, removed, secured, vacated or demolished under the provisions of this Code, or with any person to whom such building has been lawfully sold, whenever such officer, employee, contractor or authorized representative of the City, person having an interest or estate in such building or structure, or purchaser is engaged in the work as ordered or in performing any necessary act preliminary to or incidental to such work. A person who obstructs, impedes or interferes with an order of the Board shall be guilty of a misdemeanor punishable by a fine not to exceed Two Thousand Dollars and No Cents ($2,000.00).

Further, the **"Construction"** Chapter of the Code of the City of Arlington, Texas, 1987, is hereby amended through the addition of **Article XVII**, Additional Authority to Secure Building, so that hereafter said article shall be and read as follows:

ARTICLE XVII

ADDITIONAL AUTHORITY TO SECURE BUILDING

Section 17.01 **Authority to Secure Building**

The Building Official may secure or cause to be secured a building at the City's expense if the Building Official determines:

1. That the building or structure violates the minimum standards for the use and occupancy of buildings in the City regardless of the date of their construction, and

2. That the building or structure is unoccupied or is occupied only by persons who do not have a right of possession to the building.

Section 17.02 <u>Issuance of Notice</u>

Before the eleventh (11th) day after the date the building is secured pursuant to Section 17.01, the Building Official will give notice to the owner that the building has been secured. The Building Official may also give notice to each mortgagee and lienholder, and to any unknown owners, in the same manner as described by Section 16.04(C).

Section 17.03 <u>Contents of Notice</u>

The notice will contain:

1. An identification of the building and the property on which it is located; and

2. A description of the violation of the ordinance that is present at the building; and

3. A statement that the City has secured the building; and

4. A statement explaining the owner's right to request a hearing about any matter relating to the City's securing of the building.

Section 17.04 <u>Service of Notice</u>

Notice regarding the securing of the building shall be given by either:

1. personally serving the owner with written notice; or

2. depositing the notice in the United States mail addressed to the owner at the owner's post office address; or

3. if personal service cannot be obtained and the owner's post office address is unknown;

   a. publishing the notice at least twice within a ten (10) day period in the official newspaper of the City; or

   b. posting the notice on or near the front door of the building.

Section 17.05 <u>Hearing</u>

If, within thirty (30) days after the date a building is secured pursuant to Section 17.01, the owner files with the Building Official a written request for a hearing, the Building Official will schedule a hearing before the Board to determine whether the actions of the Building Official to secure the building are upheld, modified or reversed in the same manner as provided by Section 1101(f) & (g) of the "Uniform Housing" Chapter of the Code of the City of Arlington, Texas. At the hearing the owner may testify or present witnesses or written information about any matter relating to the City's securing of the building.

Section 17.06 <u>Scheduling of Hearing</u>

The Board will conduct the hearing within twenty (20) days after the date the request is filed.

Section 17.07 <u>Notice of Hearing</u>

Notice of the hearing shall be provided to the requestor by personal service or certified mail, return receipt requested, before the 10th day before the hearing, in the same manner as provided in Section 16.04(E)(2) and (3).

Section 17.08 <u>Procedure After Hearing</u>

After the hearing before the Board, or the expiration of the time allowed for the owner to request a hearing and no hearing has been requested, the Building Official will mail by certified mail, return receipt requested, a copy of the order to the owner of the building and to any lienholder or mortgagee of the building. Within ten (10) days after

the date the order from the Board is issued, the Building Official will:

1. File a copy of the order in the office of the City Secretary; and

2. Publish in the City's official newspaper a notice containing:

   a. the street address or legal description of the property;

   b. the date of the hearing;

   c. a brief statement indicating the results of the hearing or order; and

   d. instructions stating where a complete copy of the order may be obtained.

Section 17.09 Liens and Collection of Expenses

If the City incurs expenses under Section 17.01, the City may assess the expenses on and place a lien against the land on which the building is located, in the same manner as provided by Sections 16.08 and 16.09.

Further, the **"Construction"** Chapter of the Code of the City of Arlington, Texas, 1987, is hereby amended through the addition of **Article XVIII**, Performance of Work and Recovery of Cost, so that hereafter said article shall be and read as follows:

ARTICLE XVIII

PERFORMANCE OF WORK AND RECOVERY OF COST

Section 18.01 General

A. **Procedure.** When any work to repair, remove, secure, vacate, or demolish is to be done pursuant to this code, the Building Official shall cause the work to be accomplished by City personnel or by private contract under the direction of the Building Official, or he may employ such architectural and engineering assistance on a contract basis as he may deem reasonably necessary.

B. **Costs.** The cost of such work shall be paid from the Repair and Demolition Fund, and may be made a special assessment against the property involved.

Section 18.02 Repair and Demolition Fund

A. **General.** The legislative body of this jurisdiction shall establish a special revolving fund to be designated as the Repair and Demolition Fund. Payments shall be made out of said fund upon the demand of the Building Official to defray the costs and expenses which may be incurred by this jurisdiction in doing or causing to be done the necessary work to repair, remove, secure, vacate or demolish dangerous buildings.

B. **Maintenance of Fund.** The legislative body may at any time transfer to the Repair and Demolition Fund, out of any money in the General Fund of the City, such sums as it may deem necessary in order to expedite the performance of the work of demolition, and any sum so transferred shall be deemed a loan to the Repair and Demolition Fund and shall be repaid out of the proceeds of the collections hereinafter provided for. All funds collected under the proceedings hereinafter provided for shall be paid to the treasurer of this jurisdiction, who shall credit the same to the Repair and Demolition Fund.

Section 18.03 Account of Expense, Filing of Report: Contents

The Building Official shall keep an itemized account of the expense incurred by this jurisdiction for the work to repair, remove, secure, vacate or to demolish any building pursuant to the provisions of this code. Upon the completion of the work, said Building Official shall prepare and file with the clerk of this jurisdiction a report specifying the work done, the itemized and total cost of the work, a description of the real property upon which the building or structure is or was located and the names and addresses of the persons entitled to notice.

Section 18.04 Report Transmitted to Council - Set for Hearing

Upon receipt of said report, the clerk of this jurisdiction shall present it to the legislative body of

this jurisdiction for consideration. The legislative body of this jurisdiction shall fix a time, date and place for hearing said report, and any protests or objections thereto. The clerk of this jurisdiction shall cause notice of said hearing to be posted upon the property involved, published once in a newspaper of general circulation in the City and served by certified mail, postage prepaid, addressed to the owner of the property as his name and address appear on the last equalized assessment roll of the county, if such so appear, or as known to the clerk. Such notice shall be given at least ten (10) days prior to the date set for hearing and shall specify the day, hour and place when the legislative body will hear and pass upon the Building Official's report, together with any objections or protests which may be filed as hereinafter provided by any person interested in or affected by the proposed charge.

Section 18.05. <u>Protests and Objections - How Made</u>

Any person interested in or affected by the proposed charge may file written protests or objections with the clerk of this jurisdiction at any time prior to the time set for the hearing on the report of the Building Official. Each such protest or objection must contain a description of the property in which the signer thereof is interested and the grounds of each such protest or objection. The clerk of this jurisdiction shall endorse on every such protest or objection the date it was received. He shall present such protests or objections to the legislative body of this jurisdiction at the time set for the hearing, and no other protests or objections shall be considered.

Section 18.06 <u>Hearing of Protests</u>

Upon the day and hour fixed for the hearing, the legislative body of this jurisdiction shall hear and pass upon the report of the Building Official together with any such objections or protests. The legislative body may make such revision, correction or modification in the report or the charge as it may deem just; and when the legislative body is satisfied with the correctness of the charge, the report (as submitted or as revised, corrected or modified) together with the charge, shall be confirmed or rejected. The decision of the legislative body of this jurisdiction, on the report and the charge and on all protests or objections, shall be final and conclusive, subject to judicial appeal.

Section 18.07 **Special Assessment**

A. **General.** The legislative body of this jurisdiction may thereupon assess said charge against the property involved.

B. **Special Assessment.** If the legislative body of this jurisdiction orders that the charge shall be assessed against the property, it shall confirm the assessment, cause the same to be recorded on the assessment roll and thereafter, said assessment shall constitute a special assessment against and a lien upon the property.

Section 18.08 **Contest**

The validity of any assessment made under the provisions of this Article shall not be contested in any action or proceeding unless the same is commenced within thirty (30) days after the assessment is placed upon the assessment roll as provided herein. Any appeal from a final judgment in such action or proceeding must be perfected within thirty (30) days after the entry of such judgment.

Section 18.09 **Authority for Installation Payment of Assessments with Interest**

The legislative body of this jurisdiction, in its discretion, may determine that assessments in amounts of $500.00 or more shall be payable in not to exceed five (5) equal annual installments. The legislative body's determination to allow payment of such assessments in installments, the number of installments, whether they shall bear interest and the rate thereof shall be by a resolution adopted prior to the confirmation of the assessment.

Section 18.10 **Lien of Assessment**

A. **Priority.** Immediately upon its being placed on the assessment roll, the assessment shall be deemed to be complete, the several amounts assessed shall be payable, and the assessments shall be liens against the lots or parcels of land assessed, respectively. The lien shall be subordinate to all existing special assessment liens previously imposed upon the same property and shall be paramount to all other liens except for state, county and municipal taxes, with

which it shall be upon a parity. The lien shall continue until the assessment and all interest due and payable thereon are paid.

B. **Interest.** All such assessments remaining unpaid after thirty (30) days from the date of recording on the assessment roll shall become delinquent and shall bear interest at the rate of ten percent (10%) per annum from and after said date.

Section 18.11 Report to Assessor and Tax Collector: Addition of Assessment to Tax Bill

After confirmation of the report, certified copies of the assessment shall be given to the Assessor of this jurisdiction and the Tax Collector of this jurisdiction, who shall add the amount of the assessment to the next regular tax bill levied against the parcel for municipal purposes.

Section 18.12 Filing Copy of Report with County Auditor

If the County Assessor and the County Tax Collector assess property and collect taxes for the City, a certified copy of the assessment shall be filed with the County Auditor on or before August 10th. The descriptions of the parcels reported shall be those used for the same parcels on the County Assessor's map books for the current year.

Section 18.13 Collections of Assessment: Penalties for Foreclosure

The amount of the assessment shall be collected at the same time and in the same manner as ordinary property taxes are collected and shall be subject to the same penalties and procedure and sale in case of delinquency as provided for ordinary property taxes. All laws applicable to the levy, collection and enforcement of property taxes shall be applicable to such assessment.

If the legislative body of this jurisdiction has determined that the assessment shall be paid in installments, each installment and any interest thereon shall be collected in the same manner as ordinary property taxes in successive years. If any installment is delinquent, the amount thereof is subject to the same penalties and procedure for sale as provided for ordinary property taxes.

Section 18.14 **<u>Repayment of Repair and Demolition Fund</u>**

All money recovered by payment of the charge or assessment or from the sale of the property at foreclosure sale shall be paid to the Treasurer of this jurisdiction who shall credit the same to the Repair and Demolition Fund.

2.

Any person, firm, corporation, agent or employee thereof who violates any of the provisions of this ordinance shall be guilty of a misdemeanor and upon conviction thereof shall be fined an amount not to exceed **Two Thousand and No/100 Dollars ($2,000)** for each offense. Each day that a violation is permitted to exist shall constitute a separate offense.

3.

This ordinance shall be and is hereby declared to be cumulative of all other ordinances of the City of Arlington, and this ordinance shall not operate to repeal or affect any of such other ordinances except insofar as the provisions thereof might be inconsistent or in conflict with the provisions of this ordinance, in which event such conflicting provisions, if any, in such other ordinance or ordinances are hereby repealed.

4.

If any section, subsection, sentence, clause or phrase of this ordinance is for any reason held to be unconstitutional, such holding shall not affect the validity of the remaining portions of this ordinance.

5.

All of the regulations provided in this ordinance are hereby declared to be governmental and for the health, safety and welfare of the general public. Any member of the City Council or any City official or employee charged with the enforcement of this ordinance, acting for the City of Arlington in the discharge of his/her duties, shall not thereby render himself/herself personally liable; and he/she is hereby relieved from all personal liability for any damage that might accrue to persons or property as a result of any act required or permitted in the discharge of his/her said duties.

6.

Any violation of this ordinance can be enjoined by a suit filed in the name of the City of Arlington in a court

of competent jurisdiction, and this remedy shall be in addition to any penal provision in this ordinance or in the Code of the City of Arlington.

7.

The caption and penalty clause of this ordinance shall be published in a newspaper of general circulation in the City of Arlington, in compliance with the provisions of Article VII, Section 15, of the City Charter. Further, this ordinance may be published in pamphlet form and shall be admissible in such form in any court, as provided by law.

8.

This ordinance shall become effective ten (10) days after first publication as described above.

PRESENTED AND GIVEN FIRST READING on the 16th day of March, **1999**, at a regular meeting of the City Council of the City of Arlington, Texas; and GIVEN SECOND READING, passed and approved on the 23rd day of March, **1999**, by a vote of 9 ayes and 0 nays at a regular meeting of the City Council of the City of **Arlington, Texas**.

ORDINANCE NO. 00-105

AN ORDINANCE AMENDING THE **"CONSTRUCTION"** CHAPTER OF THE CODE OF THE CITY OF ARLINGTON, TEXAS, 1987, THROUGH THE AMENDMENT OF **ARTICLE IV**, ENTITLED REGISTRATION, PERMITS AND INSPECTIONS, BY THE ADDITION OF **SECTION 4.16**, PERMITS FOR DEMOLITION OR RELOCATION, TO CLARIFY THE PROCESS INVOLVED IN OBTAINING A PERMIT FOR THE DEMOLITION OR RELOCATION OF BUILDINGS OR STRUCTURES THAT ARE FIFTY (50) YEARS OLD OR OLDER, OR LOCATED IN A LANDMARK PRESERVATION ("LP") OVERLAY ZONING DISTRICT; PROVIDING FOR A FINE OF UP TO $2,000 FOR EACH OFFENSE IN VIOLATION OF THE ORDINANCE; PROVIDING THIS ORDINANCE BE CUMULATIVE; PROVIDING FOR SEVERABILITY; PROVIDING FOR GOVERNMENTAL IMMUNITY; PROVIDING FOR INJUNCTIONS; PROVIDING FOR PUBLICATION AND BECOMING EFFECTIVE TEN DAYS AFTER FIRST PUBLICATION

BE IT ORDAINED BY THE CITY COUNCIL OF THE CITY OF ARLINGTON, TEXAS:

1.

That the **"Construction"** Chapter of the Code of the City of Arlington, Texas, 1987, is hereby amended through the amendment of **Article IV**, Registration, Permits and Inspections, by the addition of **Section 4.16**, Permits for Demolition or Relocation, so that hereafter the section shall be and read as follows:

Section 4.16 Permits for Demolition or Relocation

Upon receiving an application for a permit to demolish or relocate a building or structure from a person or entity other than a State, City, County or Federal government fee simple owner, the Building Official shall determine whether the building or structure is fifty (50) years old or older, or is situated in a Landmark Preservation Overlay ("LP") Zoning District. If the building or structure is fifty (50) years old or older, or the age of the building cannot be ascertained, the Building Official shall notify the

applicant of such fact, and follow the procedures set out in Subsection A, below.

If the building or structure is situated in a "LP" Overlay District the Building Official shall notify the applicant of such fact, and follow the procedures set out in Subsection B, below. If the building or structure is less than fifty (50) years old and is not zoned with a "LP" Overlay suffix, the Building Official shall issue a demolition permit if all other requirements of the Code are met.

A. Buildings or Structures that are Fifty (50) Years Old or Older, and Buildings or Structures of Unknown Age

If the building or structure is fifty (50) years old or older, or the age of the building cannot be ascertained, the Building Official shall inform the applicant that the Landmark Preservation Commission or City Council must issue a Certificate of Demolition or Relocation before the Building Official may issue the requested permit. The Building Official shall direct the applicant to complete an Application for a Certificate of Demolition and Relocation for filing with the Landmark Preservation Commission, and forward the application to the Landmark Preservation Commission for its review and consideration.

1. Automatic Stay of Thirty (30) Days. Demolition or relocation of the building or structure shall be automatically stayed for a period of up to thirty (30) days from the date of application to allow the Landmark Preservation Commission an opportunity to determine whether the building or structure is historically significant.

   a. If the building or structure is determined to be historically significant the Landmark Preservation Commission shall provide proper notice and hold a public hearing on the permit application.

   b. If the building or structure is determined not to be historically significant the Landmark Preservation Commission shall so notify the applicant and the Building Official as soon as is reasonably practicable.

2. Public Hearing. Within thirty (30) days of the receipt of a completed application for a Certificate of Demolition or Relocation, the Landmark Preservation Commission shall hold a public hearing. Public notice of such hearing setting forth the date, time and place scheduled for such hearing and the purpose thereof shall be published in a newspaper one time at least seven (7) days prior to the date scheduled for such hearing.

3. Certificate Deemed Issued by Lack of Action. If the Landmark Preservation Commission takes no action within thirty (30) days of receipt of the completed application, a Certificate of Demolition or Relocation shall be deemed issued by the Landmark Preservation Commission.

4. Review. In evaluating a request for a Certificate of Demolition or Relocation, the Landmark Preservation Commission shall consider the following:

   a. the architectural, cultural, or historical significance of the building or structure;

   b. the age of the building or structure;

   c. the state of repair of the building or structure in question, and the reasonableness of the cost of restoration and repair;

   d. additions, alterations, changes, modifications and updates to the exterior architectural features of the building or structure that would disqualify it from consideration for registration on the National Register of Historic Places;

   e. the impact, if any, that delaying the demolition or relocation of the building or structure will have;

   f. the contribution, if any, the building or structure makes to a previously designated and recognized historic district and the owner's or any predecessor owner's involvement in the formation or creation of such a district;

g. the willingness of the applicant to donate or sell the building or structure to a third party;

h. the potential usefulness or adaptive reuse of the building or structure, including economic usefulness;

i. the potential market or demand for such a building or structure in its current condition and location;

j. the purpose that would be served in preserving the building or structure; and,

k. all other factors it finds necessary and appropriate to carry out the intent of this ordinance.

5. Demolition or Relocation Appropriate. If the Landmark Preservation Commission determines that the building or structure should be demolished or removed, the Building Official shall issue a demolition permit if all other requirements of the Code are met.

6. Demolition or Relocation Inappropriate. If the Landmark Preservation Commission determines that the building or structure should not be demolished, the Landmark Preservation Commission may extend the automatic stay for a period of up to thirty (30) additional days. The automatic stay and any additional stay imposed by the Landmark Preservation Commission shall not exceed a total of sixty (60) days from the date application for a permit to demolish or relocate a building or structure was filed.

7. Stay Extended by City Council. Prior to the expiration of the stay period imposed by the Landmark Preservation Commission, the Landmark Preservation Commission may issue a recommendation to the City Council requesting that the stay be extended for an additional thirty (30) day period. If after notice to the applicant and a public hearing, the City Council determines that there are reasonable grounds for preservation as well as a reasonable expectation of preserving the building or structure the City Council may extend

the stay for an additional period of up to thirty (30) days.

Prior to the expiration of the stay period imposed by the City Council, the Landmark Preservation Commission shall report to City Council concerning its efforts to preserve the building or structure and may request another extension of the stay for one final thirty (30) day period. The City Council may in its discretion extend the stay for one final thirty (30) day period.

In no event shall the stay on a demolition permit exceed a total of one hundred twenty (120) days from the date the application for a permit to demolish or relocate a building or structure was filed. If City Council takes no action on the Landmark Preservation Commission's request for an extension within the original stay period or any subsequent extension thereof, a Certificate of Demolition or Relocation shall be deemed issued at the expiration of such stay period.

8. Appeals. Appeals from a decision of the Landmark Preservation Commission shall be to the City Council. Such appeals must be filed with the Historic Preservation Officer within ten (10) days after the complained of decision is made by the Landmark Commission. Such appeals shall be heard by City Council on the next available agenda consistent with the requirements of the Texas Open Meetings Act and with due consideration for the City Council's schedule of business.

9. Permit Issuance. At the end of the stay period and any extension thereof, or upon the City Council's granting an appeal to the Landmark Preservation Commission's determination the Building Official shall issue a demolition permit if all other requirements of the Code are met.

B. Buildings or Structures in a Landmark Preservation Overlay ("LP") Zoning District

If the building or structure is situated in a "LP" Overlay District the Building Official shall inform the applicant that the Landmark Preservation Commission or City Council must issue a Certificate of Demolition or Relocation before the Building Official may issue the requested permit. The Building Official shall direct

the applicant to complete an Application for a Certificate of Demolition and Relocation for filing with the Landmark Preservation Commission, and forward the application to the Landmark Preservation Commission for its review and consideration.

The Landmark Preservation Commission or City Council must issue a Certificate of Demolition or Relocation before the Building Official may issue a permit to demolish or relocate a building or structure situated in a "LP" Overlay District. The Certificate of Demolition or Relocation process, which must be followed, is set out in Section 9-600 of the Zoning Chapter of the Code of the City of Arlington, Texas. In addition to obtaining a Certificate of Demolition or Relocation from the Landmark Preservation Commission or City Council the applicant must meet all other requirements of the Code before the Building Official shall issue a demolition permit.

C. <u>Buildings or Structures that are NOT Located in a Landmark Preservation Overlay ("LP") Zoning District and which are Less Than Fifty (50) Years Old</u>

If the age of a building or structure can be ascertained and the building is less than fifty (50) years old and the building or structure is not zoned with a "LP" Overlay suffix the Building Official shall issue a demolition permit if all other requirements of the Code are met.

2.

Any person, firm, corporation, agent or employee thereof who violates any of the provisions of this ordinance shall be guilty of a misdemeanor and upon conviction thereof shall be fined an amount not to exceed Two Thousand and No/100 Dollars ($2,000) for each offense. Each day that a violation is permitted to exist shall constitute a separate offense.

3.

This ordinance shall be and is hereby declared to be cumulative of all other ordinances of the City of Arlington, and this ordinance shall not operate to repeal or affect any of such other ordinances except insofar as the provisions thereof might be inconsistent or in conflict with the provisions of this ordinance, in which event such conflicting

provisions, if any, in such other ordinance or ordinances are hereby repealed.

4.

If any section, subsection, sentence, clause or phrase of this ordinance is for any reason held to be unconstitutional, such holding shall not affect the validity of the remaining portions of this ordinance.

5.

All of the regulations provided in this ordinance are hereby declared to be governmental and for the health, safety and welfare of the general public. Any member of the City Council or any City official or employee charged with the enforcement of this ordinance, acting for the City of Arlington in the discharge of his/her duties, shall not thereby render himself/herself personally liable; and he/she is hereby relieved from all personal liability for any damage that might accrue to persons or property as a result of any act required or permitted in the discharge of his/her said duties.

6.

Any violation of this ordinance can be enjoined by a suit filed in the name of the City of Arlington in a court of competent jurisdiction, and this remedy shall be in addition to any penal provision in this ordinance or in the Code of the City of Arlington.

7.

The caption and penalty clause of this ordinance shall be published in a newspaper of general circulation in the City of Arlington, in compliance with the provisions of Article VII, Section 15, of the City Charter. Further, this ordinance may be published in pamphlet form and shall be admissible in such form in any court, as provided by law.

8.

This ordinance shall become effective ten (10) days after first publication as described above.

PRESENTED AND GIVEN FIRST READING on the 5th day of September, **2000**, at a regular meeting of the City Council of the City of Arlington, Texas; and GIVEN SECOND READING,

passed and approved on the 12th day of September, **2000**, by a vote of 9 ayes and 0 nays at a regular meeting of the City Council of the City of **Arlington, Texas**.

ORDINANCE NO. 02-020

AN ORDINANCE AMENDING THE **"CONSTRUCTION"** CHAPTER OF THE CODE OF THE CITY OF ARLINGTON, TEXAS, 1987, THROUGH THE REPEAL OF THE EXISTING ARTICLE I AND THE ADOPTION OF A NEW **ARTICLE I**, ENTITLED BUILDING CODE, RELATIVE TO THE ADOPTION OF THE 2000 INTERNATIONAL CODES INCLUDING THE 2000 INTERNATIONAL BUILDING CODE (I.B.C.), THE 2000 INTERNATIONAL RESIDENTIAL CODE (I.R.C.) AND THE 2000 INTERNATIONAL ENERGY CONSERVATION CODE (I.E.C.C.); THROUGH THE AMENDMENT OF **ARTICLE IV**, ENTITLED REGISTRATION, PERMITS AND INSPECTIONS, BY THE AMENDMENT OF **SECTION 4.01**, REGISTRATION, SUBSECTIONS (F)(1) AND (G)(4), RELATIVE TO REVISING THE CODE FROM U.B.C. TO I.B.C. AND I.R.C.; BY THE AMENDMENT OF **SECTION 4.13**, REFUNDS, SUBSECTION (D), RELATIVE TO REVISING THE CODE FROM U.B.C. TO I.B.C. AND ADDING A REFERENCE TO I.R.C.; BY THE AMENDMENT OF **SECTION 4.14**, CERTIFICATE OF OCCUPANCY, SUBSECTION (B), RELATIVE TO REVISING THE CODE FROM U.B.C. TO I.B.C.; THROUGH THE AMENDMENT OF **ARTICLE VII**, ENTITLED SIGNS, BY THE AMENDMENT OF **SECTION 7.07**, STRUCTURAL REQUIREMENTS, RELATIVE TO REVISING THE CODE FROM U.B.C. TO I.B.C.; BY THE AMENDMENT OF **SECTION 7.08**, USE OF PLASTIC MATERIALS, RELATIVE TO REQUIREMENTS FOR PLASTIC MATERIALS; THROUGH THE AMENDMENT OF **ARTICLE IX**, ENTITLED FENCES, BY THE AMENDMENT OF **SECTION 9.02**, ENCLOSURE OF SWIMMING POOLS, SPAS AND HOT TUBS, SUBSECTIONS (E) and (G)(2), RELATIVE TO REVISING THE APPENDIX REFERENCES; THROUGH THE AMENDMENT OF **ARTICLE XIII**, OUTDOOR FESTIVALS, BY THE AMENDMENT OF **SECTION 13.04**, REPORTS, SUBSECTION (B), RELATIVE TO UPDATING THE REFERENCE TO THE HEALTH AND SAFETY CODE; PROVIDING FOR A FINE OF UP TO $2000 FOR EACH OFFENSE IN VIOLATION OF THE ORDINANCE; PROVIDING THIS ORDINANCE BE CUMULATIVE; PROVIDING FOR SEVERABILITY; PROVIDING FOR GOVERNMENTAL IMMUNITY; PROVIDING FOR INJUNCTIONS; PROVIDING FOR PUBLICATION AND BECOMING EFFECTIVE TEN DAYS AFTER FIRST PUBLICATION EXCEPT THAT THE I.E.C.C. AND

CHAPTER 11 OF THE I.R.C. SHALL BECOME EFFECTIVE SEPTEMBER 1, 2002

BE IT ORDAINED BY THE CITY COUNCIL OF THE CITY OF ARLINGTON, TEXAS:

1.

That the **"Construction"** Chapter of the Code of the City of Arlington, Texas, 1987, is hereby amended through the repeal of the existing Article I, and the adoption of a new **Article I**, entitled Building Code, so that hereafter said Article shall be and read as follows:

ARTICLE I

BUILDING CODE

Section 1.01 Title

This Chapter shall be known as the "Building Code" of the City of Arlington.

Section 1.02 Adoption of Code

The International Building Code, 2000 Edition (hereinafter called "I.B.C."); the International Residential Code, 2000 Edition (hereinafter called "I.R.C."); and the International Energy Conservation Code, 2000 Edition (hereinafter called "I.E.C.C."); as published by the International Code Council, Inc. are hereby adopted and designated, together with the deletions, amendments and addenda hereinafter contained, as the Building Code of the City of Arlington, the same as though said I.B.C., I.R.C. and I.E.C.C. were copied at length herein. Copies of the I.B.C., I.R.C. and I.E.C.C. and its Appendices shall be kept on file in the Office of the City Secretary.

Section 1.03 Code Defined; Rule of Construction

This Building Code shall include all of the provisions of the I.B.C., I.R.C. and I.E.C.C. as adopted by Section 1.02 above and all other provisions contained herein. In the event a conflict is determined to exist between said I.B.C., I.R.C. and I.E.C.C. as adopted and the other provisions of this Chapter, the latter provisions shall be construed as controlling and taking precedence over the former.

Section 1.04 Amendments, Additions and Deletions

The adoption of the I.B.C., I.R.C. and I.E.C.C., as provided in Section 1.02 above, is modified and amended by the following:

A. The addition thereto of Articles II, et seq., of this Chapter.

B. The deletion in the entirety of the following provisions of the I.B.C. and I.R.C.:

(1) Section 105 I.B.C. and R105 I.R.C., entitled Permits;
(2) Section 108 I.B.C. and R108 I.R.C., entitled Fees;
(3) Section 109 I.B.C. and R109 I.R.C., entitled Inspections; and
(4) Section 110 I.B.C. and R110 I.R.C., entitled Certificate of Occupancy.
(5) Section 112 I.B.C. and R112 I.R.C., entitled Board of Appeals;
(6) Section 113 I.B.C. and R113 I.R.C., entitled Violations;
(7) Section 115 I.B.C., entitled Unsafe Structures and Equipment;
(8) Section 2503 I.B.C., entitled Inspection;
(9) Chapters 33 through 42 I.R.C.

C. The amendment of the following I.B.C. provisions:

(1) The amendment of Section 101.2, entitled Scope, by the addition of the following "EXCEPTION":

EXCEPTION: Storage buildings not exceeding three hundred twenty (320) square feet in area shall not be subject to the provisions of this Building Code provided:

(a) The building shall not be intended or used for human occupancy;

(b) Any mechanical, electrical or plumbing work shall be installed in full compliance with the appropriate Chapter of the Code of the City of Arlington for such work;

(c) A building on commercial property shall be anchored at each corner: said anchorage shall equal or exceed a concrete pier ten inches (10") in diameter and eighteen inches (18") in depth embedded with a standard one-half inch (½") diameter anchor bolt;

(d) The building shall be not closer than five feet (5') to a property line in residential areas and ten feet (10') to a property line in non-residential areas: subject, however, to any more restrictive setbacks contained in the "Zoning" Chapter of the Code of the City of Arlington: further, storage buildings on commercial property shall be separated from other structures and property lines as specified by I.B.C., Chapter 5;

(e) The building shall be maintained in good repair;

(f) There shall be not more than one (1) such building on any property occupied for other than residential use; and

(g) A permit for such building shall have been obtained from the Building Official.

(2) The amendment of Section 101.4, entitled Referenced Codes., to read as follows:

101.4 Referenced Codes. The other codes listed in Sections 101.4 through 101.4.7 and referenced elsewhere in this code, when specifically adopted, shall be considered part of the requirements of this code to the prescribed extent of each such reference. Whenever amendments have been adopted to the referenced codes and standards, each reference to said code and standard shall be considered to reference the amendments as well. Any reference to NFPA 70 or the ICC Electrical Code shall mean the Electrical Code as adopted.

(3) The amendment of Section 103.1, entitled Creation of Enforcement Agency., to read as follows:

103.1 Creation of enforcement agency. The Building Inspections Division is hereby created and the official in charge there of shall be known as the Building Official.

(4) The amendment of Section 104.6, entitled Right of Entry, to read as follows:

Whenever necessary to make an inspection to enforce any of the provisions of this Building Code, or whenever the Building Official or an authorized representative has reasonable cause to believe that there exists in any building or upon any premises any condition or violation which makes such building or premises unsafe, dangerous

or hazardous, the Building Official or an authorized representative may enter such building or premises at all reasonable times to inspect the same or to perform any duty imposed upon said Building Official by this Building Code. If such building or premises be occupied, the Building Official shall first present proper credentials and request entry. If such building or premises be unoccupied, the Building Official shall first make a reasonable effort to locate the owner or other person having charge or control of the building or premises and request entry. If such entry is refused, or, if no owner or other person having charge or control of the building or premises can be located, the Building Official or an authorized representative shall have recourse to every remedy provided by law to secure entry.

(5) The addition of Section 104.12, entitled Occupancy Violations., to read as follows:

104.12 Occupancy violations. Whenever any building, structure, or equipment therein which is regulated by this Building Code is being used contrary to the provisions of said Code, the Building Official or an authorized representative may order that such use be discontinued and/or that the building or structure, or a portion thereof, be vacated by written notice served on any person who is causing such use to be continued. Further, the Building Official or an authorized representative may order the evacuation of any building or premises, or a portion thereof, which constitutes a dangerous building as defined in Article XVII of this Chapter.

Notice to stop use shall be given by personal delivery or by certified mail, return receipt requested, to the person responsible for the continued use. Such person shall discontinue the use within the time prescribed by the Building Official after receipt of such notice and shall not resume the use of the building or premises until first rendering the same in compliance with this Building Code.

Notice to vacate a dangerous building or premises shall be posted at or upon each exit of the said structure affected thereby, and shall be in substantially the following form:

"DO NOT ENTER
UNSAFE TO OCCUPY

It is a misdemeanor to occupy this building, or to remove or deface this notice.

Arlington Building Official
(by)_____
(date)_____
(compliance due date)_____"

No person shall remain in or enter any building or premises which has been so posted, except that entry may be made to repair, demolish or remove the unsafe condition. Such entry or the destruction, defacing or removal of said notice prior to approval by the Building Official or an authorized representative shall be a violation of this Building Code.

(6) The amendment of Section 106.1, entitled Submittal documents., amending the second sentence to read as follows:

The construction documents shall be prepared by a Texas Licensed Engineer or Architect as required by this ordinance or by State law.

(7) The amendment of Section 202, entitled Definitions., adding a new definition to read as follows:

HIGH-RISE BUILDING is a building having floors used for human occupancy located more than 75 feet (22 860 mm) above the lowest level of fire department vehicle access.

(8) The amendment of Section 202 adding the definition of "SHALL" to read as follows:

SHALL, as it applies to an act or duty to be performed by the Building Official pursuant to any section of this Building Code, is discretionary. Its use in all other applications in this Code shall be mandatory.

(9) The amendment of Table 302.3.3., footnote e, to read as follows:

e. Assembly uses accessory to Group E Occupancy must comply within the provisions for Group A

Occupancy but for the purpose of Section 302.3 are not considered separate occupancies.

(10) The amendment of Section 403.1, exception #3: to read as follows:

3. Buildings with an occupancy in Group A-5 in accordance with Section 303.1, when used for open air seating; however, this exception does not apply to accessory uses including but not limited to sky boxes, restaurants and similarly enclosed areas.

(11) The amendment of Section 403.2, by the deletion of exception #2 in its entirety.

(12) The amendment of Section 406.6.1, entitled General., adding a second paragraph to read as follows:

This occupancy shall include garages involved in servicing of motor vehicles for items such as lube changes, inspections, windshield repair or replacement, shocks, minor part replacement and other such non-major repair. When the repair garage is only involved in such minor repair, it need not comply with Section 406.6.2.

(13) The amendment of Section 411.4, entitled Automatic sprinklers., to read as follows:

411.4 Automatic sprinklers. An automatic sprinkler system shall be installed in all amusement buildings (as defined in this code). The main water-flow switch shall be electrically supervised. The sprinkler main cutoff valve shall be supervised.

EXCEPTION: An automatic sprinkler system need not be provided for amusement buildings actually operating not more than thirty (30) consecutive days.

(14) The amendment of Section 506.2.2, entitled Open space limits., adding a sentence to read as follows:

In order to be considered as accessible, if not in direct contact with a street or fire lane, a minimum 10 foot wide pathway from the street or approved fire lane must be provided. (See Fire Code Section 503.1.1 for the hose lay measurement pathway requirements.)

(15) The amendment of Table 602, entitled FIRE-RESISTIVE RATING REQUIREMENTS FOR EXTERIOR WALLS BASED ON FIRE SEPARATION DISTANCE[a]., to insert footnote d. to the heading "GROUP A, B, E, F-2, I, R[bd], S-2, U[d]" to read as follows:

d. For one- and two-family dwellings and apartment buildings, open metal carport structures may be constructed within zero (0) feet of the property line without fire-resistive or opening protection when the location of such is approved as required by other City ordinances.

(16) The amendment of Section 705.11, entitled Ducts and air transfer openings., to amend the Exception to read as follows:

EXCEPTION: For other than hazardous exhaust ducts, penetrations by ducts and air transfer openings of fire walls that are not on a lot line shall be allowed provided the penetrations comply with Sections 711 and 715. The size and aggregate width of all openings shall not exceed the limitations of Section 705.8.

(17) The amendment of Section 715.5.2, entitled Fire barriers., to add exception #4 to read as follows:

4. In the duct penetration of the separation between the private garage and its residence when constructed in accordance with Section 302.3.3, exceptions #2 and 3.

(18) The amendment of Section 903.1.2, entitled Residential systems., to read as follows:

903.1.2 Residential systems. Unless specifically allowed by this code, residential sprinkler systems installed in accordance with NFPA 13D or NFPA 13R shall not be recognized for the purposes of exceptions or reductions, commonly referred to as "trade-offs", permitted by other requirements of this code.

(19) The amendment of Section 903.2.1.1, entitled Group A-1., to read as follows:

903.2.1.1 Group A-1. An automatic sprinkler system shall be provided for Group A-1 Occupancies where one of the following conditions exist:

1. The fire area exceeds 12,000 square feet (1115 m^2).

2. The fire area has an occupant load of 300 or more.
3. The fire area is located on a floor other than the level of exit discharge.
4. The fire area contains a multi theater complex.

(20) The amendment of Section 903.2.1.2, entitled Group A-2., to read as follows:

903.2.1.2 Group A-2. An automatic sprinkler system shall be provided for a Group A-2 Occupancies where one of the following conditions exist:

1. The fire area exceeds 5,000 square feet (464.5 m^2).
2. The fire area has an occupant load of 300 or more.
3. The fire area is located on a floor other than the level of exit discharge.

(21) The amendment of Section 903.2.1.3, entitled Group A-3., to read as follows:

903.2.1.3 Group A-3. An automatic sprinkler system shall be provided for Group A-3 Occupancies where one of the following conditions exist:

1. The fire area exceeds 12,000 square feet (1115 m^2).
2. The fire area has an occupant load of 300 or more.
3. The fire area is located on a floor other than the level of exit discharge.

EXCEPTION: Areas used exclusively as participant sports areas where the main floor area is located at the same level as the level of exit discharge of the main entrance and exit.

(22) The amendment of Section 903.2.1.4, entitled Group A-4., to read as follows:

903.2.1.4 Group A-4. An automatic sprinkler system shall be provided for Group A-4 Occupancies where one of the following conditions exist:

1. The fire area exceeds 12,000 square feet (1115 m^2).
2. The fire area has an occupant load of 300 or more.
3. The fire area is located on a floor other than the level of exit discharge.

EXCEPTION: Areas used exclusively as participant sports areas where the main floor area is located at the same level as the level of exit discharge of the main entrance and exit.

(23) The amendment of Section 903.2.7, entitled Group R-1., to read as follows:

903.2.7 Group R-1. An automatic sprinkler system shall be provided throughout buildings with a Group R-1 fire area. For the purpose of establishing automatic sprinkler requirements of this section, fire walls as described in I.B.C., Section 705, shall not constitute separate buildings.

EXCEPTIONS:
1. Where guestrooms are not located more than two stories in height and the building contains less than 20 guest rooms.
2. A residential sprinkler system installed in accordance with Section 903.3.1.2 shall be allowed in buildings of Group R-1.

(24) The amendment of Section 903.2.8, entitled Group R-2., to read as follows:

903.2.8 Group R-2. An automatic sprinkler system shall be provided throughout all buildings with a Group R-2 fire area where any of the following conditions apply:

1. The R-2 is located more than two stories in height, including basements; or
2. The building contains more than 16 dwelling units; or
3. The building contains fraternities and sororities with an occupant load of more than 10.

EXCEPTION: A residential sprinkler system installed in accordance with Section 903.3.1.2 shall be permitted in buildings of Group R-2. For the purpose of establishing automatic sprinkler requirements of this section, fire walls as described in I.B.C., Section 705 shall not constitute separate buildings.

(25) The addition of Section 903.2.10.3, entitled Self-service storage facility., to read as follows:

903.2.10.3 Self service storage facility. An automatic sprinkler system shall be installed throughout all self-service storage facilities.

EXCEPTION: One story self-service storage facilities, that have no interior corridors, with a one-hour fire barrier wall installed between every storage compartment.

(26) The amendment of Section 903.2.12, entitled All occupancies except Groups R-3 and U., to amend the exception to read as follows:

EXCEPTION: Group R-3 as applicable in Section 101.2 with approved fire department access and Group U occupancies, an automatic sprinkler system shall be installed.

(27) The amendment of Section 903.2.12.3, entitled Buildings over 55 feet in height., to read as follows:

903.2.12.3 Buildings over two stories in height. An automatic sprinkler system shall be installed throughout buildings, other than penthouses in compliance with Section 1509, 3 stories or more in height.

EXCEPTION: Open parking structures in compliance with Section 406.3.

(28) The addition of Section 903.2.12.4, entitled High-Piled Combustible Storage., to read as follows:

903.2.12.4 High-Piled Combustible Storage. For any building with a clear height exceeding 12 feet (4572 mm), see Chapter 23 of the Fire Code to determine if those provisions apply.

(29) The addition of Section 903.2.12.5, entitled Spray Booths and Rooms., to read as follows:

903.2.12.5 Spray Booths and Rooms. New and existing spray booths and spraying rooms shall be protected by an approved automatic fire-extinguishing system.

(30) The amendment of Section 903.3.1.1.1, entitled Exempt locations., to read as follows:

903.3.1.1.1 Exempt locations. When approved by the code official, automatic sprinklers shall not be required in the following rooms or areas where such rooms or areas are protected with an approved automatic fire detection system in accordance with Section 907.2 that will respond to visible or invisible particles of combustion. Sprinklers

shall not be omitted from any room merely because it is damp, of fire-resistance-rated construction or contains electrical equipment.

1. Any room where the application of water, or flame and water, constitutes a serious life or fire hazard.
2. Any room or space where sprinklers are considered undesirable because of the nature of the contents, when approved by the code official.
3. Generator and transformer rooms, under the direct control of a public utility, separated from the remainder of the building by walls and floor/ceiling or roof/ceiling assemblies having a fire-resistance rating of not less than two hours.

(31) The amendment of Section 903.3.1.2, entitled NFPA 13R sprinkler systems., to read as follows:

903.3.1.2 NFPA 13R sprinkler system. Where allowed in buildings of Group R, up to and including four stories in height, automatic sprinkler systems shall be hydraulically calculated within the dwelling unit in accordance with NFPA 13R. Sprinkler protection shall be provided throughout, including the means of egress, patios, bathrooms, closets, balconies and attics.

(32) The amendment of Section 903.3.1.3, entitled NFPA 13D sprinkler systems., to read as follows:

903.3.1.3 NFPA 13D sprinkler systems. Non-required automatic sprinkler systems in one and two-family dwellings and manufactured homes may be installed in accordance with NFPA 13D.

(33) The amendment of Section 903.3.5, entitled Water supplies., to add a second paragraph to read as follows:

Water supply as required for such systems shall be provided in conformance with the supply requirements of the respective standards; however, every fire protection system shall be designed with a 10 psi safety factor.

(34) The amendment of Section 903.3.7, entitled Fire department connections., to read as follows:

903.3.7 Fire department connections. The location of fire department connections shall be approved by the code official.

(35) The amendment of Section 903.4, entitled Sprinkler system monitoring and alarms., to amend and add a second paragraph after the exception to read as follows:

903.4 Sprinkler system monitoring and alarms. All valves controlling the water supply for automatic sprinkler systems and water-flow switches on all sprinkler systems shall be electrically supervised and monitored by a UL listed Central Station. The fire-pump system shall also be supervised and monitored for "power available," "phase reversal" and "pump running" conditions on distinct circuits.

EXCEPTIONS:
1. Automatic sprinkler systems protecting one- and two-family dwellings.
2. Limited area systems serving fewer than 20 sprinklers.
3. Jockey pump control valves that are sealed or locked in the open position.

Sprinkler and standpipe system water-flow detectors shall be provided for each floor tap to the sprinkler system and shall cause an alarm upon detection of water flow.

(36) The amendment of Section 903.4.2, entitled Alarms., to read as follows:

903.4.2 Alarms. Approved audible devices shall be connected to every automatic sprinkler system. Such sprinkler water-flow devices shall be activated by water flow equivalent to the flow of a single sprinkler of the smallest orifice size installed in the system. Alarm devices shall be provided on the exterior of the building in an approved location. An approved audible/visible sprinkler flow alarm to alert the occupants shall be provided in the interior of the building in a normally occupied location. Where a fire alarm system is installed, actuation of the automatic sprinkler system shall actuate the building fire alarm system.

(37) The amendment of Section 903.4.3, entitled Floor control valves., to read as follows:

903.4.3 Floor control valves. Sprinkler and standpipe system water-flow detectors shall be provided for each floor tap to the sprinkler

system and shall cause an alarm upon detection of water flow.

(38) The amendment of Section 905.4, entitled Location of Class I standpipe hose connections., by revising item #5 to read as follows:

5. Where the roof has a slope less than four units vertical in 12 units horizontal (33.3-percent slope), each standpipe shall be provided with a two-way hose connection located either on the roof or at the highest landing of stairways with stair access to the roof. An additional hose connection shall be provided at the top of the most hydraulically remote standpipe for testing purposes.

(39) The amendment of Section 905.9, entitled Valve supervision., to add a second paragraph after the exceptions to read as follows:

Sprinkler and standpipe system water-flow detectors shall be provided for each floor tap to the sprinkler system and shall cause an alarm upon detection of water flow. All control valves in the sprinkler and standpipe systems except for fire department hose connection valves shall be electrically supervised to initiate a supervisory signal at the central station upon tampering.

(40) The addition of Sections 907.1.2.1, 907.1.2.2 and 907.1.2.3 to read as follows:

907.1.2.1 Fire alarm control panel. The fire alarm control panel shall be installed in an approved location adjacent to the main entrance to the building unless otherwise approved by the Fire Code Official

907.1.2.2 Key/Codes. Fire alarm control panel functions such as silence and reset shall be operable without the use of a key or code. The panel cover may be locked, but the function keys cannot require a key or code.

907.1.2.3 Alarm verification. Alarm verification shall be provided for smoke detectors. Alarm verification shall be provided at the fire alarm control panel when more than thirty (30) detectors are installed.

EXCEPTION: Alarm verification is not required for single station type smoke detectors.

(41) The addition of Section 907.1.3, entitled Design Standards., to read as follows:

907.1.3 Design Standards. Fire alarm systems, automatic fire detectors, emergency voice alarm communication systems and notification devices shall be designed, installed and maintained in accordance with NFPA 72 and local amendments. All alarm systems new or replacement serving 50 or more alarm actuating devices shall be addressable fire detection systems. Alarm systems serving more than 75 smoke detectors or more than 200 total alarm activating devices shall be analog intelligent addressable fire detection systems.

EXCEPTION: Existing systems need not comply unless the total building remodel or expansion initiated after January 1, 1998 exceeds 30% of the building. When cumulative building remodel or expansion exceeds 50% of the building must comply within 18 months of permit application.

(42) The amendment of Section 907.2.3, entitled Group E., to read as follows:

907.2.3 Group E. A manual fire alarm system shall be installed in Group E educational occupancies. When automatic sprinkler systems or smoke detectors are installed, such systems or detectors shall be connected to the building fire alarm system. An approved smoke detection system shall be installed in Group E day care occupancies. Unless separated by a minimum of 100' open space, all buildings, whether portable buildings or the main building, will be considered one building for alarm occupant load consideration and interconnection of alarm systems.

(43) The amendment of Section 907.2.3, entitled Group E., exception #1, and the addition of exception #1.1 added to read as follows:

EXCEPTIONS:

1. Group E educational and day care occupancies with an occupant load of less than 50 when provided with an approved automatic sprinkler system.

1.1 Residential In-Home day care with not more than 12 children may use interconnected single station detectors in all habitable rooms. (For care of more than five children 2½ or less years of age, see Section 907.2.6).

(44) The addition of Section 907.2.8.2, entitled Carbon Monoxide Detectors., to read as follows:

907.2.8.2 Carbon Monoxide Detectors. In hotels and motels, carbon monoxide detectors shall be provided in all locations where there is gas-fired equipment, such as, but not limited to, dryers, HVAC, or hot water heaters.

(45) The addition of Section 907.2.9.1, entitled Manual fire alarm boxes., to read as follows:

907.2.9.1 Manual Fire Alarm Boxes. Manual fire alarm boxes are prohibited in Group R-2 apartment houses less than four (4) stories in height.

(46) The amendment of Section 907.2.12, entitled High-rise buildings., exception #3, to read as follows:

3. Buildings with an occupancy in Group A-5 in accordance with Section 303.1 of the International Building Code, when used for open air seating; however, this exception does not apply to accessory uses, including but not limited to sky boxes, restaurants and similarly enclosed areas.

(47) The amendment of Section 907.2.12.2, entitled Emergency voice/alarm communication system., to read as follows:

907.2.12.2 Emergency voice/alarm communication system. The operation of any automatic fire detector, sprinkler water-flow device or manual fire alarm box shall automatically sound an alert tone followed by voice instructions giving approved information and directions on a general or selective basis to the following terminal areas on a minimum of the alarming floor, the floor above, and the floor below in accordance with the International Fire Code.

(48) The amendment of Section 907.3, entitled Manual fire alarm boxes., to add a second paragraph to read as follows:

Manual alarm actuating devices shall be an approved double action type.

(49) The addition of Section 907.5.1 entitled Alarms., to read as follows:

907.5.1 Alarms. All fire alarm systems shall be installed in such a manner that the failure of any single alarm-actuating or alarm-indicating device

will not interfere with the normal operation of any other such devices. All systems shall be Class "A" wired with a minimum of six feet separation between supply and return loops. IDC - Class "A" style - D - SLC Class "A" Style 6 - notification Class "B" Style Y.

(50) The amendment of Section 907.8.2, entitled High-rise buildings., by adding an exception to read as follows:

EXCEPTION: Addressable systems.

(51) The amendment of Section 1003.2.12.2, entitled Opening limitations., exception #3 to read as follows:

3. In occupancies in Group I-3, F, H or in non-public portions of S, balusters, horizontal intermediate rails or other construction shall not permit a sphere with a diameter of 21 inches (533 mm) to pass through any opening.

(52) The amendment of Section 1003.3.1.3.4, entitled Access-controlled egress doors., to read as follows:

1003.3.1.3.4 Access-controlled egress doors. The entrance doors in a means of egress in buildings with an occupancy in Group A, B, E, M, R-1 or R-2 and entrance doors to tenant spaces in occupancies in Groups A, B, E, M, R-1, and R-2 are permitted to be equipped with an approved entrance and egress access control system which shall be installed in accordance with the following criteria:

1. Egress doors shall be readily openable from the egress side without the use of a key, card or special knowledge of effort.
2. Push buttons are not allowed for egress purposes.
3. All devices utilized for exiting shall be listed for the purpose.
4. Activation of the building fire alarm system and/or sprinkler system, if provided, shall automatically unlock the doors, and the doors shall remain unlocked until the fire alarm system has been reset.
5. A Knox box may be required by the Fire Code Official for Fire Department access.

(53) The amendment of Section 1003.3.1.8.2, entitled Delayed egress locks., to revise and add a sentence after Items 1-6 to read as follows:

1003.3.1.8.2 Delayed egress locks. Approved, listed, delayed egress locks shall be permitted to be installed on doors serving any occupancy except Group A, E and H occupancies in buildings which are equipped throughout with an automatic sprinkler system in accordance with Section 903.3.1.1 and an approved automatic smoke or heat detection system installed in accordance with Section 907, provided that the doors unlock in accordance with Items 1 through 6 below. A building occupant shall not be required to pass through more than one door equipped with a delayed egress lock before entering an exit.

(Items 1-6 remain unchanged.)

A permit from the Fire Department is required prior to the installation of any delayed egress locks or other special locking systems.

(54) The amendment of Section 1004.3.2.1, entitled Construction., to add exception #5 to read as follows:

5. In Group B office buildings, corridor walls and ceilings need not be of fire-resistive construction within office spaces of a single tenant when the space is equipped with an approved automatic smoke-detection system within the corridor. The actuation of any detector shall activate alarms audible in all areas served by the corridor. The smoke-detection system shall be connected to the building's fire alarm system where such a system is provided.

(55) The amendment of Section 1005.2.1, entitled Minimum number of exits., to read as follows:

1005.2.1 Minimum number of exits. Every floor area shall be provided with the minimum number of approved independent exits as required by Table 1005.2.1 based on the occupant load except as modified in Section 1005.2.2. For the purpose of this chapter, occupied roofs shall be provided with exits as required for floors. The required number of exits from any story, basement or individual space shall be maintained until arrival at grade or the public way.

(56) The amendment of Section 1101.2, entitled Design., to add an exception to read as follows:

EXCEPTION. Buildings regulated under State Law and built in accordance with State certified plans, including any variances or waivers granted by the State, shall be deemed to be in compliance with the requirements of this Chapter.

(57) The amendment of Section 1108.2.1, entitled Unisex toilet and bathing rooms., to read as follows:

1108.2.1 Unisex toilet and bathing rooms. In assembly and mercantile occupancies, an accessible unisex toilet room shall be provided where an aggregate of six or more male or female water closets are provided. In buildings of mixed occupancy, only those water closets required for the assembly or mercantile occupancy shall be used to determine the unisex toilet room requirement. In recreational facilities where separate-sex bathing rooms are provided, an accessible unisex bathing room shall be provided. Fixtures located within unisex toilet and bathing rooms shall be included in determining the number of fixtures provided in an occupancy.

(58) The amendment of Section 1209.2, entitled Walls., exception #2, to read as follows:

2. Toilet rooms that are not accessible to the public and which have not more than one water closet; provided that walls around urinals comply with the minimum surrounding material specified by the Plumbing Code.

(59) The amendment of Section 1202.1, entitled General, to add the exception to read as follows:

EXCEPTION: Private laundry rooms in Group R, Division 2 and inside individual dwelling units of Group R, Division 3 and 4 Occupancies.

(60) The amendment of Section 1403.3, entitled Vapor retarder., to delete the exceptions and revise to read as follows:

1403.3 Vapor retarder. In all framed walls, floors and roof/ceilings comprising elements of the building thermal envelope, a vapor retarder, when installed, shall be installed in a manner so as to not trap moisture. Vapor retarders shall be tested in accordance with ASTM E 96.

(61) The amendment of Table 1405.2, entitled Minimum Thickness of Weather Coverings., by adding footnote "d" wood shingles to read as follows:

d: Wood shingles and shakes shall not be used as an exterior wall covering within seven feet (7') of grade for Group R-1 and R-2 Occupancies.

All wood shingles or shakes to be used as an exterior wall covering for Group R-1 and R-2 Occupancies shall be fire-retardant shakes and shingles. Fire-retardant shakes and shingles are wood shakes and shingles complying with ASTM D 2898 impregnated by the full-cell vacuum-pressure process with fire retardant chemicals, and have been qualified by ASTM E 108 or U.L. 790 for use on Class A, B or C roofs. Each bundle of treated wood shakes and shingles shall bear labels identifying their roof covering classification and approved quality control agency.

(62) The amendment of Table 1505.1, entitled Minimum Roof Covering Classification for Types of Construction., by replacing footnote b and c with the following:

b. All individual replacement shingles or shakes shall be in compliance with the rating required by this table.
c. Non-classified roof coverings shall be permitted on buildings of U occupancies having not more than 120 sq. ft. of projected roof area. When exceeding 120 sq. ft. of projected roof area, buildings of U occupancies may use non-rated non-combustible roof coverings.

(63) The amendment of Section 1505.7, entitled Special purpose roofs., by deleting it in its entirety.

(64) The amendment of Section 1510.3, entitled Recovering verses replacement., by the addition of subparagraph #4, to read as follows:

4. **Asphalt shingles.** Not more than one overlay of asphalt shingles shall be applied over an existing asphalt or wood shingle roof.

(65) The amendment of Section 1610.2, entitled Retaining Walls, by the addition of the following paragraph and "EXCEPTION":

Retaining walls exceeding three feet (3') in height shall be constructed of materials other than wood, including treated wood products, and

shall be designed by a professional engineer. A wall built in tiers shall be considered a single wall in height when the upper tier is set back less than one and one-half (1½) times the height of the wall section below.

EXCEPTION: Retaining walls erected on properties used for Group R-3 occupancies may be constructed up to six feet (6') in height of any approved materials. A professional engineer shall design these retaining walls when exceeding a height of four feet (4'). Unless specifically approved by the Building Official, such walls shall not support a building, driveway or other permanent construction closer to the wall than one and one-half (1½) times the full height of the wall.

(66) The amendment of Section 1704.1, entitled General, to revise the first sentence to read as follows:

All construction or work for which a permit is required shall be subject to inspection by the Building Official. The Building Official may require certain types of construction to have continuous inspection by special inspectors as specified in Chapter 17 of this code.

(67) The addition of Section 2308.2.3, entitled Application to engineered design., to read as follows:

2308.2.3 Application to engineered design. When accepted by the code official, any portion of this section is permitted to apply to buildings that are otherwise outside the limitations of this section provided that:

1. The resulting design will comply with the requirements specified in Chapter 16;
2. The load limitations of various elements of this section are not exceeded; and
3. The portions of this section which apply are identified by an engineer in the construction documents.

(68) The amendment of Section 2406.2.1, entitled Exceptions, number 2, to read as follows:

2. Decorative glass, in Section 2406.2 items 1, 6 or 7 when used for decorative purposes or item 5 when not equipped with a showerhead.

(69) The amendment of Section 2901.1, entitled Scope., by adding a sentence to read as follows:

The provisions of this Chapter are meant to work in coordination with the provisions of Chapter 4 of the Plumbing Code. Should any conflicts arise between the two chapters, the Code Official shall determine which provision applies.

(70) The amendment of Section 2902.1, entitled Minimum number fixtures., to read as follows:

2902.1 Minimum number of fixtures. Plumbing fixtures shall be provided for the type of occupancy and in the minimum number as follows:

1. Assembly Occupancies: At lease one drinking fountain shall be provided at each floor level in an approved location.

   EXCEPTION: A drinking fountain need not be provided in a drinking or dining establishment.

2. Groups A, B, F, H, I, M and S Occupancies: Buildings or portions thereof where persons are employed shall be provided with at least one water closet for each sex except as provided for in Section 2902.2.
3. Group E Occupancies: Shall be provided with fixtures as shown in Table 2902.1
4. Group R Occupancies: Shall be provided with fixtures as shown in Table 2902.1

Types of occupancies not shown in Table 2902.1 shall be considered individually by the building official. The number of occupants shall be determined by this code. Occupancy classification shall be determined in accordance with Chapter 3.

(71) The addition of Section 2902.1.1, entitled Finish material., to read as follows:

2902.1.1 Finish material. Finish materials shall comply with Section 1209.

(72) The addition of Section 2902.1.2, entitled Unisex toilet and bath fixtures., to read as follows:

2902.2 Unisex toilet and bath fixtures. Fixtures located within unisex toilet and bathing rooms complying with Chapter 11 are permitted to be included in determining the minimum required number of fixtures for assembly and mercantile occupancies.

(73) The amendment of Section 3109.1, entitled General, to read as follows:

The provisions of this section shall apply to the design and construction of barriers for all swimming pools.

EXCEPTION: The following uses are regulated by State statute and are not subject to this section:

1. Group R-2 apartments.

2. A pool owned, controlled, or maintained by the owner of a multi-unit rental complex or by property owners association.

(74) The amendment of Section 3109.2 entitled Definitions, to read as follows:

3109.2 Definition. The following words and terms shall, for the purposes of this section and as used elsewhere in this code, have the meaning shown herein.

MULTI-UNIT RENTAL COMPLEX is two or more dwelling units in one or more buildings that are under common ownership, managed by the same owner, managing agent, or management company, and located on the same lot or tract of land or adjacent lots or tracts of land. The term includes a condominium project. The term does not include:

(A) A facility primarily renting rooms to overnight guests; or

(B) A single-family home or adjacent single-family homes that are not part of a condominium project.

POOL DECK is a flat walking surface consisting of wood, stone, brick, concrete or other similar material located within five feet (5') of the waters edge of a swimming pool or spa.

PROPERTY OWNERS ASSOCIATION is an association of property owners for a residential subdivision, condominium, cooperative, townhouse project, or other project involving residential dwellings.

SELF-CLOSING GATE is a gate, which closes or shuts automatically, without the aid of human, electrical, solar or battery power after being opened.

SELF-CLOSING AND SELF-LATCHING DEVICE is a device that causes a gate to automatically close and latch without human, electrical, solar or battery power.

SWIMMING POOLS. Any structure intended for swimming, recreational bathing or wading that contains water over 24 inches (610 mm) deep. This includes in-ground, aboveground and on-ground pools; hot tubs; spas and fixed-in-place wading pools.

(75) The amendment of Section 3109.4.1.3, entitled Closely Spaced Horizontal Members, by the addition of an exception to number 1 to read as follows:

EXCEPTION: When horizontal members are part of a fence that is at least 6 feet (1830 mm) in height, the horizontal members need not be on the pool side of the barrier.

(76) The amendment of Section 3109.4.1.7, entitled Gates, by the addition of an exception to number 4 to read as follows:

EXCEPTION: Driveway access gates across a paved or improved surface intended for regular vehicle access shall not be located in a swimming pool barrier."

(77) The amendment of Section 3304.1, entitled Excavation and Fill, by the addition of the following five (5) paragraphs and one (1) "EXCEPTION" after the first paragraph:

Should trench excavations exceed five feet (5') in depth, bid documents and construction contracts must include provisions for specifications for adequate safety systems that meet Occupational Safety and Health Administration (OSHA) standards. Further, these plans and specifications shall include a pay item for these safety systems, which is to be a part of the contract. In addition, a safety program outline shall be provided to the property owner by the contractor and the contractor's safety record shall be reviewed as a condition of the contract award.

Prior to performing such excavations, the contractor must submit plans and specifications for trench shoring to the Building Official for review. The plans shall be stamped, signed and dated by a registered professional engineer

attesting that these plans meet OSHA requirements in accordance with state law.

The contract requirements of this Section shall not apply to contracts entered into with persons subject to the safety standards adopted under V.A.C.S., Article 6053-1, entitled Transportation of Gas and Gas Pipeline Facilities.

Acceptable fill shall only be comprised of one or more of the following materials: Dirt, concrete or asphalt. No person shall cause, allow, suffer or permit fill containing any other material to be used for any building, structure, foundation or retaining structure.

No person shall cause, allow, suffer or permit fill to be placed or stored, upon any undeveloped lot not currently experiencing ongoing construction, in such a manner that said fill is not spread uniformly so that no area of fill differs in height by more than twenty-four inches (24") from any other area of fill on said lot. Provided, however, that upon written notice by the Building Official or a designated representative, the record property owner of any such lot shall be allowed forty-five (45) days to remove or spread said fill in order to comply with this provision. Notice shall be deemed sufficient for this purpose if mailed, by certified mail, return receipt requested, to the last-known address of the record property owner, or if personally delivered to said owner.

EXCEPTION: This provision shall not apply to fill located upon the premises of a business, which provides said fill to others for compensation. A valid certificate of occupancy for such business shall be sufficient to establish the applicability of this exception.

D. The amendment of the following I.R.C. provisions:

(1) The amendment of Section R102.4, entitled Referenced codes and standards., to read as follows:

R102.4 Referenced codes and standards. The codes, when specifically adopted, and standards referenced in this code shall be considered part of the requirements of this code to the prescribed extent of each such reference. Whenever amendments have been adopted to the referenced codes and standards, each reference to said code

and standards shall be considered to reference the amendments as well. Any reference made to NFPA 70 or the ICC Electrical Code shall mean the Electrical Code as adopted.

Where differences occur between provisions of this code and referenced codes and standards, the provisions of this code shall apply.

EXCEPTION: Where enforcement of a code provision would violate the conditions of the listing of the equipment or appliance, the conditions of the listing and manufacture's instructions shall apply.

(2) The amendment of I.R.C. Section R202, entitled Definitions., to revise the definition of "Townhouse" to read as follows:

TOWNHOUSE. A single-family dwelling unit constructed in a group of attached units separated by property lines in which each unit extends from foundation to roof and with open space on at least two sides.

(3) The amendment of table R301.2(1), entitled Climatic and Geographic Design Criteria, fill in as follows:

Ground Snow Load	Wind	Seismic Design Category[f,g]
	Speed[e] (mph)	
5 lb/ft^2	90 (3-sec-gust)/75 fastest mile	A

Subject to damage from				Winter Design Temp[f]	Flood Hazards[h]
Weathering[a]	Frost line depth[b]	Termite[c]	Decay[d]		
Moderate	6"	Very heavy	Slight to moderate	22°F	Local code

(4) The amendment of I.R.C. Section 302, entitled Location on lot., by the addition of Section R302.4 entitled Fire sprinkler system., to read as follows:

R302.4 Fire sprinkler system. All R3 and U occupancies are required to have an approved fire sprinkler system.

EXCEPTION: Buildings with an approved fire department access.

(5) The amendment of I.R.C. Section R302.1, entitled Exterior walls., Exception, to read as follows:

EXCEPTIONS:

1. Tool and storage sheds, playhouses and similar structures exempted from permits by Section R105.2 are not required to provide wall protection based on location on the lot. Projections beyond the exterior wall shall not extend over the lot line.
2. Open metal carport structures may be constructed within zero (0) feet of the property line without fire-resistive or opening projection when the location of such is approved as required by other City ordinances.

(6) The amendment of I.R.C. Section R303.3, entitled Bathrooms., Exception, to read as follows:

EXCEPTIONS: The glazed areas shall not be required where artificial light and a mechanical ventilation system, complying with one of the following, are provided.

1. The minimum ventilation rates shall be 50 cfm (23.6 L/s) for intermittent ventilation or 20 cfm (9.4 L/s) for continuous ventilation. Ventilation air from the space shall be exhausted directly to the outside.
3. Bathrooms that contain only a water closet, lavatory or combination thereof may be ventilated with an approved mechanical recirculating fan or similar device designed to remove odors from the air.

(7) The amendment of I.R.C. Section R303.6, entitled Required heating., to read as follows:

R303.6 Required heating. Every dwelling unit shall be provided with heating facilities capable of maintaining a minimum room temperature of 68°F (20°C) at a point 3 feet (914 mm) above the floor and 2 feet (610 mm) from exterior walls in all habitable rooms at the design temperature.

(8) The amendment of I.R.C. Section R314.8, entitled Under stair protection., to read as follows:

R314.8 Under stair protection. Enclosed accessible space under stairs shall have walls, under stair surface and any soffits protected on the enclosed

side with 5/8-inch (15.8 mm) fire-rated gypsum board or one-hour fire-resistive construction.

(9) The amendment of I.R.C. Section R321.1, entitled Two-family dwellings., to add a second exception to read as follows:

2. Two-family dwelling units that are also divided by a property line through the structure shall be separated as required for townhouses.

(10) The amendment of I.R.C. Section R322.1, entitled Moisture control., to delete the exceptions and revise to read as follows:

R322.1 Moisture control. In all framed walls, floors and roof/ceilings comprising elements of the building thermal envelope, a vapor retarder, when installed, shall be installed in a manner so as to not trap moisture.

(11) The amendment of I.R.C. Section R327.1, entitled General., to read as follows:

R327.1 General. All buildings and structures, when permitted to be erected in areas prone to flooding as identified in Table R301.2(1) and classified as either flood hazard areas (including A Zones) or coastal high hazard areas (including V-Zones), shall be constructed and elevated as required by the provisions contained in this section or by other local provisions as applicable.

(12) The amendment of I.R.C. Section R403.1.6, entitled Foundation anchorage., to revise the second sentence of the second paragraph to read as follows:

There shall be a minimum of two bolts per piece with one bolt located not more than 12 inches (305 mm) or less than seven bolt diameters from each end of the piece.

(13) The amendment of I.R.C. Section R703.7.4.1, entitled Size and spacing., to add a second paragraph to read as follows:

For 3¼ square feet (0.302 m^2) of wall area, the following dimensions shall be adhered to:

1. When ties are placed on studs 16" o.c., they shall be spaced no further apart than 29"

vertically starting approximately 15" from the foundation.

2. When ties are placed on studs 24" o.c., they shall be spaced no further apart than 19" vertically starting approximately 10" from the foundation.

(14) The amendment of I.R.C. Section R703.7.4.2, entitled Air space., to add a second paragraph to read as follows:

When using ties that will flex when pushed, spot bedding of cement mortar shall be installed on all ties.

(15) The addition of I.R.C. Section R902.3, entitled Minimum roof class., to read as follows:

R902.3 Minimum roof class. All roof coverings shall be a minimum Class C. All individual replacement shingles or shakes shall be a minimum Class C.

EXCEPTION: Non-classified roof coverings shall be permitted on buildings of U occupancies having not more than 120 sq. ft. of projected roof area. When exceeding 120 sq. ft. of projected roof area, buildings of U occupancies may use non-rated non-combustible coverings.

(16) The amendment of I.R.C. Section R907.1, entitled General., to add a sentence to read as follows:

All individual replacement shingles or shakes shall comply with Section R902.3.

(17) The amendment of I.R.C. Section R1005.2, entitled Exterior air intake., to read as follows:

R1005.2 Exterior air intake. The exterior air intake shall be capable of providing all combustion air from the exterior of the dwelling or from spaces within the dwelling ventilated with outside air such as attic spaces. The exterior air intake shall not be located within the garage or basement of the dwelling nor shall the air intake be located at an elevation higher than the firebox. The exterior air intake shall be covered with a corrosion-resistant screen of ¼-inch (6.4 mm) mesh.

(18) The addition of I.R.C. Section N1101.1.3.4, entitled Exterior basement or slab insulation., to read as follows:

N1101.1.3.4 Exterior basement or slab insulation. When susceptibility to termite damage is classified as "very heavy" according to Table R301.2(1), designs employing basement or slab exterior insulation capable of harboring termites shall not be utilized.

(19) The amendment of I.R.C. Section N1101.2.1, entitled Residential buildings, type A-1., to read as follows:

N1101.2.1 Residential Buildings, Type A-1. Compliance shall be demonstrated by one of the following:

1. Meeting the requirements of this chapter for buildings with a glazing area that does not exceed 15 percent of the gross area of exterior walls;
2. Meeting the requirements of this chapter for buildings with a glazing area that is greater than 15 percent but not exceeding 20 percent of the gross area of exterior walls and air conditioning equipment rated 12 SEER or higher;
3. Meeting the requirements of this chapter for buildings with a glazing area that is greater than 20 percent but not exceeding 25 percent of the gross area of exterior walls and air conditioning equipment rated 14 SEER or higher; or
4. Meeting the requirements of the *International Energy Conservation Code* for residential buildings, Type A-1.

(20) The amendment of I.R.C. Section N1102.1, entitled Thermal performance criteria., to read as follows:

N1102.1 Thermal performance criteria. The minimum required insulation R-value or maximum required U-factor for each element in the building thermal envelope (fenestration, roof/ceiling, opaque wall, floor, slab edge, crawl space wall and basement wall) shall be in accordance with the criteria in Table N1102.1.

Residential building, Type A-1, with greater than 25 percent glazing area; residential buildings, Type A-2, with greater than 25 percent glazing area; and any building in climates with HDD equal to or greater than 13,000; shall determine compliance using the building envelope

requirements of the *International Energy Conservation Code*.

(21) The amendment of I.R.C. Table N1102.1, entitled Simplified Prescriptive Building Envelope Thermal Component Criteria Minimum Required Thermal Performance (U-factor and R-value)., to read as follows:

MAXIMUM GLAZING *U*-FACTOR [Btu/(hr$_*$ft$^2_*$F)]	MINIMUM INSULATION *R*-VALUE [(hr$_*$ft$^2_*$F)/Btu]						
	Ceilings open to Attic Space	Ceiling Joist/ Roof Rafter Assembly	Walls	Floors	Basement Walls	Slab perimeter	Crawl space walls
0.65	R-38	R-22	R-13	R-19	R-0	R-0	R-0

(22) The amendment of I.R.C. Section N1102.2, entitled Maximum solar heat gain coefficient for fenestration products., to read as follows:

N1102.2 Maximum solar heat gain coefficient for fenestration products. The area-weighted-average solar heat gain coefficient (SHGC) for glazed fenestration installed in climate zones with less than 3,500 HDD shall not exceed 0.40.

(23) The addition of I.R.C. Section M1304.2, entitled Minimum burial depth., to read as follows:

M1304.2 Minimum burial depth. Underground fuel piping systems shall be installed a minimum depth of 18 inches (458 mm) below grade.

(24) The amendment of I.R.C. Section M1305.1.3, entitled Appliances in attics., to read as follows:

M1305.1.3 Appliances in attics. Attics containing appliances requiring access shall be provided with an opening and a clear and unobstructed passageway large enough to allow removal of the largest appliance, but not less than 30 inches (762 mm) high and 22 inches (559 mm) wide and not more than 20 feet (6096 mm) in length when measured along the centerline of the passageway from the opening to the appliance. The passageway shall have continuous solid flooring in accordance with Chapter 5 not less than 24 inches (610 mm) wide. A level service space at least 30 inches (762 mm) deep and 30 inches (762 mm) wide shall be present along all sides of the appliance where access is required. The clear access opening dimensions

shall be a minimum of 20 inches by 30 inches (508 mm by 762 mm), or larger where such dimensions are not large enough to allow removal of the largest appliance. As a minimum, access to the attic space shall be provided by one of the following:

1. A permanent stair.
2. A pull down stair.
3. An access door from an upper floor level.

EXCEPTION: The passageway and level service space are not required where the appliance is capable of being serviced and removed through the required opening.

(25) The addition of I.R.C. Section M1305.1.5, entitled Water heaters above ground or floor., and Section M1305.1.5.1 to read as follows:

M1305.1.5 Water heaters above ground or floor. When the mezzanine or platform in which a water heater is installed is more than eight (8) feet (2438 mm) above the ground or floor level, it shall be made accessible by a stairway or permanent ladder fastened to the building.

M1305.1.5.1. Whenever the mezzanine or platform is not adequately lighted or access to a receptacle outlet is not obtainable from the main level, lighting and a receptacle outlet shall be provided in accordance with Section M1305.1.3.1.

(26) The amendment of I.R.C. Section M1305.1.3.1, entitled Electrical requirements., to add a sentence to read as follows:

Low voltage wiring of 50 Volts or less shall be installed in a manner to prevent physical damage.

(27) The amendment of I.R.C. Section M1305.1.4.1, entitled Ground clearance., to read as follows:

M1305.1.4.1 Ground clearance. Appliances supported from the ground shall be level and firmly supported on a concrete slab or other approved material extending above the adjoining grade a minimum of 3 inches (76 mm). Appliances suspended from the floor shall have a clearance of not less than 6 inches (152 mm) above the ground.

(28) The amendment of I.R.C. Section M1305.1.4.3, entitled Electrical requirements., to add a sentence to read as follows:

Low voltage wiring of 50 Volts or less shall be installed in a manner to prevent physical damage.

(29) The amendment of I.R.C. Section M1307.3.1, entitled Protection from impact., by deleting it in its entirety.

(30) The amendment of I.R.C. Section M1501.2, entitled Exhaust duct size., to read as follows:

M1501.2 Exhaust duct size. The minimum diameter of the exhaust duct shall be as recommended by the manufacturer, shall be at least the diameter of the appliance outlet and shall be a minimum nominal size of 4 inches (102 mm) diameter. The size of duct shall not be reduced along its developed length nor at the point of termination.

(31) The amendment of I.R.C. Section M1501.3, entitled Length limitation., to read as follows:

M1501.3 Length limitation. The maximum length of a clothes dryer exhaust duct shall not exceed 25 feet (7620 mm) from the dryer location to the wall or roof termination with not more than two bends. When extra bends are installed, the maximum length of the duct shall be reduced 2.5 feet (762 mm) for each 45-degree (0.79 rad) bend and 5 feet (1524 mm) for each 90-degree (1.6 rad) bend that occur after the first tow bends, measuring in the direction of airflow. The maximum length of the exhaust duct does not include the transition duct.

EXCEPTION: Where the make and model of the clothes dryer to be installed is known and the manufacturer's installation instructions for such dryer are provided to the building official, the maximum length of the exhaust duct, including any transition duct, shall be permitted to be in accordance with the dryer manufacturer's installation requirements.

(32) The amendment of I.R.C. Section M1601.3.4, entitled Duct insulation., item #1, to read as follows:

1. Duct insulation shall conform to the requirements of Table M1601.3.4 and Section N1101.2. Should there be any conflicts between this section and the energy efficiency provisions, the energy efficiency provisions shall take precedence.

A vapor retarder in accordance with Table M1601.3.4, or aluminum foil having a minimum thickness of 2 mils (0.051 mm), shall be installed on the exterior of insulation on cooling supply ducts that pass through nonconditioned spaces conducive to condensation.

Insulations having a permeance of 0.05 perms [2.87 ng/(Pa•s•m^2)] or less shall not be required to be covered.

(Items 2 and 3 to remain unchanged.)

(33) The addition of I.R.C. Table M1601.3.4, entitled Insulation of Ducts., to read as follows:

Table M1601.3.4 - Insulation of Ducts

Duct Location	**Insulation Types Mechanically Cooled**	**Heating Zone** [1]	**Insulation Types Heating Only**
On roof on exterior of building	C, V[2] and W	I II III	A and W B and W C and W
Attics, garages and crawl spaces	A and V[2]	I II III	A A B
In walls[3], within floor-ceiling spaces[3]	A and V[2]	I II III	A A B
Within the conditioned space or in basements; return ducts in air plenums	None required		None required
Cement slab or within ground	None required		None required

Note: Where ducts are used for both heating and cooling, the minimum insulation shall be as required for the most restrictive condition.

[1] Heating Degree Days:
Zone I below 4,500 D.D.
Zone II 4,501 to 8,000 D.D.
Zone III over 8,000 D.D.

[2] Vapor retarders shall be installed on supply ducts in spaces vented to the outside in geographic areas where the summer dew point temperature based on the 2 ½ percent column of dry-bulb and mean coincident wet-bulb temperature exceeds 60^0 F. (15.4^0 C).

[3] Insulation may be omitted on that portion of a duct which is located within a wall- or a floor-ceiling space where:

[3.1] Both sides of the space are exposed to conditioned air.

[3.2] The space is not ventilated.

[3.3] The space is not used as a return plenum.

[3.4] The space is not exposed to unconditioned air.

Ceilings which form plenums need not be insulated.

INSULATION TYPES[4] :

A -- A material with an installed conductance of 0.48 [2.72 W/(m*K)] or the equivalent thermal resistance of 2.1 [0.367 (m*K)/W].

Example of materials capable of meeting the above requirements:

1-inch (25 mm), 0.60 lb./cu.ft. (9.6 kg/m^3) mineral fiber, rock, slag or glass blankets.

½-inch (13 mm), 1.5 to 3 lb./cu.ft. (24 to 48 kg/m^3) mineral fiber blanket duct liner.

½-inch (13 mm), 3 to 10 lb./cu.ft. (48 to 160 kg/m^3) mineral fiber board.

B -- A material with an installed conductance of 0.24 [1.36 W/(m*K)] or the equivalent thermal resistance of 4.2 [0.735 (m*K)/W].

Example of materials capable of meeting the above requirements:

2-inch (51 mm), 0.60 lb./cu.ft. (9.6 kg/m^3) mineral fiber blankets.

1-inch (25 mm), 1.5 to 3 lb./cu.ft. (24 to 48 kg/m^3) mineral fiber blanket duct liner.

1-inch (25 mm), 3 to 10 lb./cu.ft. (48 to 160 kg/m^3) mineral fiber board.

C -- A material with an installed conductance of 0.16 [0.9 W/(m*K)] or the equivalent thermal resistance of 6.3 [1.1 (m*K)/W].

Example of materials capable of meeting the above requirements:

3-inch (76 mm), 0.60 lb./cu.ft. (9.6 kg/m^3) mineral fiber blankets.

1 ½-inch (38 mm), 1.5 to 3 lb./cu.ft. (24 to 48 kg/m^3) mineral fiber blanket duct liner.

1 ½-inch (38 mm), 3 to 10 lb./cu.ft. (48 to 160 kg/m^3) mineral fiber board.

V --Vapor Retarders: Material with a perm rating not exceeding 0.05 perm [29 ng/Pa*s*m^2]. All joints to be sealed.

W - Approved weatherproof barrier.

[4] The example of materials listed under each type is not meant to limit other available thickness and

density combinations with the equivalent installed conductance or resistance based on the insulation only.

(34) The amendment of I.R.C. Section M2005.2, entitled Prohibited locations., to read as follows:

M2005.2 Prohibited locations. Fuel-fired water heaters shall not be installed in a room used as a storage closet. Water heaters located in a bedroom or bathroom shall be installed in a sealed enclosure so that combustion air will not be taken from the living space. Access to such enclosure may be from the bedroom or bathroom when through a solid door, weather-stripped in accordance with the exterior door air leakage requirements of the *International Energy Conservation Code* and equipped with an approved self-closing device. Direct-vent water heaters are not required to be installed within an enclosure.

(35) The amendment of I.R.C. Section G2403 (202), entitled General Definitions., to revise the definition of "Unvented Room Heater" to add a sentence to read as follows:

For the purpose of installation, this definition shall also include "Unvented Decorative Appliances."

(36) The amendment of I.R.C. Section G2407.15 (304.15), entitled Combustion air ducts., exception to item #1 to read as follows:

EXCEPTION: Unobstructed stud and joist spaces within dwelling units shall not be prohibited from conveying combustion air, provided that not more than one required fireblock is removed.

(37) The amendment of I.R.C. Section G2408.3 (305.4), entitled Private garages., by deleting it in its entirety.

(38) The amendment of I.R.C. Section G2411.5 (401.5), entitled Identification., to add a second paragraph to read as follows:

Both ends of each section of medium pressure corrugated stainless steel tubing (CSST) shall identify its operating gas pressure with an approved tag. The tags are to be composed of aluminum or stainless steel and the following wording shall be stamped into the tag:

"WARNING
½ to 5 psi gas pressure
Do Not Remove"

(39) The amendment of I.R.C. Section G2412.3 (402.3), entitled Sizing., to add an exception to read as follows:

EXCEPTION: Corrugated stainless steel tubing (CSST) shall be a minimum of ½".

(40) The amendment of I.R.C. Section G2414.6 (404.6), entitled Piping in solid floors., to read as follows:

G2414.6 (404.6) Piping in solid floors. Piping in solid floor shall be laid in channels in the floor and covered in a manner that will allow access to the piping with a minimum amount of damage to the building. Where such piping is subject to exposure to excessive moisture or corrosive substances, the piping shall be protected in an approved manner. As an alternative to installation in channels, the piping shall be installed in accordance with Section G2414.11 (404.11).

(41) The amendment of I.R.C. Section G2414.9 (404.9), entitled Minimum burial depth., to read as follows:

G2414.9 (404.9) Minimum burial depth. Underground piping systems shall be installed a minimum depth of 18 inches (458 mm) below grade.

(42) The amendment of I.R.C. Section G2414.9.1 (404.9.1), entitled Individual outside appliances., by deleting it in its entirety.

(43) The amendment of I.R.C. Section G2416.4 (406.4), entitled Test pressure measurements., to add a sentence to read as follows:

The equipment used shall be of an appropriate scale such that pressure loss can be easily determined.

(44) The amendment of I.R.C. Section G2416.4.1 (406.4.1), entitled Test pressure., to read as follows:

G2416.4.1 (406.4.1) Test pressure. The test pressure to be used shall be not less than 10 psig (68.9 kPa gauge), or at the discretion of the Code Official, the piping and valves may be tested at a

pressure of at least six (6) inches (152 mm) of mercury, measured with a manometer or slope gauge. For welded piping, and for piping carrying gas at pressures in excess of fourteen (14) inches water column pressure (3.48 kPa), the test pressure shall not be less than sixty (60) pounds per square inch (413.4 kPa).

(45) The amendment of I.R.C. Section G2416.4.2 (406.4.2), entitled Test duration., to read as follows:

G2416.4.2 (406.4.2) Test duration. Test duration shall be held for a length of time satisfactory to the Code Official, but in no case for less than fifteen (15) minutes. For welded piping, and for piping carrying gas at pressures in excess of fourteen (14) inches water column pressure (3.48 kPa), the test duration shall be held for a length of time satisfactory to the Code Official, but in no case for less than thirty (30) minutes.

(46) The addition of I.R.C. Section G2419.1.4, entitled Valves in CSST installations., to read as follows:

G2419.1.4 Valves in CSST installations. Shutoff valves installed with corrugated stainless steel (CSST) piping systems shall be supported with an approved termination fitting, or equivalent support, suitable for the size of the valves, of adequate strength and quality, and located at intervals so as to prevent or damp out excessive vibration but in no case greater than 12-inches from the center of the valve. Supports shall be installed so as not to interfere with the free expansion and contraction of the system's piping, fittings, and valves between anchors. All valves and supports shall be designed and installed so they will not be disengaged by movement of the supporting piping.

(47) The amendment of I.R.C. Section G2420.1 (410.1), entitled Pressure regulators., to add a second paragraph and an exception to read as follows:

Access to regulators shall comply with the requirements for access to appliances as specified in Section M1305.

EXCEPTION: A passageway or level service space is not required when the regulator is capable of being serviced and removed through the required attic opening.

(48) The amendment of I.R.C. Section G2437.5 (613.6), entitled Clothes dryer ducts., to add a sentence to read as follows:

The size of duct shall not be reduced along its developed length nor at the point of termination.

(49) The amendment of I.R.C. Section G2437.5.1 (613.6.1), entitled Maximum length., to read as follows:

G2437.5.1 (613.6.1) Maximum length. The maximum length of a clothes dryer exhaust duct shall not exceed 25 feet (7620 mm) from the dryer location to the outlet terminal with not more than two bends. When extra bends are installed, the maximum length of the duct shall be reduced 2 ½ feet (762 mm) for each 45-degree (0.79 rad) bend and 5 feet (1524 mm) for each 90-degree (1.6 rad) bend that occur after the first two bends, measuring in the direction of airflow.

(Exception remains unchanged.)

(50) The amendment of I.R.C. Section G2443.2 (620.2), entitled Prohibited use., to read as follows:

G2443.2 (620.2) Prohibited use. One or more unvented room heaters shall not be used as the sole source of comfort heating in a dwelling unit.

EXCEPTION: Existing approved unvented heaters may continue to be used in dwelling units, in accordance with the code provisions in effect when installed, when approved by the Code Official unless an unsafe condition is determined to exist as described in *International Fuel Gas Code* Section 108.7.

(51) The amendment of I.R.C. Section G2446.1.1 (623.1.1), entitled Installation requirements., to read as follows:

G2446.1.1 (623.1.1) Installation requirements. The requirements for water heaters relative to access, sizing, relief valves, drain pans and scald protection shall be in accordance with this code.

(52) The amendment of I.R.C. Section P2503.5.1, entitled Rough plumbing., to add a second paragraph to item #1 to read as follows:

Shower receptors shall be tested for water tightness by filling with water to the level of the rough threshold. The drain shall be plugged in a manner so that both sides of pans shall be subjected to the test at the point where it is clamped to the drain.

(53) The amendment of I.R.C. Section P2503.7.2, entitled Testing., to read as follows:

P2503.7.2 Testing. Reduced pressure principle backflow preventers, double check valve assemblies, double-detector check valve assemblies and pressure vacuum breaker assembles shall be tested at the time of installation, immediately after repairs or relocation at regular intervals as required by applicable state or local provisions.

(54) The addition of I.R.C. Section P2603.6.1, entitled Sewer depth., to read as follows:

P2603.6.1 Sewer depth. Building sewers shall be a minimum of 12 inches (304 mm) below grade.

(55) The amendment of I.R.C. Section P2708.1, entitled General., to read as follows:

P2708.1 General. Shower compartments shall have at least 900 square inches (0.581 m^2) of floor area and be of sufficient size to inscribe a circle with a diameter not less than 30 inches (762 mm). Hinged shower doors shall open outward. The wall area above built-in tubs having installed shower heads and in-shower compartments shall be constructed as per Section R307.2. Such walls shall form a water-tight joint with each other and with either the tub, receptor or shower floor. Thresholds shall be of sufficient width to accommodate a minimum twenty-two (22) inch (559 mm) door.

(Exception to remain unchanged.)

(56) The amendment of I.R.C. Section P2709.1, entitled Construction., to add an exception to read as follows:

EXCEPTION: Showers designed to comply with ICC/ANSI A117.1.

(57) The amendment of I.R.C. Section P2710.1, entitled Finished., to read as follows:

P2710.1 Finished. Shower walls shall be finished in accordance with Section R307.2.

(58) The amendment of I.R.C. Section P2803.6.1, entitled Requirements for discharge., to read as follows:

P2803.6.1 Requirements for discharge. The outlet of a pressure relief valve, temperature relief valve or combination thereof, shall not be directly connected to the drainage system. The discharge from the relief valve shall be piped full size separately to the outside of the building or to an indirect waste receptor located inside the building.

In areas subject to freezing, the relief valve shall discharge through an air gap into an indirect waste receptor located within a heated space, or by other approved means. The discharge pipe shall not discharge into the pan required in Section P2801.5.

The discharge shall be installed in a manner that does not cause personal injury or property damage and that is readily observable by the building occupants. The discharge from a relief valve shall be trapped. The diameter of the discharge piping shall not be less than the diameter of the relief valve outlet.

The discharge pipe shall be installed so as to drain by gravity flow and shall terminate atmospherically. When discharging outside the building, the point of discharge shall be with the end of the pipe not more than two (2) feet (610 mm) nor less than six (6) inches (152 mm) above the ground or the floor level of the area receiving the discharge and pointing downward.

The end of the discharge pipe shall not be threaded.

(59) The amendment of I.R.C. Table P2904.4.1, entitled Water Service Supply and Distribution Piping., by deleting all references (row items 10, 12, and 13) to Polybutylene (PB) plastic pipe and tubing.

(60) The amendment of I.R.C. Section P2904.5, entitled Water distribution pipe., 2904.5.1, entitled Under concrete slabs., and 2904.12, entitled Underground joints., by deleting reference to "PB" plastic pipe.

(61) The amendment of I.R.C. Section P3005.2.6, entitled Base of Stacks., to read as follows:

P3005.2.6 Upper terminal. Each horizontal drain shall be provided with a cleanout at its upper terminal.

EXCEPTION: Cleanouts may be omitted on a horizontal drain less than five (5) feet (1524 mm) in length unless such line is serving sinks or urinals.

(62) The amendment of I.R.C. Section P3103.1, entitled Roof extension., to read as follows:

P3103.1 Roof extension. All open vent pipes which extend through a roof shall be terminated at least six (6) inches (152 mm) above the roof except that where a roof is to be used for any purpose other than weather protection, the vent extensions shall be run at least seven (7) feet (2134 mm) above the roof.

(63) The amendment of I.R.C. Section P3105.2, entitled Fixture drains., and P3105.3, entitled Vertical leg for waste fixture drains., and Figure P3105.3, entitled Vertical leg fixture drain schematic., by deleting them in their entirety.

(64) The amendment of I.R.C. Section P3111.1, entitled Type of fixture., to read as follows:

P3111.1 Type of fixture. A combination waste and vent system shall not serve fixtures other than floor drains, standpipes, indirect waste receptors. Combination drain and vent systems shall not receive the discharge of a food waste grinder.

(65) The amendment of I.R.C. Section P3111.2, entitled Installation., to read as follows:

P3111.2 Installation. The only vertical pipe of a combination drain and vent system shall be the connection between the fixture drain of a standpipe, and the horizontal combination waste and vent pipe. The maximum vertical distance shall be eight (8) feet (2438 mm).

(66) The amendment of I.R.C. Appendix G, Section AG105.2, entitled Outdoor Swimming Pool., by the addition of 8.3 to read as follows:

8.3 Driveway access gates across a paved or improved surface intended for regular vehicle access shall not be located in a swimming pool barrier.

E. The amendment of the following I.E.C.C. provisions:

(1) The amendment of I.E.C.C. Section 101.3, entitled Compliance., amended to read as follows:

101.3 Compliance. Compliance with this code shall be determined in accordance with Sections 101.3.1, 101.3.2, or 101.3.3.

(2) The addition of I.E.C.C. Section 101.3.3 entitled Alternative compliance., to read as follows:

101.3.3. Alternative compliance. A building certified through a voluntary energy performance testing program approved as meeting or exceeding the provisions of this code may be deemed to comply with the requirements of this code.

(3) The amendment of I.E.C.C. Section 302, Table 302.1, entitled Exterior Design Conditions., to change the table and footnote "a" to read as follows:

CONDITION	VALUE
Winter [a], design dry-bulb (°F) (99.6%)	17
Summer [a], design dry-bulb (°F) (0.4%)	100
Summer [a], design wet-bulb (°F) (0.4%)	78
Degree days heating [b]	2407
Degree days cooling [b]	2603
Climate zone [c]	5B

a. These values are from ASHRAE Handbook of Fundamentals for Dallas/Ft. Worth International Airport 99.6% Winter DB, 0.4% Summer DB, and 0.4% Summer WB; and from Local Climatological Data for Dallas-Ft. Worth published by the National Climatic Data Center, National Oceanic and Atmospheric Administration. These values are for the purpose of providing a uniform basis of requirements for North Central Texas. This will not preclude licensed professionals from submitting design analyses based on site measurements or published data more specific to the building site. Adjustments shall be permitted to reflect local climates which differ from the tabulated values, or local weather experience determined by the code official.

(4) The amendment of I.E.C.C. Section 302, Figures 302.1(1-43 and 45-51), entitled Design conditions., by deleting them in their entirety.

(5) The amendment of I.E.C.C. Section 502.1.1, entitled Moisture control., by revising Exception 2 to read as follows:

2. Buildings located in Climate Zones 1 through 9 as indicated in Table 302.1.

(6) The amendment of I.E.C.C. Section 502.1.5, entitled Fenestration solar heat gain coefficient., by adding the following exceptions:

Exceptions:

1. Any glazing facing within 45 degrees of true north;
2. Any glazing facing within 45 degrees of true south which is shaded along its full width by a permanent overhang with a projection factor of 0.3 or greater.
3. Any fenestration with attached screens where the screens have a rated shading coefficient of .6 or less.

(7) The amendment of Section 502.2, Table 502.2, entitled Heating and cooling criteria., to revise the table, footnote "a" and add footnote "g" to read as follows:

Table 502.2[a,g]
HEATING AND COOLING CRITERIA

Element	**Mode**	**Type A-1 Residential Buildings U_o**	**Type A-2 Residential Buildings U_o**
Walls	Heating or cooling	0.15	0.22
Roof/ceiling	Heating or cooling	0.03	0.03
Floors over unheated spaces	Heating or cooling	0.05	0.05
Heated slab on grade	Heating	R-value = 6	R-value = 6
Unheated slab on grade	Heating	R-value = 0	R-value = 0
Basement wall	Heating or cooling	U-factor = 0.15	U-factor = 0.15
Crawl space wall	Heating or cooling	U-factor = 0.15	U-factor = 0.15

a. The above values have been determined for all counties in the North Central Texas Council of Governments region.

(Exceptions b-g to remain the same.)

g. These requirements apply only to the boundaries of conditioned space. Air conditioning equipment is recommended, but not required, to be located within the conditioned space in North Central Texas zones.

(8) The amendment of I.E.C.C. Section 502.2, Figures 502.2(1-6), entitled Residential-Component Performance Approach., by deleting them in their entirety.

(9) The amendment of Section 502.2, Figure 502.2(7) entitled, Termite Infestation Probability Map., by adding a note to read as follows:

All counties within the North Central Texas Council of Governments region are designated as within the area of very heavy termite infestation probability for purpose of uniform interpretation of this requirement.

(10) The amendment of Section 502.2.4, Compliance by Prescriptive Specification on an Individual Component Basis., by deleting the references to Tables 502.2.4 (3-9).

(11) The deletion of prescriptive Tables 502.2.4(3-9) and the replacement of Tables 502.2.4(1) and 502.2.4(2) with the following tables:

Table 502.2.4(1)
Prescriptive Building Envelope Requirements, Type A-1 Residential Buildings, Based on Window Area as a Percent of Gross Exterior Wall Area (for zones 5b and 6b)

% Glazing	Maximum	Minimum					
	Glazing U-factor	Ceiling R-value	Exterior wall R-value	Floor R-value	Basement wall R-value	Slab perimeter R-value and depth	Crawl space wall R-value
≤8%	0.70	R-26	R-11	R-11	R-5	R-0	R-6
≤12%	0.65	R-26	R-13	R-11	R-5	R-0	R-5
≤15%	0.65	R-30	R-13	R-11	R-6	R-0	R-7
≤18%	0.52	R-30	R-13	R-19	R-6	R-0	R-7
≤20%	0.50	R-38	R-13	R-19	R-6	R-0	R-7
≤25%	0.46	R-38	R-16	R-19	R-6	R-0	R-7

Table 502.2.4(2)
Prescriptive Building Envelope Requirements, Type A-2 Residential Buildings, Based on Window Area as a Percent of Gross Exterior Wall Area

% Glazing	**Maximum**	**Minimum**					
	Glazing U-factor	**Ceiling R-value**	**Exterior wall R-value**	**Floor R-value**	**Basement wall R-value**	**Slab perimeter R-value and depth**	**Crawl space wall R-value**
≤20%	0.55	R-30	R-13	R-11	R-5	R-0	R-6
≤25%	0.55	R-30	R-13	R-11	R-5	R-0	R-5
≤30%	0.47	R-38	R-13	R-19	R-7	R-0	R-8

(12) The amendment of I.E.C.C. Section 503.3.3.3, entitled Duct and plenum insulation., to read as follows:

All supply and return-air ducts and plenums installed as part of an HVAC air-distribution system shall be thermally insulated in accordance with Table 503.3.3.3 or where such ducts or plenums operate at static pressures greater than 2 in. w.g. (500 Pa) in accordance with Section 503.3.3.4.1.

(13) The amendment of I.E.C.C. Section 503.3.3.4.1, entitled High- and medium-pressure duct systems., to read as follows:

503.3.3.4.1 High- and medium-pressure duct systems. All ducts and plenums operating at static pressures greater than 2 in. w.g. (500 Pa) shall be insulated and sealed in accordance with Section 803.2.8. Ducts operating at static pressures in excess of 3 in. w.g. (750 Pa) shall be leak tested in accordance with Section 803.3.6. Pressure classifications specific to the duct system shall be clearly indicated on the construction documents in accordance with the International Mechanical Code.

(14) The amendment of Section 503.3.3.4.2, entitled Low-pressure duct systems., to read as follows:

Low pressure duct systems. All longitudinal and transverse joints, seams and connections of supply and return ducts operating at static pressures less than or equal to 2 in. w.g. (500 Pa) shall be securely fastened and sealed with welds gaskets, mastics (adhesives), mastic-plus-embedded fabric systems or tapes installed in accordance with the manufacturer's installation instructions. Pressure classifications specific to the duct system shall be clearly indicated on the construction documents in accordance with the *International Mechanical Code*.

{Exception is unchanged}

(15) The amendment of Section 802.2; Tables 802.2 (1-4), and the deletion of Tables 802.2 (5-37) in their entirety:

TABLE 802.2(1)
BUILDING ENVELOPE REQUIREMENTS

WINDOW AND GLAZED DOOR AREA 10 PERCENT OR LESS OF ABOVE-GRADE WALL AREA			
ELEMENT	**CONDITION/VALUE (Zones 5B,6B)**		
Skylights (*U*-factor)	1		
Slab or below-grade wall (*R*-value)	R-0		
Windows and glass doors	**SHGC**		***U*-factor**
PF < 0.25	Any		Any
0.25 ≤ PF < 0.50	Any		Any
PF ≥ 0.50	Any		Any
Roof assemblies (*R*-value)	**Insulation between framing**		**Continuous insulation**
All-wood joist/truss	R-19		R-16
Metal joist/truss	R-25		R-17
Concrete slab or deck	NA		R-16
Metal purlin with thermal block	R-25		R-17
Metal purlin without thermal block	X		R-17
Floors over outdoor air or unconditioned space (*R*-value)	**Insulation between framing**		**Continuous insulation**
All-wood joist/truss	R-11		R-6
Metal joist/truss	R-11		R-6
Concrete slab or deck	NA		R-6
Above-grade walls (*R*-value)	**No framing**	**Metal framing**	**Wood framing**
Framed			
R-value cavity	NA	R-11	R-11
R-value continuous	NA	R-0	R-0
CMU, ≥ 8 in., with integral insulation			
R-value cavity	NA	R-0	R-0
R-value continuous	R-0	R-0	R-0
Other masonry walls			
R-value cavity	NA	R-0	R-0
R-value continuous	R-0	R-0	R-0

TABLE 802.2(2)
BUILDING ENVELOPE REQUIREMENTS

WINDOW AND GLAZED DOOR AREA OVER 10 PERCENT BUT NOT GREATER THAN 25 PERCENT OF ABOVE-GRADE WALL AREA			
ELEMENT	**CONDITION/VALUE**		
Skylights (*U*-factor)	1		
Slab or below-grade wall (*R*-value)	R-0		
Windows and glass doors	**SHGC**		***U*-factor**
PF < 0.25	0.6		Any
0.25 ≤ PF < 0.50	0.7		Any
PF ≥ 0.50	Any		Any
Roof assemblies (*R*-value)	**Insulation between framing**		**Continuous insulation**
All-wood joist/truss	R-25		R-19
Metal joist/truss	R-25		R-20
Concrete slab or deck	NA		R-19
Metal purlin with thermal block	R-30		R-20
Metal purlin without thermal block	X		R-20
Floors over outdoor air or unconditioned space (*R*-value)	**Insulation between framing**		**Continuous insulation**
All-wood joist/truss	R-11		R-6
Metal joist/truss	R-11		R-6
Concrete slab or deck	NA		R-6
Above-grade walls (*R*-value)	**No framing**	**Metal framing**	**Wood framing**
Framed			
R-value cavity	NA	R-11	R-11
R-value continuous	NA	R-0	R-0
CMU, ≥ 8 in., with integral insulation			
R-value cavity	NA	R-11	R-11
R-value continuous	R-5	R-0	R-0
Other masonry walls			
R-value cavity	NA	R-11	R-11
R-value continuous	R-5	R-0	R-0

TABLE 802.2(3)
BUILDING ENVELOPE REQUIREMENTS

WINDOW AND GLAZED DOOR AREA OVER 25 PERCENT BUT NOT GREATER THAN 40 PERCENT OF ABOVE-GRADE WALL AREA			
ELEMENT	**CONDITION/VALUE**		
Skylights (*U*-factor)	1		
Slab or below-grade wall (*R*-value)	R-0		
Windows and glass doors	**SHGC**		***U*-factor**
PF < 0.25	0.4		0.7
0.25 ≤ PF < 0.50	0.5		0.7
PF ≥ 0.50	0.6		0.7
Roof assemblies (*R*-value)	**Insulation between framing**		**Continuous insulation**
All-wood joist/truss	R-25		R-19
Metal joist/truss	R-25		R-20
Concrete slab or deck	NA		R-19
Metal purlin with thermal block	R-30		R-20
Metal purlin without thermal block	X		R-20
Floors over outdoor air or unconditioned space (*R*-value)	**Insulation between framing**		**Continuous insulation**
All-wood joist/truss	R-11		R-6
Metal joist/truss	R-11		R-6
Concrete slab or deck	NA		R-6
Above-grade walls (*R*-value)	**No framing**	**Metal framing**	**Wood framing**
Framed			
R-value cavity	NA	R-11	R-11
R-value continuous	NA	R-0	R-0
CMU, ≥ 8 in., with integral insulation			
R-value cavity	NA	R-11	R-11
R-value continuous	R-5	R-0	R-0
Other masonry walls			
R-value cavity	NA	R-11	R-11
R-value continuous	R-5	R-0	R-0

TABLE 802.2(4)
BUILDING ENVELOPE REQUIREMENTS

WINDOW AND GLAZED DOOR AREA OVER 40 PERCENT BUT NOT GREATER THAN 50 PERCENT OF ABOVE-GRADE WALL AREA			
ELEMENT	**CONDITION/VALUE**		
Skylights (*U*-factor)	1		
Slab or below-grade wall (*R*-value)	R-0		
Windows and glass doors	**SHGC**	***U*-factor**	
PF < 0.25	0.4	0.7	
0.25 ≤ PF < 0.50	0.5	0.7	
PF ≥ 0.50	0.6	0.7	
Roof assemblies (*R*-value)	**Insulation between framing**	**Continuous insulation**	
All-wood joist/truss	R-25	R-19	
Metal joist/truss	R-25	R-20	
Concrete slab or deck	NA	R-19	
Metal purlin with thermal block	R-30	R-20	
Metal purlin without thermal block	R-38	R-20	
Floors over outdoor air or unconditioned space (*R*-value)	**Insulation between framing**	**Continuous insulation**	
All-wood joist/truss	R-11	R-6	
Metal joist/truss	R-11	R-6	
Concrete slab or deck	NA	R-6	
Above-grade walls (*R*-value)	**No framing**	**Metal framing**	**Wood framing**
Framed			
R-value cavity	NA	R-13	R-11
R-value continuous	NA	R-3	R-0
CMU, ≥ 8 in., with integral insulation			
R-value cavity	NA	R-11	R-11
R-value continuous	R-5	R-0	R-0
Other masonry walls			
R-value cavity	NA	R-11	R-11
R-value continuous	R-5	R-0	R-0

(16) The amendment of I.E.C.C. Section 805.2.1, entitled Interior Lighting Controls., to read as follows:

805.2.1 Interior lighting controls. Each area enclosed by walls or floor-to-ceiling partitions shall have at least one manual control for the lighting serving that area. The required controls shall be located within the area served by the controls or be a remote switch that identifies the lights served and indicates their status. Large

spaces shall have a separate switch or control for each 2500 square feet of floor area.

(17) The amendment of Chapter 9, entitled Referenced Standards, by replacing to read as follows:

ASHRAE/IES -- 99 Energy Efficient Design of New Buildings Except Low-Rise Residential Buildings -- 1999 Edition

Section 1.05 <u>Adoption of Appendices</u>

The following referenced provisions of the I.B.C., I.R.C. and I.E.C.C. annexed hereto as appendices, the same being either attached hereto or incorporated herein by reference, are made a part of this Building Code.

<u>Appendix A</u>. Only Appendix C, entitled GROUP U-AGRICULTURAL BUILDINGS; Appendix E, entitled SUPPLEMENTARY ACCESSIBILITY REQUIREMENTS; Appendix F, entitled RODENT PROOFING; Appendix I, entitled PATIO COVERS and Appendix J, entitled SUPPLEMENTARY ACCESSIBILITY REQUIREMENTS FOR QUALIFIED HISTORIC BUILDINGS AND FACILITIES of the Appendix to the International Building Code, 2000 Edition.

All other Chapters of said Appendix to the I.B.C. are hereby omitted from this Building Code.

<u>Appendix B</u>. Only Appendix G, entitled SWIMMING POOLS, SPAS AND HOT TUBS, Appendix H, entitled PATIO COVERS and Appendix J, entitled EXISTING BUILDINGS AND STRUCTURES of the Appendix to the International Residential Code, 2000 Edition.

All other Chapters of said Appendix to the I.R.C. are hereby omitted from this Building Code.

Section 1.06 <u>Construction Prohibited in Private Drainage and/or Public Easements</u>

A. Regardless of materials, manner of construction or unique characteristics of land, it shall be unlawful for any person, firm or corporation to cause or permit the installation, revision or relocation of any construction improvement where any part of such improvement is to be located in a private drainage and/or public easement. The foregoing prohibition shall not apply to proposed improvements in utility easements consisting of paving, flatwork, wooden or chain link fences or retaining walls less than three feet (3') in height which do not support a structure,

provided that the proposed improvements have been approved in writing by the Building Official with the concurrence of the Director of Water Utilities prior to their construction.

B. In cases where improvements other than those listed in Subsection (A) above are proposed in public easements, application shall be made to the Building Official for the execution of an Easement Use Agreement. If, in the determination of the Building Official after conferring with the other appropriate departments of the City of Arlington, such Easement Use Agreement cannot be executed, the Building Official will refer the request to the Building Code Board of Appeals for final determination.

C. The City of Arlington shall not be liable for damages or losses of any kind whatsoever by reason of injury to property or person occasioned by the use of any easement. The City shall have no obligations in regards to the maintenance of any improvements within such easement or rights-of-way. The City shall be defended at the cost and expense of the person placing improvements in any easements or rights-of-way from all claims and demands. The use of any easement in rights-of-way shall be discontinued and improvements removed within 30 days of notification by the City and the cost of the discontinuation and removal of improvements shall be borne by the owner of the improvement.

D. The term "improvement" includes, but is not limited to, concrete or asphalt paving, swimming pools, fences, retaining walls, temporary or permanent buildings, earth fill or excavation and landscaping. "Improvements" shall not include public or private mailboxes, or poles and boxes necessary for public utility services.

The term "easement" shall include easements for right-of-way, streets, drainage and utilities.

Section 1.07 <u>Requirements for Drainage</u>

A. No person, firm, or corporation shall do, cause or permit to be done, the installation, modification, or relocation of any construction improvement where the improvement, when completed, will significantly impact other property. The other property may be either upstream or downstream from the property on which the improvement is to be made. The impact is primarily related to flooding of a building structure. The Building Official shall not issue a building permit where engineering data from a qualified professional

engineer or the opinion of the Department of Engineering Services reveals that such improvement would significantly worsen any known drainage or flooding problem.

B. The term "improvement" means any of those things which require a building permit, such as buildings (either permanent or temporary), land development, concrete or asphalt paving, swimming pools, fences, retaining walls, earth fill, or excavation and landscaping. "Improvement" shall not include poles or boxes necessary for public utility service.

C. Prior to obtaining a building permit, an acceptable site grading and drainage plan will be filed with the Building Inspections Department.

The purpose of the site grading plan is to ensure that all proposed structures are protected from a storm event having a 100-year recurrence interval. The plan shall assume a fully-developed watershed and shall account for all runoff that flows onto the site as well as runoff generated from the site.

See Design Criteria Manual for specific criteria regarding residential and commercial site grading plans.

Section 1.08 <u>Enforcement, Violations and Penalties</u>

A. It shall be unlawful for any person, firm or corporation to erect, construct, enlarge, alter, repair, move, improve, remove, convert, demolish, equip, use, occupy or maintain any building, structure or premises in the City of Arlington, or cause or permit the same to be done, contrary to or in violation of any of the provisions of this Building Code.

B. Any person, firm or corporation violating any of the provisions of this Building Code shall be deemed guilty of a misdemeanor and each day the violation continues shall be a separate offense. Each offense shall be punishable by a fine of not more than Two Thousand Dollars and No Cents ($2,000.00).

C. In addition to the power of the Building Official under I.B.C., Section 104.6, entitled "Right of Entry," to inspect a building pursuant to this Building Code, any peace officer may enter the public areas of any building or premises, or any areas specified in a proper inspection warrant, at all reasonable times wherever necessary in the performance of official duties to inspect and investigate for violations of any

law, or to enforce any law, including violations of this Building Code. The peace officer shall first present proper credentials and request entry, unless otherwise permitted by law. If such entry is refused or, if no owner or other person having charge or control of the building or premises can be located, the peace officer shall have recourse to every remedy provided by law to secure entry.

D. No owner, occupant or any other person having charge, care or control of any building or premises shall fail or neglect, after proper request is made pursuant to Subsection (C) above, to promptly permit entry therein by a peace officer in the performance of the peace officers duty. Any person violating this Subsection shall be guilty of a misdemeanor.

Section 1.09 <u>Skateboard Ramps</u>

A. As used in this Section, the phrase "skateboard ramp" shall refer to a structure or piece of work artificially built up or composed of parts joined together in some definite manner, regardless of the materials used or the manner of construction, which is primarily used for, or designed and intended for primary use as, a ramp for skating or skateboarding activities.

B. It shall be unlawful for any person to erect, construct, keep, maintain or use a skateboard ramp that is located:

(1) at a distance closer than one hundred fifty feet (150') from any building located on another's property that is used or intended to be used for habitation, regardless of whether the habitation existed prior to the erection of said skateboard ramp; or

(2) at a distance closer than fifty feet (50') from the property line of the lot where said skateboard ramp is located.

C. Should a habitation be placed on another's property closer than one hundred fifty feet (150') to an existing skateboard ramp, the owner of said skateboard ramp shall remove or relocate, or cause to be removed or relocated, said skateboard ramp within ninety (90) days of the completion of construction of the habitation.

D. Failure to remove or relocate, or cause to be removed or relocated, a skateboard ramp as required by this Section shall constitute a misdemeanor. Each day that

a skateboard ramp remains in violation of this Section shall constitute a separate offense.

Section 1.10 **Presumption**

Unless otherwise specified in this Chapter, the owner, occupant or person in control of any building or premises where any violation of this Building Code is found shall be prima facie responsible for such violation.

Further, Article IV, Registration, Permits and Inspections, is hereby amended by the amendment of **Section 4.01**, Registration, Subsection (F)(1), so that hereafter said subsection shall be and read as follows:

1. Forfeiting an appeal of a Stop Order issued under I.B.C. and I.R.C., Section 114, by continued work after the issuance of said Stop Order;

Further, Article IV is hereby amended by the amendment of **Section 4.01**, Subsection (G)(4), so that hereafter said subsection shall be and read as follows:

4. Accumulation within a period of twelve (12) months of two (2) forfeitures of appeals of Stop Orders issued under I.B.C. and I.R.C., Section 114, by continued work after the issuance of said Stop Orders.

Further, Article IV is hereby amended by the amendment of **Section 4.13**, Refunds, Subsection (D), so that hereafter said subsection shall be and read as follows:

D. **Other Inspections**. In addition to the required inspections specified in Subsection (C) above, the Building Official may make or require any other inspections of any construction work to ascertain compliance with the provisions of this Building Code and other applicable laws which are enforced by the City of Arlington.

For the purpose of determining compliance with I.B.C., Section 3402, and I.R.C. Appendix Chapter AJ104, the Building Official may cause any structure to be reinspected.

Further, Article IV is hereby amended by the amendment of **Section 4.14**, Certificate of Occupancy, Subsection (B),

so that hereafter said subsection shall be and read as follows:

B. Change in Use. Changes in the character of occupancy or use of a building shall not be made, except as specified in I.B.C., Section 3405.

Further, Article VII, Signs, is hereby amended by the amendment of **Section 7.07**, Structural Requirements, so that hereafter said section shall be and read as follows:

Section 7.07 Structural Requirements

A. Design and Stress Diagrams Required. Before a sign permit shall be granted, the applicant therefor shall submit to the Building Official a design and stress diagram or plan containing information as to the type, size, shape, location, construction and materials of the proposed sign, and such other pertinent information as the Building Official may deem necessary to determine that such sign complies with this Building Code and all other pertinent laws.

B. Wind Pressure. In the design and erection of all signs, the effect of wind shall be carefully considered. All signs shall be so constructed as to withstand wind pressure as specified in I.B.C., Section 1609.

C. Working Stresses.

(1) In any sign construction, the allowable working stresses shall conform to the requirements of I.B.C., Section 1604.

(2) The allowable working stresses for steel and wood shall be calculated in accordance with the provisions of I.B.C., Sections 2204 and 2304 - 2306, respectively.

(3) The working strength of chains, cables, guys or steel rods shall not exceed one-fifth (1/5) of the ultimate strength of such chains, cables, guys or steel rods.

Further, Article VII is hereby amended by the amendment of **Section 7.08**, Use of Plastic Materials, so that hereafter said section shall be and read as follows:

Section 7.08 **Use of Plastic Materials**

Other provisions of this Building Code notwithstanding, plastic materials which burn at a rate no faster than 2.5 inches per minute (64mm/s) when tested in accordance with ASTM D 635 shall be deemed approved plastics and may be used as the display surface material and for the letters, decorations and facings on signs and their structures.

Further, Article IX, Fences, is hereby amended by the amendment of **Section 9.02**, Enclosure of Swimming Pools, Spas and Hot Tubs, Subsection (E), so that hereafter said subsection shall be and read as follows:

E. Modifications

The Building Code Board of Appeals may make modifications in individual cases, upon a showing of good cause, with respect to the height, nature of location of the fence, wall, gates or latches, or the necessity therefor, provided the protection as sought hereunder or by Appendix G of the 2000 I.R.C. is not reduced thereby. Said Board may permit other protection devices or structures to be used so long as the degree of protection afforded by the substitute devices or structures is not less than the protection afforded by the substitute fence, gates and latch described herein, or in Appendix G of the 2000 I.R.C. as applicable.

Further, Article IX is hereby amended by the amendment of **Section 9.02**, Subsection (G)(2), so that hereafter said subsection shall be and read as follows:

2. There shall be no requirement of a culpable mental state for a violation of this Section or Appendix G, 2000 I.R.C.

Further, Article XIII, Outdoor Festivals, is hereby amended by the amendment of **Section 13.04**, Reports, Subsection (B), so that hereafter said subsection shall be and read as follows:

B. The departments listed in Subsection (A) above shall make a written report to the Building Official. The report shall state whether the preparations described in the application, if carried out, would be sufficient to protect the community and the persons attending the outdoor festival from health dangers, public safety and traffic control hazards, and to avoid violations of V.T.C.A., Health and Safety Code, Chapter 341.

2.

Any person, firm, corporation, agent or employee thereof who violates any of the provisions of this ordinance shall be guilty of a misdemeanor and upon conviction thereof shall be fined an amount not to exceed Two Thousand ($2000) dollars for each offense. Each day that a violation is permitted to exist shall constitute a separate offense.

3.

This ordinance shall be and is hereby declared to be cumulative of all other ordinances of the City of Arlington, and this ordinance shall not operate to repeal or affect any of such other ordinances except insofar as the provisions thereof might be inconsistent or in conflict with the provisions of this ordinance, in which event such conflicting provisions, if any, in such other ordinance or ordinances are hereby repealed.

4.

If any section, subsection, sentence, clause or phrase of this ordinance is for any reason held to be unconstitutional, such holding shall not affect the validity of the remaining portions of this ordinance.

5.

All of the regulations provided in this ordinance are hereby declared to be governmental and for the health, safety and welfare of the general public. Any member of the City Council or any City official or employee charged with the enforcement of this ordinance, acting for the City of Arlington in the discharge of his/her duties, shall not thereby render himself/herself personally liable; and he/she is hereby relieved from all personal liability for any damage that might accrue to persons or property as a result of any act required or permitted in the discharge of his/her said duties.

6.

Any violation of this ordinance can be enjoined by a suit filed in the name of the City of Arlington in a court of competent jurisdiction, and this remedy shall be in addition to any penal provision in this ordinance or in the Code of the City of Arlington.

7.

The caption of this ordinance shall be published in a newspaper of general circulation in the City of Arlington, in compliance with the provisions of Article VII, Section 15, of the City Charter. Further, this ordinance may be

published in pamphlet form and shall be admissible in such form in any court, as provided by law.

8.

This ordinance shall become effective ten (10) days after first publication except that the I.E.C.C. and Chapter 11 of the I.R.C. shall become effective September 1, 2002.

PRESENTED AND GIVEN FIRST READING on the 15th day of January, **2002**, at a regular meeting of the City Council of the City of Arlington, Texas; and GIVEN SECOND READING, passed and approved on the 5th day of February, **2002**, by a vote of 7 ayes and 1 nays at a regular meeting of the City Council of the City of **Arlington, Texas**.

ORDINANCE NO. 02-024

AN ORDINANCE AMENDING THE **"CONSTRUCTION"** CHAPTER OF THE CODE OF THE CITY OF ARLINGTON, TEXAS, 1987, THROUGH THE AMENDMENT OF **ARTICLE I**, ENTITLED BUILDING CODE, BY THE ADDITION OF **SECTION 1.11**, TRASH RECEPTACLES, RELATIVE TO REGULATIONS REGARDING THE PROVISION OF TRASH RECEPTACLES AT ALL JOB SITES; BY THE ADDITION OF **SECTION 1.12**, HOURS OF CONSTRUCTION, RELATIVE TO SETTING HOURS OF CONSTRUCTION; PROVIDING FOR A FINE OF UP TO $2000 FOR EACH OFFENSE IN VIOLATION OF THE ORDINANCE; PROVIDING THIS ORDINANCE BE CUMULATIVE; PROVIDING FOR SEVERABILITY; PROVIDING FOR GOVERNMENTAL IMMUNITY; PROVIDING FOR INJUNCTIONS; PROVIDING FOR PUBLICATION AND BECOMING EFFECTIVE TEN DAYS AFTER FIRST PUBLICATION

BE IT ORDAINED BY THE CITY COUNCIL OF THE CITY OF ARLINGTON, TEXAS:

1.

That the **"Construction"** Chapter of the Code of the City of Arlington, Texas, 1987, is hereby amended through the addition of **Section 1.11**, Trash Receptacles, so that hereafter said section shall be and read as follows:

Section 1.11 Trash Receptacles

All development for which a building permit is issued shall provide a trash receptacle capable of depositing, containing, and collecting refuse. The container shall be constructed or provided to prohibit trash from blowing or being displaced. Trash bins may be of a commercial type designated by the City Collector. If constructed on site, the minimum dimensions shall be eight feet in both width and length by four feet in depth (8'x8'x4'). Enclosed construction trailers located on-site may satisfy this requirement. Permits and inspections may be withheld in situations where trash is not properly contained.

Further, Article I is hereby amended by the addition of **Section 1.12**, Hours of Construction, so that hereafter said section shall be and read as follows:

Section 1.12 Hours of Construction

Outdoor construction activities for projects supervised by building permits shall be prohibited, if located within three hundred (300') feet of property used for residential purposes, during the following times:

(1) During the hours of 6:00 p.m. to 7:00 a.m. Central Standard Time.

(2) During the hours of 8:00 p.m. to 7:00 a.m. Central Daylight Savings Time.

EXCEPTION: Homeowners performing work when acting as their own contractor.

The prohibition of outdoor construction activities may be appealed in writing to the building official. The building official may take into consideration the proximity of the proposed outdoor construction activities with adjacent residential uses and grant an exception to the prohibition. The building official may require the appellant to submit such information as needed to assist in the determination of residential adjacency. The building official must reply to the appellant within five (5) days of receipt of the appeal. Decisions of the building official may be appealed to the Building Code Board of Appeals as outlined in the Construction Ordinance.

2.

Any person, firm, corporation, agent or employee thereof who violates any of the provisions of this ordinance shall be guilty of a misdemeanor and upon conviction thereof shall be fined an amount not to exceed Two Thousand ($2000) dollars for each offense. Each day that a violation is permitted to exist shall constitute a separate offense.

3.

This ordinance shall be and is hereby declared to be cumulative of all other ordinances of the City of Arlington, and this ordinance shall not operate to repeal or affect any of such other ordinances except insofar as the provisions thereof might be inconsistent or in conflict with the provisions of this ordinance, in which event such conflicting provisions, if any, in such other ordinance or ordinances are hereby repealed.

4.

If any section, subsection, sentence, clause or phrase of this ordinance is for any reason held to be unconstitutional, such holding shall not affect the validity of the remaining portions of this ordinance.

5.

All of the regulations provided in this ordinance are hereby declared to be governmental and for the health, safety and welfare of the general public. Any member of the City Council or any City official or employee charged with the enforcement of this ordinance, acting for the City of Arlington in the discharge of his/her duties, shall not thereby render himself/herself personally liable; and he/she is hereby relieved from all personal liability for any damage that might accrue to persons or property as a result of any act required or permitted in the discharge of his/her said duties.

6.

Any violation of this ordinance can be enjoined by a suit filed in the name of the City of Arlington in a court of competent jurisdiction, and this remedy shall be in addition to any penal provision in this ordinance or in the Code of the City of Arlington.

7.

The caption of this ordinance shall be published in a newspaper of general circulation in the City of Arlington, in compliance with the provisions of Article VII, Section 15, of the City Charter. Further, this ordinance may be published in pamphlet form and shall be admissible in such form in any court, as provided by law.

8.

This ordinance shall become effective ten (10) days after first publication.

PRESENTED AND GIVEN FIRST READING on the 1**5th** day of **January**, **2002**, at a regular meeting of the City Council of the City of Arlington, Texas; and GIVEN SECOND READING, passed and approved on the **12th** day of **February**, **2002**, by a vote of **8** ayes and **0** nays at a regular meeting of the City Council of the City of Arlington, Texas.

ORDINANCE NO. 02-074

AN ORDINANCE AMENDING THE **"CONSTRUCTION"** CHAPTER OF THE CODE OF THE CITY OF ARLINGTON, TEXAS, 1987, THROUGH THE AMENDMENT OF **ARTICLE IV**, ENTITLED REGISTRATION, PERMITS AND INSPECTIONS, BY THE AMENDMENT OF **SECTION 4.16**, ENTITLED PERMITS FOR DEMOLITION OR RELOCATION, **SUBSECTION (A)**, ENTITLED BUILDINGS OR STRUCTURES THAT ARE FIFTY (50) YEARS OLD OR OLDER, AND BUILDINGS OR STRUCTURES OF UNKNOWN AGE, **PARAGRAPH (7)**, ENTITLED STAY EXTENDED BY CITY COUNCIL, TO MODIFY THE PROCESS THROUGH WHICH THE CITY COUNCIL MAY EXTEND THE STAY, INCREASING THE TOTAL TIME THAT CITY COUNCIL MAY IMPOSE THE STAY TO NINETY DAYS, AND INCREASING THE MAXIMUM TIME PERIOD FOR A STAY ON A DEMOLITION PERMIT TO A CUMULATIVE TOTAL OF ONE HUNDRED FIFTY DAYS; PROVIDING FOR A FINE OF UP TO $2,000 FOR EACH OFFENSE IN VIOLATION OF THE ORDINANCE; PROVIDING THIS ORDINANCE BE CUMULATIVE; PROVIDING FOR SEVERABILITY; PROVIDING FOR GOVERNMENTAL IMMUNITY; PROVIDING FOR INJUNCTIONS; PROVIDING FOR PUBLICATION AND BECOMING EFFECTIVE TEN DAYS AFTER FIRST PUBLICATION

BE IT ORDAINED BY THE CITY COUNCIL OF THE CITY OF ARLINGTON, TEXAS:

1.

That the **"Construction"** Chapter of the Code of the City of Arlington, Texas, 1987, is hereby amended through the amendment of **Article IV**, Registration, Permits and Inspections, by the amendment of **Section 4.16**, Permits for Demolition or Relocation, **Subsection (A)**, Buildings Or Structures That Are Fifty (50) Years Old Or Older, and Buildings Or Structures Of Unknown Age, **Paragraph (7)**, Stay Extended By City Council, so that hereafter said provision shall be and read as follows:

7. Stay Extended by City Council. Prior to the expiration of the stay period imposed by the Landmark Preservation Commission, the Landmark Preservation Commission may issue a recommendation to the City Council requesting that the stay be extended. After notice to the applicant and a public hearing, the City Council may extend the stay upon a finding that there are reasonable grounds for preservation as well as a reasonable expectation of preserving the building or structure. It shall be the responsibility of the Landmark Preservation Commission and any other proponent of extending the stay on a demolition permit application to demonstrate to the City Council's satisfaction that there exist reasonable

grounds for preservation as well as a reasonable expectation of preserving the building or structure.

The City Council may extend the stay on one or more occasions, after notice to the applicant and a public hearing, in such increments of time as the City Council may determine reasonable. Any extension of the stay on a demolition permit or combination of extensions imposed by the City Council under this provision shall not exceed a cumulative total of ninety (90) days in duration.

In instances where the City Council imposes an extension of the stay for a time period of less than ninety (90) days, the Landmark Preservation Commission may request additional extensions of the stay up to a cumulative total of ninety (90) days from the City Council. Any such request must be submitted to, and acted upon by, the City Council prior to the expiration of any stay period previously imposed by the City Council. The Landmark Preservation Commission shall report to City Council concerning its efforts to preserve the building or structure as a prerequisite to the extension of any stay imposed by the City Council.

In no event shall the stay on a demolition permit and any extensions thereto exceed a total of one hundred fifty (150) days from the date the application for a permit to demolish or relocate a building or structure was filed. If City Council takes no action on the Landmark Preservation Commission's request for an extension within the original stay period or any subsequent extension thereof, a Certificate of Demolition or Relocation shall be deemed issued at the expiration of such stay period.

2.

Any person, firm, corporation, agent or employee thereof who violates any of the provisions of this ordinance shall be guilty of a misdemeanor and upon conviction thereof shall be fined an amount not to exceed Two Thousand and No/100 Dollars ($2,000) for each offense. Each day that a violation is permitted to exist shall constitute a separate offense.

3.

This ordinance shall be and is hereby declared to be cumulative of all other ordinances of the City of Arlington, and this ordinance shall not operate to repeal or affect any of such other ordinances except insofar as the provisions thereof might be inconsistent or in conflict with the provisions of this ordinance, in which event such conflicting provisions, if any, in such other ordinance or ordinances are hereby repealed.

4.

If any section, subsection, sentence, clause or phrase of this ordinance is for any reason held to be unconstitutional, such holding shall not affect the validity of the remaining portions of this ordinance.

5.

All of the regulations provided in this ordinance are hereby declared to be governmental and for the health, safety and welfare of the general public. Any member of the City Council or any City official or employee charged with the enforcement of this ordinance, acting for the City of Arlington in the discharge of his/her duties, shall not thereby render himself/herself personally liable; and he/she is hereby relieved from all personal liability for any damage that might accrue to persons or property as a result of any act required or permitted in the discharge of his/her said duties.

6.

Any violation of this ordinance can be enjoined by a suit filed in the name of the City of Arlington in a court of competent jurisdiction, and this remedy shall be in addition to any penal provision in this ordinance or in the Code of the City of Arlington.

7.

The caption and penalty clause of this ordinance shall be published in a newspaper of general circulation in the City of Arlington, in compliance with the provisions of Article VII, Section 15, of the City Charter. Further, this ordinance may be published in pamphlet form and shall be admissible in such form in any court, as provided by law.

8.

This ordinance shall become effective ten (10) days after first publication as described above.

PRESENTED AND GIVEN FIRST READING on the **25th** day of **June**, **2002**, at a regular meeting of the City Council of the City of Arlington, Texas; and GIVEN SECOND READING, passed and approved on the **16th** day of **July**, **2002**, by a vote of **8** ayes and **0** nays at a regular meeting of the City Council of the City of **Arlington, Texas**.

ORDINANCE NO. 03-087

AN ORDINANCE AMENDING THE **"CONSTRUCTION"** CHAPTER OF THE CODE OF THE CITY OF ARLINGTON, TEXAS, 1987, THROUGH THE AMENDMENT OF **ARTICLE IV**, REGISTRATION, PERMITS AND INSPECTIONS, **SECTION 4.14**, CERTIFICATE OF OCCUPANCY, BY THE ADDITION OF SUBSECTION G, RELATIVE TO PERMITS, INSPECTIONS, CERTIFICATES AND APPROVALS FOR SEXUALLY ORIENTED BUSINESSES; PROVIDING THIS ORDINANCE BE CUMULATIVE; PROVIDING FOR SEVERABILITY, GOVERNMENTAL IMMUNITY, INJUNCTIONS, PUBLICATION AND AN EFFECTIVE DATE

BE IT ORDAINED BY THE CITY COUNCIL OF THE CITY OF ARLINGTON, TEXAS:

1.

That the **"Construction"** Chapter of the Code of the City of Arlington, Texas, 1987, is hereby amended through the amendment of Article IV, Registration, Permits and Inspections, **Section 4.14**, Certificate of Occupancy, by the addition of Subsection G, so that hereafter said subsection shall be and read as follows:

G. Permits, Inspections, Certificates and Approvals for Sexually Oriented Businesses. The provisions of Subsections 4.01 (H), (I) and (J) of the Sexually Oriented Business Chapter of the Code of the City of Arlington, Texas, 1987, apply and prevail over any provision of this Construction Chapter with respect to the processing of applications, permits, inspections, certificates and approvals regarding sexually oriented businesses.

2.

This ordinance shall be and is hereby declared to be cumulative of all other ordinances of the City of Arlington, and this ordinance shall not operate to repeal or affect any of such other ordinances except insofar as the provisions thereof might be inconsistent or in conflict with the provisions of this ordinance, in which event such conflicting provisions, if any, in such other ordinance or ordinances are hereby repealed.

3.

If any section, subsection, sentence, clause or phrase of this ordinance is for any reason held to be unconstitutional, such holding shall not affect the validity of the remaining portions of this ordinance.

4.

All of the regulations provided in this ordinance are hereby declared to be governmental and for the health, safety and welfare of the general public. Any member

of the City Council or any City official or employee charged with the enforcement of this ordinance, acting for the City of Arlington in the discharge of his/her duties, shall not thereby render himself/herself personally liable; and he/she is hereby relieved from all personal liability for any damage that might accrue to persons or property as a result of any act required or permitted in the discharge of his/her said duties.

5.

Any violation of this ordinance can be enjoined by a suit filed in the name of the City of Arlington in a court of competent jurisdiction, and this remedy shall be in addition to any penal provision in this ordinance or in the Code of the City of Arlington.

6.

The caption of this ordinance shall be published in a newspaper of general circulation in the City of Arlington, in compliance with the provisions of Article VII, Section 15, of the City Charter. Further, this ordinance may be published in pamphlet form and shall be admissible in such form in any court, as provided by law.

7.

This ordinance shall become effective ten (10) days after first publication as described above.

PRESENTED AND GIVEN FIRST READING on the **22nd** day of **July**, **2003**, at a regular meeting of the City Council of the City of Arlington, Texas; and GIVEN SECOND READING, passed and approved on the **29th** day of **July**, **2003**, by a vote of **9** ayes and **0** nays at a regular meeting of the City Council of the City of **Arlington, Texas**.

ORDINANCE NO. 04-004

AN ORDINANCE AMENDING THE **"CONSTRUCTION"** CHAPTER OF THE CODE OF THE CITY OF ARLINGTON, TEXAS, 1987, THROUGH THE AMENDMENT OF **ARTICLE I**, BUILDING CODE, **SECTION 1.02**, RELATIVE TO THE ADDITION OF THE 2001 SUPPLEMENT TO THE INTERNATIONAL ENERGY CONSERVATION CODE; **SECTION 1.04(C)**, RELATIVE TO AMENDMENTS TO THE INTERNATIONAL BUILDING CODE; **SECTION 1.04(D)**, RELATIVE TO AMENDMENTS TO THE INTERNATIONAL RESIDENTIAL CODE; **SECTION 1.04(E)(5)**, RELATIVE TO AMENDMENTS TO THE INTERNATIONAL ENERGY CONSERVATION CODE; **SECTION 1.06(B)**, RELATIVE TO APPEAL OF THE BUILDING OFFICIAL'S DETERMINATION REGARDING AN EASEMENT USE AGREEMENT; AND **SECTION 1.06(C)**, RELATIVE TO TERMINATION AND MODIFICATION OF AN EASEMENT USE AGREEMENT; THROUGH THE AMENDMENT OF **ARTICLE IV**, REGISTRATION, PERMITS AND INSPECTIONS, BY THE AMENDMENT OF **SECTION 4.01(I)**, RELATIVE TO REGISTRATION EXEMPTIONS FOR OWNERS; **SECTION 4.05** BY THE ADDITION OF SUBSECTION **(D)**, RELATIVE TO THE ISSUANCE OF A FIELD PERMIT CARD**;** **SECTION 4.13(C)**, BY THE ADDITION OF A NEW SUBSECTION **(3)**, RELATIVE TO AN ENERGY INSPECTION; **SECTION 4.14(C)**, RELATIVE TO SEXUALLY ORIENTED BUSINESSES; **SECTION 4.14**, BY THE ADDITION OF SUBSECTION **(H)**, RELATIVE TO APPLICATIONS FOR CERTIFICATES OF OCCUPANCY; THROUGH THE AMENDMENT OF **SECTION 4.15**, RELATIVE TO INDEMNIFICATION; THROUGH THE AMENDMENT OF **SECTION 4.16**, RELATIVE TO DANGEROUS BUILDING DEMOLITION AND MUNICIPAL COURT AUTHORITY; THROUGH THE AMENDMENT OF **ARTICLE XVI** RELATIVE TO DEFINITIONS, DEMOLITION HEARINGS, MUNICIPAL COURT HEARING AUTHORITY, ENCLOSURE OF SWIMMING POOLS, SURETY BONDS, AND CITY COLLECTION OF EXPENSES; THROUGH THE AMENDMENT OF **ARTICLE XVII**, ADDITIONAL AUTHORITY TO SECURE BUILDING, RELATIVE TO DESIGNATION OF ADMINISTRATOR; THROUGH THE AMENDMENT OF **ARTICLE XVIII**, PERFORMANCE OF WORK AND RECOVERY OF COST, RELATIVE TO COLLECTION OF CITY EXPENSES AND LIENS; PROVIDING FOR A FINE OF UP TO $2000 FOR EACH OFFENSE IN VIOLATION OF THE

ORDINANCE; PROVIDING THIS ORDINANCE BE CUMULATIVE; PROVIDING FOR SEVERABILITY; PROVIDING FOR GOVERNMENTAL IMMUNITY; PROVIDING FOR INJUNCTIONS; PROVIDING FOR PUBLICATION AND BECOMING EFFECTIVE TEN DAYS AFTER FIRST PUBLICATION

BE IT ORDAINED BY THE CITY COUNCIL OF THE CITY OF ARLINGTON, TEXAS:

1.

That the **"Construction"** Chapter of the Code of the City of Arlington, Texas, 1987, is hereby amended through the amendment of Article I, Building Code, **Section 1.02**, Adoption of Code, so that hereafter said section shall be and read as follows:

Section 1.02 Adoption of Code

The International Building Code, 2000 Edition (hereinafter called "I.B.C."); the International Residential Code, 2000 Edition (hereinafter called "I.R.C."); and the International Energy Conservation Code, 2000 Edition and 2001 Supplement to the International Energy Conservation Code (hereinafter called "I.E.C.C."); as published by the International Code Council, Inc. are hereby adopted and designated, together with the deletions, amendments and addenda hereinafter contained, as the Building Code of the City of Arlington, the same as though said I.B.C., I.R.C. and I.E.C.C. were copied at length herein. Copies of the I.B.C., I.R.C. and I.E.C.C. and its Appendices shall be kept on file in the Office of the City Secretary.

Further, Article I, **Section 1.04**, Subsection (C), is hereby amended so that hereafter said subsection shall be and read as follows:

C. The amendment of the following I.B.C. provisions:

(1) The amendment of Section 101.2, entitled Scope, by the addition of the following "EXCEPTION":

EXCEPTION: Storage buildings not exceeding three hundred twenty (320) square feet in area shall not be subject to the provisions of this Building Code provided:

(a) The building shall not be intended or used for human occupancy;

(b) Any mechanical, electrical or plumbing work shall be installed in full compliance with

the appropriate Chapter of the Code of the City of Arlington for such work;

(c) A building on commercial property shall be anchored at each corner: said anchorage shall equal or exceed a concrete pier ten inches (10") in diameter and eighteen inches (18") in depth embedded with a standard one-half inch (½") diameter anchor bolt;

(d) The building shall be not closer than five feet (5') to a property line in residential areas and ten feet (10') to a property line in non-residential areas: subject, however, to any more restrictive setbacks contained in the "Zoning" Chapter of the Code of the City of Arlington: further, storage buildings on commercial property shall be separated from other structures and property lines as specified by I.B.C., Chapter 5;

(e) The building shall be maintained in good repair;

(f) There shall be not more than one (1) such building on any property occupied for other than residential use; and

(g) A permit for such building shall have been obtained from the Building Official.

(2) The amendment of Section 101.4, entitled Referenced Codes., to read as follows:

101.4 Referenced Codes. The other codes listed in Sections 101.4 through 101.4.7 and referenced elsewhere in this code, when specifically adopted, shall be considered part of the requirements of this code to the prescribed extent of each such reference. Whenever amendments have been adopted to the referenced codes and standards, each reference to said code and standard shall be considered to reference the amendments as well. Any reference to NFPA 70 or the ICC Electrical Code shall mean the Electrical Code as adopted.

(3) The amendment of Section 103.1, entitled Creation of Enforcement Agency., to read as follows:

103.1 Creation of enforcement agency. The Building Inspections Division is hereby created and the official in charge thereof shall be known as the Building Official.

(4) The amendment of Section 104.6, entitled Right of Entry, to read as follows:

Whenever necessary to make an inspection to enforce any of the provisions of this Building Code, or whenever the Building Official or an authorized representative has reasonable cause to believe that there exists in any building or upon any premises any condition or violation which makes such building or premises unsafe, dangerous or hazardous, the Building Official or an authorized representative may enter such building or premises at all reasonable times to inspect the same or to perform any duty imposed upon said Building Official by this Building Code. If such building or premises be occupied, the Building Official shall first present proper credentials and request entry. If such building or premises be unoccupied, the Building Official shall first make a reasonable effort to locate the owner or other person having charge or control of the building or premises and request entry. If such entry is refused, or, if no owner or other person having charge or control of the building or premises can be located, the Building Official or an authorized representative shall have recourse to every remedy provided by law to secure entry.

(5) The addition of Section 104.12, entitled Occupancy Violations., to read as follows:

104.12 Occupancy Violations. Whenever any building, structure, or equipment therein which is regulated by this Building Code is being used contrary to the provisions of said Code, the Building Official or an authorized representative may order that such use be discontinued and/or that the building or structure, or a portion thereof, be vacated by written notice served on any person who is causing such use to be continued. Further, the Building Official or an authorized representative may order the evacuation of any building or premises, or a portion thereof, which constitutes a dangerous building as defined in Article XVII of this Chapter.

Notice to stop use shall be given by personal delivery or by certified mail, return receipt requested, to the person responsible for the continued use. Such person shall discontinue the use within the time prescribed by the Building Official after receipt of such notice and shall not resume the use of the building or premises

until first rendering the same in compliance with this Building Code.

Notice to vacate a dangerous building or premises shall be posted at or upon each exit of the said structure affected thereby, and shall be in substantially the following form:

"DO NOT ENTER
UNSAFE TO OCCUPY

It is a misdemeanor to occupy this building, or to remove or deface this notice.

Arlington Building Official
(by)_____
(date)_____
(compliance due date)_____"

No person shall remain in or enter any building or premises which has been so posted, except that entry may be made to repair, demolish or remove the unsafe condition. Such entry or the destruction, defacing or removal of said notice prior to approval by the Building Official or an authorized representative shall be a violation of this Building Code.

(6) The amendment of Section 106.1, entitled Submittal documents., amending the second sentence to read as follows:

The construction documents shall be prepared by a Texas Licensed Engineer or Architect as required by this ordinance or by State law.

(7) The amendment of Section 202, entitled Definitions., adding a new definition to read as follows:

HIGH-RISE BUILDING is a building having floors used for human occupancy located more than 75 feet (22 860 mm) above the lowest level of fire department vehicle access.

(8) The amendment of Section 202 adding the definition of "SHALL" to read as follows:

SHALL, as it applies to an act or duty to be performed by the Building Official pursuant to any section of this Building Code, is discretionary.

Its use in all other applications in this Code shall be mandatory.

(9) The amendment of Table 302.3.3., footnote e, to read as follows:

e. Assembly uses accessory to Group E Occupancy must comply within the provisions for Group A Occupancy but for the purpose of Section 302.3 are not considered separate occupancies.

(10) The amendment of Section 403.1, exception #3: to read as follows:

3. Buildings with an occupancy in Group A-5 in accordance with Section 303.1, when used for open air seating; however, this exception does not apply to accessory uses including but not limited to sky boxes, restaurants and similarly enclosed areas.

(11) The amendment of Section 403.2, by the deletion of exception #2 in its entirety.

(12) The amendment of Section 406.6.1, entitled General., adding a second paragraph to read as follows:

This occupancy shall include garages involved in servicing of motor vehicles for items such as lube changes, inspections, windshield repair or replacement, shocks, minor part replacement and other such non-major repair. When the repair garage is only involved in such minor repair, it need not comply with Section 406.6.2.

(13) The amendment of Section 411.4, entitled Automatic sprinklers., to read as follows:

411.4 Automatic sprinklers. An automatic sprinkler system shall be installed in all amusement buildings (as defined in this code). The main water-flow switch shall be electrically supervised. The sprinkler main cutoff valve shall be supervised.

EXCEPTION: An automatic sprinkler system need not be provided for amusement buildings actually operating not more than thirty (30) consecutive days.

(14) The amendment of Section 506.2.2, entitled Open space limits., adding a sentence to read as follows:

In order to be considered as accessible, if not in direct contact with a street or fire lane, a minimum 10 foot wide pathway from the street or approved fire lane must be provided. (See Fire Code Section 503.1.1 for the hose lay measurement pathway requirements.)

(15) The amendment of Table 602, entitled FIRE-RESISTIVE RATING REQUIREMENTS FOR EXTERIOR WALLS BASED ON FIRE SEPARATION DISTANCE[a]., to insert footnote d. to the heading "GROUP A, B, E, F-2, I, R[bd], S-2, U[d]" to read as follows:

d. For one- and two-family dwellings and apartment buildings, open metal carport structures may be constructed within zero (0) feet of the property line without fire-resistive or opening protection when the location of such is approved as required by other City ordinances.

(16) The amendment of Section 705.11, entitled Ducts and air transfer openings., to amend the Exception to read as follows:

EXCEPTION: For other than hazardous exhaust ducts, penetrations by ducts and air transfer openings of fire walls that are not on a lot line shall be allowed provided the penetrations comply with Sections 711 and 715. The size and aggregate width of all openings shall not exceed the limitations of Section 705.8.

(17) The amendment of Section 715.5.2, entitled Fire barriers., to add exception #4 to read as follows:

4. In the duct penetration of the separation between the private garage and its residence when constructed in accordance with Section 302.3.3, exceptions #2 and 3.

(18) The amendment of Section 903.1.2, entitled Residential systems., to read as follows:

903.1.2 Residential systems. Unless specifically allowed by this code, residential sprinkler systems installed in accordance with NFPA 13D or NFPA 13R shall not be recognized for the purposes of exceptions or reductions, commonly referred to as "trade-offs", permitted by other requirements of this code.

(19) The amendment of Section 903.2.1.1, entitled Group A-1., to read as follows:

903.2.1.1 Group A-1. An automatic sprinkler system shall be provided for Group A-1 Occupancies where one of the following conditions exist:

1. The fire area exceeds 12,000 square feet (1115 m^2).
2. The fire area has an occupant load of 300 or more.
3. The fire area is located on a floor other than the level of exit discharge.
4. The fire area contains a multi theater complex.

(20) The amendment of Section 903.2.1.2, entitled Group A-2., to read as follows:

903.2.1.2 Group A-2. An automatic sprinkler system shall be provided for a Group A-2 Occupancies where one of the following conditions exist:

1. The fire area exceeds 5,000 square feet (464.5 m^2).
2. The fire area has an occupant load of 300 or more.
3. The fire area is located on a floor other than the level of exit discharge.

(21) The amendment of Section 903.2.1.3, entitled Group A-3., to read as follows:

903.2.1.3 Group A-3. An automatic sprinkler system shall be provided for Group A-3 Occupancies where one of the following conditions exist:

1. The fire area exceeds 12,000 square feet (1115 m^2).
2. The fire area has an occupant load of 300 or more.
3. The fire area is located on a floor other than the level of exit discharge.

EXCEPTION: Areas used exclusively as participant sports areas where the main floor area is located at the same level as the level of exit discharge of the main entrance and exit.

(22) The amendment of Section 903.2.1.4, entitled Group A-4., to read as follows:

903.2.1.4 Group A-4. An automatic sprinkler system shall be provided for Group A-4 Occupancies where one of the following conditions exist:

1. The fire area exceeds 12,000 square feet (1115 m^2).
2. The fire area has an occupant load of 300 or more.
3. The fire area is located on a floor other than the level of exit discharge.

EXCEPTION: Areas used exclusively as participant sports areas where the main floor area is located at the same level as the level of exit discharge of the main entrance and exit.

(23) The amendment of Section 903.2.7, entitled Group R-1., to read as follows:

903.2.7 Group R-1. An automatic sprinkler system shall be provided throughout buildings with a Group R-1 fire area. For the purpose of establishing automatic sprinkler requirements of this section, fire walls as described in I.B.C., Section 705, shall not constitute separate buildings.

EXCEPTIONS:
1. Where guestrooms are not located more than two stories in height and the building contains less than 20 guest rooms.
2. A residential sprinkler system installed in accordance with Section 903.3.1.2 shall be allowed in buildings of Group R-1.

(24) The amendment of Section 903.2.8, entitled Group R-2., to read as follows:

903.2.8 Group R-2. An automatic sprinkler system shall be provided throughout all buildings with a Group R-2 fire area where any of the following conditions apply:

1. The R-2 is located more than two stories in height, including basements; or
2. The building contains more than 16 dwelling units; or
3. The building contains fraternities and sororities with an occupant load of more than 10.

EXCEPTION: A residential sprinkler system installed in accordance with Section 903.3.1.2 shall be permitted in buildings of Group R-2. For the purpose of establishing automatic sprinkler requirements of this section, fire walls as described in I.B.C., Section 705 shall not constitute separate buildings.

(25) The addition of Section 903.2.10.3, entitled Self-service storage facility., to read as follows:

903.2.10.3 Self service storage facility. An automatic sprinkler system shall be installed throughout all self-service storage facilities.

EXCEPTION: One story self-service storage facilities, that have no interior corridors, with a one-hour fire barrier wall installed between every storage compartment.

(26) The amendment of Section 903.2.12, entitled All occupancies except Groups R-3 and U., to amend the exception to read as follows:

EXCEPTION: Group R-3 as applicable in Section 101.2 with approved fire department access and Group U occupancies, an automatic sprinkler system shall be installed.

(27) The amendment of Section 903.2.12.3, entitled Buildings over 55 feet in height., to read as follows:

903.2.12.3 Buildings over two stories in height. An automatic sprinkler system shall be installed throughout buildings, other than penthouses in compliance with Section 1509, 3 stories or more in height.

EXCEPTION: Open parking structures in compliance with Section 406.3.

(28) The addition of Section 903.2.12.4, entitled High-Piled Combustible Storage., to read as follows:

903.2.12.4 High-Piled Combustible Storage. For any building with a clear height exceeding 12 feet (4572 mm), see Chapter 23 of the Fire Code to determine if those provisions apply.

(29) The addition of Section 903.2.12.5, entitled Spray Booths and Rooms., to read as follows:

903.2.12.5 Spray Booths and Rooms. New and existing spray booths and spraying rooms shall be protected by an approved automatic fire-extinguishing system.

(30) The amendment of Section 903.3.1.1.1, entitled Exempt locations., to read as follows:

903.3.1.1.1 Exempt locations. When approved by the code official, automatic sprinklers shall not be required in the following rooms or areas where such rooms or areas are protected with an approved automatic fire detection system in accordance with Section 907.2 that will respond to visible or invisible particles of combustion. Sprinklers shall not be omitted from any room merely because it is damp, of fire-resistance-rated construction or contains electrical equipment.

1. Any room where the application of water, or flame and water, constitutes a serious life or fire hazard.
2. Any room or space where sprinklers are considered undesirable because of the nature of the contents, when approved by the code official.
3. Generator and transformer rooms, under the direct control of a public utility, separated from the remainder of the building by walls and floor/ceiling or roof/ceiling assemblies having a fire-resistance rating of not less than two hours.

(31) The amendment of Section 903.3.1.2, entitled NFPA 13R sprinkler systems., to read as follows:

903.3.1.2 NFPA 13R sprinkler system. Where allowed in buildings of Group R, up to and including four stories in height, automatic sprinkler systems shall be hydraulically calculated within the dwelling unit in accordance with NFPA 13R. Sprinkler protection shall be provided throughout, including the means of egress, patios, bathrooms, closets, balconies and attics.

(32) The amendment of Section 903.3.1.3, entitled NFPA 13D sprinkler systems., to read as follows:

903.3.1.3 NFPA 13D sprinkler systems. Non-required automatic sprinkler systems in one and two-family dwellings and manufactured homes may be installed in accordance with NFPA 13D.

(33) The amendment of Section 903.3.5, entitled Water supplies., to add a second paragraph to read as follows:

Water supply as required for such systems shall be provided in conformance with the supply requirements of the respective standards; however, every fire protection system shall be designed with a 10 psi safety factor.

(34) The amendment of Section 903.3.7, entitled Fire department connections., to read as follows:

903.3.7 Fire department connections. The location of fire department connections shall be approved by the code official.

(35) The amendment of Section 903.4, entitled Sprinkler system monitoring and alarms., to amend and add a second paragraph after the exception to read as follows:

903.4 Sprinkler system monitoring and alarms. All valves controlling the water supply for automatic sprinkler systems and water-flow switches on all sprinkler systems shall be electrically supervised and monitored by a UL listed Central Station. The fire-pump system shall also be supervised and monitored for "power available," "phase reversal" and "pump running" conditions on distinct circuits.

EXCEPTIONS:
1. Automatic sprinkler systems protecting one- and two-family dwellings.
2. Limited area systems serving fewer than 20 sprinklers.
3. Jockey pump control valves that are sealed or locked in the open position.

Sprinkler and standpipe system water-flow detectors shall be provided for each floor tap to the sprinkler system and shall cause an alarm upon detection of water flow.

(36) The amendment of Section 903.4.2, entitled Alarms., to read as follows:

903.4.2 Alarms. Approved audible devices shall be connected to every automatic sprinkler system. Such sprinkler water-flow devices shall be activated by water flow equivalent to the flow of a single sprinkler of the smallest orifice size installed in the system. Alarm devices shall be provided on the exterior of the building in an approved location. An approved audible/visible sprinkler flow alarm to alert the occupants shall be provided in the interior of the building in a normally occupied location. Where a fire alarm system is installed, actuation of the automatic sprinkler system shall actuate the building fire alarm system.

(37) The amendment of Section 903.4.3, entitled Floor control valves., to read as follows:

903.4.3 Floor control valves. Sprinkler and standpipe system water-flow detectors shall be provided for each floor tap to the sprinkler system and shall cause an alarm upon detection of water flow.

(38) The amendment of Section 905.4, entitled Location of Class I standpipe hose connections., by revising item #5 to read as follows:

5. Where the roof has a slope less than four units vertical in 12 units horizontal (33.3-percent slope), each standpipe shall be provided with a two-way hose connection located either on the roof or at the highest landing of stairways with stair access to the roof. An additional hose connection shall be provided at the top of the most hydraulically remote standpipe for testing purposes.

(39) The amendment of Section 905.9, entitled Valve supervision., to add a second paragraph after the exceptions to read as follows:

Sprinkler and standpipe system water-flow detectors shall be provided for each floor tap to the sprinkler system and shall cause an alarm upon detection of water flow. All control valves in the sprinkler and standpipe systems except for fire department hose connection valves shall be electrically supervised to initiate a supervisory signal at the central station upon tampering.

(40) The addition of Sections 907.1.2.1, 907.1.2.2 and 907.1.2.3 to read as follows:

907.1.2.1 Fire alarm control panel. The fire alarm control panel shall be installed in an approved location adjacent to the main entrance to the building unless otherwise approved by the Fire Code Official

907.1.2.2 Key/Codes. Fire alarm control panel functions such as silence and reset shall be operable without the use of a key or code. The panel cover may be locked, but the function keys cannot require a key or code.

907.1.2.3 Alarm verification. Alarm verification shall be provided for smoke detectors. Alarm verification shall be provided at the fire alarm

control panel when more than thirty (30) detectors are installed.

EXCEPTION: Alarm verification is not required for single station type smoke detectors.

(41) The addition of Section 907.1.3, entitled Design Standards., to read as follows:

907.1.3 Design Standards. Fire alarm systems, automatic fire detectors, emergency voice alarm communication systems and notification devices shall be designed, installed and maintained in accordance with NFPA 72 and local amendments. All alarm systems new or replacement serving 50 or more alarm actuating devices shall be addressable fire detection systems. Alarm systems serving more than 75 smoke detectors or more than 200 total alarm activating devices shall be analog intelligent addressable fire detection systems.

EXCEPTION: Existing systems need not comply unless the total building remodel or expansion initiated after January 1, 1998 exceeds 30% of the building. When cumulative building remodel or expansion exceeds 50% of the building must comply within 18 months of permit application.

(42) The amendment of Section 907.2.3, entitled Group E., to read as follows:

907.2.3 Group E. A manual fire alarm system shall be installed in Group E educational occupancies. When automatic sprinkler systems or smoke detectors are installed, such systems or detectors shall be connected to the building fire alarm system. An approved smoke detection system shall be installed in Group E day care occupancies. Unless separated by a minimum of 100' open space, all buildings, whether portable buildings or the main building, will be considered one building for alarm occupant load consideration and interconnection of alarm systems.

(43) The amendment of Section 907.2.3, entitled Group E., exception #1, and the addition of exception #1.1 added to read as follows:

EXCEPTIONS:

1. Group E educational and day care occupancies with an occupant load of less than 50 when provided with an approved automatic sprinkler system.

1.1 Residential In-Home day care with not more than 12 children may use interconnected single station detectors in all habitable rooms. (For care of more than five children 2½ or less years of age, see Section 907.2.6).

(44) The addition of Section 907.2.8.2, entitled Carbon Monoxide Detectors., to read as follows:

907.2.8.2 Carbon Monoxide Detectors. In hotels and motels, carbon monoxide detectors shall be provided in all locations where there is gas-fired equipment, such as, but not limited to, dryers, HVAC, or hot water heaters.

(45) The addition of Section 907.2.9.1, entitled Manual fire alarm boxes., to read as follows:

907.2.9.1 Manual Fire Alarm Boxes. Manual fire alarm boxes are prohibited in Group R-2 apartment houses less than four (4) stories in height.

(46) The amendment of Section 907.2.12, entitled High-rise buildings., exception #3, to read as follows:

3. Buildings with an occupancy in Group A-5 in accordance with Section 303.1 of the International Building Code, when used for open air seating; however, this exception does not apply to accessory uses, including but not limited to sky boxes, restaurants and similarly enclosed areas.

(47) The amendment of Section 907.2.12.2, entitled Emergency voice/alarm communication system., to read as follows:

907.2.12.2 Emergency voice/alarm communication system. The operation of any automatic fire detector, sprinkler water-flow device or manual fire alarm box shall automatically sound an alert tone followed by voice instructions giving approved information and directions on a general or selective basis to the following terminal areas on a minimum of the alarming floor, the floor above, and the floor below in accordance with the International Fire Code.

(48) The amendment of Section 907.3, entitled Manual fire alarm boxes., to add a second paragraph to read as follows:

Manual alarm actuating devices shall be an approved double action type.

(49) The addition of Section 907.5.1 entitled Alarms., to read as follows:

907.5.1 Alarms. All fire alarm systems shall be installed in such a manner that the failure of any single alarm-actuating or alarm-indicating device will not interfere with the normal operation of any other such devices. All systems shall be Class "A" wired with a minimum of six feet separation between supply and return loops. IDC - Class "A" style - D - SLC Class "A" Style 6 - notification Class "B" Style Y.

(50) The amendment of Section 907.8.2, entitled High-rise buildings., by adding an exception to read as follows:

EXCEPTION: Addressable systems.

(51) The amendment of Section 1003.2.2.4, entitled Increased Occupant Load., to read as follows:

1003.2.2.4 Increased occupant load. When approved by the building official, the occupant load in any building or portion thereof may be increased from that number established for the occupancies in Table 1003.22.2 provided that all other requirements of the code are also met based on such modified number and the occupant load shall not exceed one occupant per 5 square feet (0.47 m^2) of occupiable floor space. Adequate changes in available parking space shall also match any increases in occupant load. Where required by the building official, an approved aisle, seating or fixed equipment diagram substantiating any increase in occupant load shall be submitted. Where required by the building official, such diagram shall be posted.

(52) The amendment of Section 1003.2.12.2, entitled Opening limitations., exception #3 to read as follows:

3. In occupancies in Group I-3, F, H or in non-public portions of S, balusters, horizontal intermediate rails or other construction shall not permit a sphere with a diameter of 21 inches (533 mm) to pass through any opening.

(53) The amendment of Section 1003.3.1.3.4, entitled Access-controlled egress doors., to read as follows:

1003.3.1.3.4 Access-controlled egress doors. The entrance doors in a means of egress in buildings with an occupancy in Group A, B, E, M, R-1 or R-2 and entrance doors to tenant spaces in occupancies in Groups A, B, E, M, R-1, and R-2 are permitted to be equipped with an approved entrance and egress access control system which shall be installed in accordance with the following criteria:

1. Egress doors shall be readily openable from the egress side without the use of a key, card or special knowledge of effort.
2. Push buttons are not allowed for egress purposes.
3. All devices utilized for exiting shall be listed for the purpose.
4. Activation of the building fire alarm system and/or sprinkler system, if provided, shall automatically unlock the doors, and the doors shall remain unlocked until the fire alarm system has been reset.
5. A Knox box may be required by the Fire Code Official for Fire Department access.

(54) The amendment of Section 1003.3.1.8.2, entitled Delayed egress locks., to revise and add a sentence after Items 1-6 to read as follows:

1003.3.1.8.2 Delayed egress locks. Approved, listed, delayed egress locks shall be permitted to be installed on doors serving any occupancy except Group A, E and H occupancies in buildings which are equipped throughout with an automatic sprinkler system in accordance with Section 903.3.1.1 and an approved automatic smoke or heat detection system installed in accordance with Section 907, provided that the doors unlock in accordance with Items 1 through 6 below. A building occupant shall not be required to pass through more than one door equipped with a delayed egress lock before entering an exit.

(Items 1-6 remain unchanged.)

A permit from the Fire Department is required prior to the installation of any delayed egress locks or other special locking systems.

(55) The amendment of Section 1004.3.2.1, entitled Construction., to add exception #5 to read as follows:

5. In Group B office buildings, corridor walls and ceilings need not be of fire-resistive construction within office spaces of a single tenant when the space is equipped with an approved automatic smoke-detection system within the corridor. The actuation of any detector shall activate alarms audible in all areas served by the corridor. The smoke-detection system shall be connected to the building's fire alarm system where such a system is provided.

(56) The amendment of Section 1005.2.1, entitled Minimum number of exits., to read as follows:

1005.2.1 Minimum number of exits. Every floor area shall be provided with the minimum number of approved independent exits as required by Table 1005.2.1 based on the occupant load except as modified in Section 1005.2.2. For the purpose of this chapter, occupied roofs shall be provided with exits as required for floors. The required number of exits from any story, basement or individual space shall be maintained until arrival at grade or the public way.

(57) The amendment of Section 1101.2, entitled Design., to add an exception to read as follows:

EXCEPTION. Buildings regulated under State Law and built in accordance with State certified plans, including any variances or waivers granted by the State, shall be deemed to be in compliance with the requirements of this Chapter.

(58) The amendment of Section 1108.2.1, entitled Unisex toilet and bathing rooms., to read as follows:

1108.2.1 Unisex toilet and bathing rooms. In assembly and mercantile occupancies, an accessible unisex toilet room shall be provided where an aggregate of six or more male or female water closets are provided. In buildings of mixed occupancy, only those water closets required for the assembly or mercantile occupancy shall be used to determine the unisex toilet room requirement. In recreational facilities where separate-sex bathing rooms are provided, an accessible unisex bathing room shall be provided. Fixtures located within unisex toilet and bathing rooms shall be included in determining the number of fixtures provided in an occupancy.

(59) The amendment of Section 1209.2, entitled Walls., exception #2, to read as follows:

2. Toilet rooms that are not accessible to the public and which have not more than one water closet; provided that walls around urinals comply with the minimum surrounding material specified by the Plumbing Code.

(60) The amendment of Section 1202.1, entitled General, to add the exception to read as follows:

EXCEPTION: Private laundry rooms in Group R, Division 2 and inside individual dwelling units of Group R, Division 3 and 4 Occupancies.

(61) The amendment of Section 1403.3, entitled Vapor retarder., to delete the exceptions and revise to read as follows:

1403.3 Vapor retarder. In all framed walls, floors and roof/ceilings comprising elements of the building thermal envelope, a vapor retarder, when installed, shall be installed in a manner so as to not trap moisture. Vapor retarders shall be tested in accordance with ASTM E 96.

(62) The amendment of Table 1405.2, entitled Minimum Thickness of Weather Coverings., by adding footnote "d" wood shingles to read as follows:

d: Wood shingles and shakes shall not be used as an exterior wall covering within seven feet (7') of grade for Group R-1 and R-2 Occupancies.

All wood shingles or shakes to be used as an exterior wall covering for Group R-1 and R-2 Occupancies shall be fire-retardant shakes and shingles. Fire-retardant shakes and shingles are wood shakes and shingles complying with ASTM D 2898 impregnated by the full-cell vacuum-pressure process with fire retardant chemicals, and have been qualified by ASTM E 108 or U.L. 790 for use on Class A, B or C roofs. Each bundle of treated wood shakes and shingles shall bear labels identifying their roof covering classification and approved quality control agency.

(63) The amendment of Table 1505.1, entitled Minimum Roof Covering Classification for Types of Construction., by replacing footnote b and c with the following:

b. All individual replacement shingles or shakes shall be in compliance with the rating required by this table.

c. Non-classified roof coverings shall be permitted on buildings of U occupancies having not more than 120 sq. ft. of projected roof area. When exceeding 120 sq. ft. of projected roof area, buildings of U occupancies may use non-rated non-combustible roof coverings.

(64) The amendment of Section 1505.7, entitled Special purpose roofs., by deleting it in its entirety.

(65) The amendment of Section 1510.3, entitled Recovering vs. replacement., by the addition of subparagraph #4, to read as follows:

4. **Asphalt shingles.** Not more than one overlay of asphalt shingles shall be applied over an existing asphalt or wood shingle roof.

(66) The amendment of Section 1610.2, entitled Retaining Walls, by the addition of the following paragraph and "EXCEPTION":

Retaining walls exceeding three feet (3') in height shall be constructed of materials other than wood, including treated wood products, and shall be designed by a professional engineer. A wall built in tiers shall be considered a single wall in height when the base of the upper tier is set back from the base of the lower tier less than one and one-half (1½) times the height of the wall section below.

EXCEPTION: Retaining walls erected on properties used for Group R-3 occupancies may be constructed up to six feet (6') in height of any approved materials. A professional engineer shall design these retaining walls when exceeding a height of four feet (4'). Unless specifically approved by the Building Official, such walls shall not support a building, driveway or other permanent construction closer to the wall than one and one-half (1½) times the full height of the wall.

(67) The amendment of Section 1704.1, entitled General, to revise the first sentence to read as follows:

All construction or work for which a permit is required shall be subject to inspection by the Building Official. The Building Official may require certain types of construction to have continuous inspection by special inspectors as specified in Chapter 17 of this code.

(68) The addition of Section 2308.2.3, entitled Application to engineered design., to read as follows:

2308.2.3 Application to engineered design. When accepted by the code official, any portion of this section is permitted to apply to buildings that are otherwise outside the limitations of this section provided that:

1. The resulting design will comply with the requirements specified in Chapter 16;
2. The load limitations of various elements of this section are not exceeded; and
3. The portions of this section which apply are identified by an engineer in the construction documents.

(69) The amendment of Section 2406.2.1, entitled Exceptions, number 2, to read as follows:

2. Decorative glass, in Section 2406.2 items 1, 6 or 7 when used for decorative purposes or item 5 when not equipped with a showerhead.

(70) The amendment of Chapter 29, entitled Plumbing Systems, to read as follows:

SECTION 2901
GENERAL

2901.1 Scope. The Provisions of this chapter and the *International Plumbing Code* shall govern the erection, installation, alteration, repairs, relocation, replacement, addition to, use or maintenance of plumbing equipment and systems. Plumbing systems and equipment shall be constructed, installed and maintained in accordance with the *International Plumbing Code.*

SECTION 2902
MINIMUM PLUMBING FACILITIES

2902.1 Minimum number of fixtures. Plumbing fixtures, including provisions for accessibility in accordance with Chapter 11, shall be provided for the type of occupancy and in the minimum number shown in Table 2902.1. Types of occupancies not shown in Table 2902.1 shall be considered individually by the Building Official. The number of occupants shall be determined by the occupant load factors shown in Table 2902.1 unless sufficient data is approved by the building official for different occupant load factors. Occupancy classification shall be determined in accordance with Chapter 3. The number of fixtures are the minimum required as shown in Table 2902.1 and are assumed to be based on 50 percent male and 50 percent female, unless statistical data approved by the building official indicates a different distribution of the sexes.

Exception: Plumbing fixtures, including provisions for accessibility in accordance with Chapter 11, for facilities where the public congregates shall be provided in accordance with Section 2902.5.

2902.2 Separate Facilities. Where plumbing fixtures are required, separate facilities shall be provided for each sex.

Exceptions:

1. Separate facilities shall not be required for private facilities.

2. Separate facilities for employees shall not be required in occupancies in which 15 or less people are employed.
3. Separate facilities shall not be required in structures or tenant spaces with a total occupant load, including both employees and customers, of 15 or less.

2902.3 Access to and location of employee facilities. Access to employees' toilet facilities, in other than mercantile and assembly occupancies, shall be from within the employees regular working areas. Access to employees' toilet facilities in mercantile and assembly occupancies may be in combination with public facilities as required in this section.

Facilities that are required for employees in storage structures or kiosks, and are located in adjacent structures under the same ownership, lease or control, shall be a maximum of 500 feet (152 m) from the employees regular working area.

The required employee toilet facilities shall be located not more than one story above or below the employee's regular working area and the path of travel to such facilities shall not exceed a distance of 500 feet (152 m).

2902.4 Public facilities. Customers, patrons and visitors shall be provided with public toilet facilities in structures and tenant spaces intended for public utilization when the total occupant load is 16 or more; or, for all A-2 occupancies. Public utilization is assumed when customers, patrons and visitors utilize a structure for the purpose of dining, shopping, conducting business on more than a simple casual basis. A simple casual basis is assumed when the average customer, patron and visitor is in and out of a structure or tenant space in a very short duration of time; such as but not limited to, picking up/dropping off dry cleaning or laundry, food take-out only, cash checking and/or bill paying facilities, and similar facilities. Public facilities shall be located not more than one story above or below the space required to be

provided with public toilet facilities and the path of travel to such facilities shall not exceed a distance of 500 feet (152 m).

Required facilities shall be free of charge and designated by legible signs for each sex. Where pay facilities are installed, such facilities shall be in excess of the required minimum facilities.

2902.5 Facilities where the public congregates. Plumbing fixtures, including provisions for accessibility in accordance with Chapter 11, for facilities where the public congregates shall be provided in accordance with this section. For the purpose of this section, the term “facilities where the public congregates” shall include sports and entertainment arenas, stadiums, community and convention halls, specialty event centers and amusement facilities. The term “facilities where the public congregates” does not include hotels, churches, restaurants, bowling centers, public or private elementary or secondary schools, or historic buildings.

2902.5.1 When the use of restrooms is designated by gender, toilet facilities shall be provided for each sex at a ratio of not less than 2:1 women’s to men’s or according to Table 2902.2.

2902.5.2 This section shall apply to new structures and to existing structures when the costs of structural alterations, repairs or improvements exceed 50% of the worth of the facility, as determined by the Tarrant Appraisal District.

2902.6 Additional fixtures for food preparation facilities. In addition to the fixtures required by this chapter, all food service facilities shall also be provided with additional fixtures as outlined in this section.

2902.6.1 Hand washing lavatory. At least one hand washing lavatory shall be provided for use by employees that is accessible from food preparation, food dispensing and warewashing

areas. The City of Arlington Neighborhood Services Department may require additional hand washing lavatories based on convenience of use by employees.

2902.6.2 Service sink. In new or remodeled food service establishments, at least one service sink or one floor sink shall be provided so that it is conveniently located for the cleaning of mops or similar wet floor cleaning tools and for the disposal of mop water and similar liquid waste. The City of Arlington Neighborhood Services Department shall be the final authority for the approval of the location.

Table 2902.1 – MINIMUM PLUMBING FIXTURES [1,2,3]

TYPE OF BUILDING OR OCCUPANCY[4]	WATER CLOSETS[5] (fixtures per person) MALE	FEMALE	LAVATORIES[6] (fixtures per person) MALE	FEMALE	BATHTUB OR SHOWER (fixtures per person)
For the occupancies listed below, use 30 square feet (2.78 $m^{2)}$ per occupant for the minimum number of plumbing fixtures.					
Group A Conference rooms, dining rooms, drinking establishments, exhibit rooms, gymnasiums, lounges, stages restaurants and gamerooms	1:1-25 2:26-75 3:76-125 4:126-200 5:201-300 6:301-400 Over 400, add one fixture for each additional 200 males or 150 females.	1:1-25 2:26-75 3:76-125 4:126-200 5:201-300 6:301-400	One for each water closet up to four; then one for each two additional water closets.		No requirements
For the assembly occupancies listed below, use the number of fixed seating or, where no fixed seating is provided, use 15 square feet (1.39 m^2) per occupant for the minimum number of plumbing fixtures.					
Assembly places – Auditoriums, dance floors, lodge rooms, and casinos	1:1-50 2:51-100 3:101-150 4:151-300 Over 300 males, add one fixture for each additional 200, and over 400 females add one for each 125.	1:1-50 2:51-100 3:101-150 4:151-300	1:1-200 2:201-400 3:401-750 Over 750, add one fixture for each additional 500 persons.	1:1-200 2:201-400 3:401-750	No requirements
For the assembly occupancies listed below, use the number fixed seating or, where no fixed seating is provided, use 30 square feet (2.29 m^2) per occupant for the minimum number of plumbing fixtures.					
Worship places, Principal assembly area Worship places, Educational and activity unit	1:150 1:125	1:75 1:75	1:2 water closets 1:2 water closets		No requirements
For the occupancies listed below, use 200 square feet (2.29 m^2) per occupant for the minimum number of plumbing fixtures.					
Group B Offices or public buildings	1:1-15 2:16-35 3:36-55 Over 55, add one for each 50 persons.	1:1-15 2:16-35 3:36-55	1:2 water closets		No requirements

(Continued)

TYPE OF BUILDING OR OCCUPANCY[4]	WATER CLOSETS[5] (fixtures per person) MALE	FEMALE	LAVATORIES[6] (fixtures per person) MALE	FEMALE	BATHTUB OR SHOWER (fixtures per person)
For the occupancies listed below, use 50 square feet (4.65 m^2) per occupant for the minimum number of plumbing fixtures.					
Group E Schools – for staff use All schools	1:1-15 2:16-35 3:36-55 Over 55, add one fixture for each additional 40 persons.	1:1-15 2:16-35 3:36-55	1:40	1:40	
Schools – for student use Day care	1:1-20 2:21-50 Over 50, add one fixture for each additional 50 persons.	1:1-20 2:21-50	1:1-25 2:26-50 Over 50, add one fixture for each additional 50 persons	1:1-25 2:26-50	No requirements
Elementary Secondary	1:30 1:40	1:30 1:40	1:35 1:40	1:35 1:40	
For the occupancies listed below, use 50 square feet (4.65 m^2) per occupant for the minimum number of plumbing fixtures.					
Educational Facilities other than Group E (colleges, universities, adult centers, etc.)	1:40	1:30	1:40	1:40	No requirements
For the occupancies listed below, use 2,000 square feet (185 m^2) per occupant for the minimum number of plumbing fixtures					
GroupF Workshops, foundries and similar establishments, and Group H Occupancies	1:1-10 2:11-25 3:26-50 4:51-75 5:76-100 Over 100, add one fixture for each additional 300 persons	1:1-10 2:11-25 3:26-50 4:51-75 5:76-100	1:2 water closets		1 shower for each 15 persons w/ possibility of being exposed to excessive heat or to skin contamination with irritating materials
For the occupancies listed below, use the designated application and 200 square feet (18.58 m^2) per occupant of the general use area for the minimum number of plumbing fixtures.					
Group I Hospital waiting rooms Hospital general use areas	1:room (usable by either sex) 1:1-15 2:16-35 3:36-55 Over 55, add one fixture for each additional 40 persons	1:1-15 2:16-35 3:36-55	1 per room 1:2 water closets		No requirements

(Continued)

TYPE OF BUILDING OR OCCUPANCY[4]	WATER CLOSETS[5] (fixtures per person) MALE	FEMALE	LAVATORIES[6] (fixtures per person) MALE	FEMALE	BATHTUB OR SHOWER (fixtures per person)
Hospitals Patient room Ward Room	1: Per room 1: eight patients		1: Per room 1: 10 patients		1: Per room 1: 20 patients
Jails and reformatories Cell Exercise room	1 per cell 1 per exercise room		1 per cell 1 per exercise room		No requirements
Other institutions (on each occupied floor)	1:25	1:25	1:10	1:10	1:8
For the occupancies listed below, use 200 square feet (18.58 m^2) per occupant for the minimum number of plumbing fixtures.					
Group M Retail or wholesale stores	1:1-50 2:51-100 3:101-400 Over 400, add one fixture for each additional 500 males and one for each 150 females.	1:1-50 2:51-100 3:101-200 4:201-300 5:301-400	1: 2 water closets		No requirements
For Group R Occupancies, dwelling units and hotel guest rooms, use the chart. For congregate residences, use 200 square feet (18.58 m^2) for Group R, Division 1 Occupancies and 300 square feet (27087 m^2)					
Group R Dwelling units Hotel guest rooms	1: dwelling unit 1: guest room		1: dwelling unit 1: guest room		1: dwelling unit 1: guest room
Congregate residences	1:10 Add one fixture for each additional 25 males and one fore each additional 20 females.	1:8	1:12 Over 12, add one fixture for each additional 20 males and one for each additional 15 females	1:12	1:8 For females, add one bathtub per 30. Over 150, add one per 20.
For the occupancies listed below, use 5,000 square feet (464.5 m^2) per occupant for the minimum number of plumbing fixtures.					
Group S Warehouses	1:1-10 2:11-25 3:26-50 4:51-75 5:76-100 Over 100, add one for each 300 males and females	1:1-10 2:11-25 3:26-50 4:51-75 5:76-100	1: 40 occupants of each sex		1 shower for each 15 persons w/ possibility of being exposed to excessive heat or to skin contamination with poisonous, infectious or irritating materials

[1] The figures shown are based on one fixture being the minimum required for the number of persons indicated or any fraction thereof.
[2] Drinking fountains shall not be installed in toilet rooms.
[3] When the design occupant load is less than 16 persons, a facility usable by either sex may be approved by the Building Official.
[4] Any category not mentioned specifically or about which there are any questions shall be classified by the Building Official and included in the category which it most nearly resembles, based on the expected use of the plumbing facilities.
[5] Where urinals are provided, one water closet less than the number specified may be provided for each urinal installed, except the number of water closets in such cases shall be reduced to less than one half of the minimum specified.

[6] Twenty-four inches (610 mm) of wash sink or 18 inches (457 mm) of a circular basis, when provided with water outlets for each space, shall be considered equivalent to one lavatory.
[7] Except for dining establishments, all other occupancies with an occupant load over 30 shall have one drinking fountain for each 150 total occupants.

TABLE 2902.2 MINIMUM PLUMBING FACILITIES FOR FACILITIES WHERE THE PUBLIC CONGREGATES [1, 2,]

TYPE OF BUILDING OR OCCUPANCY	WATER CLOSETS (fixtures per person)		LAVATORIES (fixtures per person)		URINALS (fixtures per person)
	MALE	FEMALE	MALE	FEMALE	
For the assembly occupancies listed below, use the number of fixed seating or, where no fixed seating is provided, use 15 square feet (1.39 m^2) per occupant for the minimum number of plumbing fixtures.					
Facilities Where the Public Congregates					
Sports and entertainment arenas	1:1-100	3:1-50	1:1-200	1:1-200	1:1-100
Stadiums	2:101-200	4:51-100	2:201-400	2:201-400	2:101-200
Community and convention halls	3:201-400	8:101-200	3:401-750	3:401-750	3:201-400
Specialty event centers		11:201-400			4:401-600
Amusement facilities	Over 400, add 1 fixture for each additional 500 males; over 400 add 2 fixtures for each 300 females		Over 750, add one fixture for each additional 500 persons.		Over 600, add 1 fixture for each additional 500 males

[1] The figures shown are based on one fixture being the minimum required for the number of persons indicated or any fraction thereof.
[2] Drinking fountains shall not be installed in toilet rooms.
[3] Any category not mentioned specifically or about which there are any questions shall be classified by the Building Official and included in the category which it most nearly resembles, based on the expected use of the plumbing facilities.
[4] Twenty-four inches (610 mm) of wash sink or 18 inches (457 mm) of a circular basis, when provided with water outlets for each space, shall be considered equivalent to one lavatory.
[5] Except for dining establishments, all other occupancies with an occupant load over 30 shall have one drinking fountain for each 150 total occupants.

(71) The amendment of Section 3109.1, entitled General, to read as follows:

The provisions of this section shall apply to the design and construction of barriers for all swimming pools.

EXCEPTION: The following uses are regulated by State statute and are not subject to this section:

1. Group R-2 apartments.

2. A pool owned, controlled, or maintained by the owner of a multi-unit rental complex or by property owners association.

(72) The amendment of Section 3109.2 entitled Definitions, to read as follows:

3109.2 Definition. The following words and terms shall, for the purposes of this section and as used elsewhere in this code, have the meaning shown herein.

MULTI-UNIT RENTAL COMPLEX is two or more dwelling units in one or more buildings that are under common ownership, managed by the same owner, managing agent, or management company, and located on the same lot or tract of land or adjacent lots or tracts of land. The term includes a condominium project. The term does not include:

(A) A facility primarily renting rooms to overnight guests; or

(B) A single-family home or adjacent single-family homes that are not part of a condominium project.

POOL DECK is a flat walking surface consisting of wood, stone, brick, concrete or other similar material located within five feet (5') of the waters edge of a swimming pool or spa.

PROPERTY OWNERS ASSOCIATION is an association of property owners for a residential subdivision, condominium, cooperative, townhouse project, or other project involving residential dwellings.

SELF-CLOSING GATE is a gate, which closes or shuts automatically, without the aid of human, electrical, solar or battery power after being opened.

SELF-CLOSING AND SELF-LATCHING DEVICE is a device that causes a gate to automatically close and latch without human, electrical, solar or battery power.

SWIMMING POOLS. Any structure intended for swimming, recreational bathing or wading that contains water over 24 inches (610 mm) deep. This includes in-ground, aboveground and on-ground pools; hot tubs; spas and fixed-in-place wading pools.

(73) The amendment of Section 3109.4.1.3, entitled Closely Spaced Horizontal Members, by the addition of an exception to number 1 to read as follows:

EXCEPTION: When horizontal members are part of a fence that is at least 6 feet (1830 mm) in height, the horizontal members need not be on the pool side of the barrier.

(74) The amendment of Section 3109.4.1.7, entitled Gates, by the addition of an exception to number 4 to read as follows:

EXCEPTION: Driveway access gates across a paved or improved surface intended for regular vehicle access shall not be located in a swimming pool barrier.

(75) The amendment of Section 3304.1, entitled Excavation and Fill, by the addition of the following five (5) paragraphs and one (1) "EXCEPTION" after the first paragraph:

Should trench excavations exceed five feet (5') in depth, bid documents and construction contracts must include provisions for specifications for adequate safety systems that meet Occupational Safety and Health Administration (OSHA) standards. Further, these plans and specifications shall include a pay item for these safety systems, which is to be a part of the contract. In addition, a safety program outline shall be provided to the property owner by the contractor and the contractor's safety record shall be reviewed as a condition of the contract award.

Prior to performing such excavations, the contractor must submit plans and specifications for trench shoring to the Building Official for review. The plans shall be stamped, signed and dated by a registered professional engineer attesting that these plans meet OSHA requirements in accordance with state law.

The contract requirements of this Section shall not apply to contracts entered into with persons subject to the safety standards adopted under V.A.C.S., Article 6053-1, entitled Transportation of Gas and Gas Pipeline Facilities.

Acceptable fill shall only be comprised of one or more of the following materials: Dirt, concrete or asphalt. No person shall cause, allow, suffer or permit fill containing any other material to be used for any building, structure, foundation or retaining structure.

No person shall cause, allow, suffer or permit fill to be placed or stored, upon any undeveloped lot not currently experiencing ongoing construction, in such a manner that said fill is not spread uniformly so that no area of fill differs in height by more than twenty-four inches (24") from any other area of fill on said lot. Provided, however, that upon written notice by the Building Official or a designated representative, the record property owner of any such lot shall be allowed forty-five (45) days to remove or spread said fill in order to comply with this provision. Notice shall be deemed sufficient for this purpose if mailed, by certified mail, return receipt requested, to the last-known address of the record property owner, or if personally delivered to said owner.

EXCEPTION: This provision shall not apply to fill located upon the premises of a business, which provides said fill to others for compensation. A valid certificate of occupancy for such business shall be sufficient to establish the applicability of this exception.

Further, Article I, **Section 1.04**, Subsection (D), is hereby amended so that hereafter said subsection shall be and read as follows:

D. The amendment of the following I.R.C. provisions:

(1) The amendment of Section R102.4, entitled Referenced codes and standards., to read as follows:

R102.4 Referenced codes and standards. The codes, when specifically adopted, and standards referenced in this code shall be considered part of the requirements of this code to the prescribed extent of each such reference. Whenever amendments have been adopted to the referenced codes and standards, each reference to said code and standards shall be considered to reference the amendments as well. Any reference made to NFPA 70 or the ICC Electrical Code shall mean the Electrical Code as adopted.

Where differences occur between provisions of this code and referenced codes and standards, the provisions of this code shall apply.

EXCEPTION: Where enforcement of a code provision would violate the conditions of the listing of the equipment or appliance, the conditions of the listing and manufacture's instructions shall apply.

(2) The amendment of I.R.C. Section R202, entitled Definitions., to revise the definition of "Townhouse" to read as follows:

TOWNHOUSE. A single-family dwelling unit constructed in a group of attached units separated by property lines in which each unit extends from foundation to roof and with open space on at least two sides.

(3) The amendment of table R301.2(1), entitled Climatic and Geographic Design Criteria, fill in as follows:

Ground Snow Load	Wind	Seismic Design Category[f,g]
	Speed[e] (mph)	
5 lb/ft^2	90 (3-sec-gust)/75 fastest mile	A

Subject to damage from				Winter Design Temp[f]	Flood Hazards[h]
Weathering[a]	Frost line depth[b]	Termite[c]	Decay[d]		
Moderate	6"	Very heavy	Slight to moderate	22°F	Local code

(4) The amendment of I.R.C. Section 302, entitled Location on lot., by the addition of Section R302.4 entitled Fire sprinkler system., to read as follows:

R302.4 Fire sprinkler system. All R3 and U occupancies are required to have an approved fire sprinkler system.

EXCEPTION: Buildings with an approved fire department access.

(5) The amendment of I.R.C. Section R302.1, entitled Exterior walls., Exception, to read as follows:

EXCEPTIONS:

1. Tool and storage sheds, playhouses and similar structures exempted from permits by Section R105.2 are not required to provide wall protection based on location on the lot. Projections beyond the exterior wall shall not extend over the lot line.
2. Open metal carport structures may be constructed within zero (0) feet of the property line without fire-resistive or opening projection when the location of such is approved as required by other City ordinances.

(6) The amendment of I.R.C. Section R303.3, entitled Bathrooms., Exception, to read as follows:

EXCEPTIONS: The glazed areas shall not be required where artificial light and a mechanical ventilation system, complying with one of the following, are provided:

1. The minimum ventilation rates shall be 50 cfm (23.6 L/s) for intermittent ventilation or 20 cfm (9.4 L/s) for continuous ventilation. Ventilation air from the space shall be exhausted directly to the outside.

2. Bathrooms that contain only a water closet, lavatory or combination thereof may be ventilated with an approved mechanical recirculating fan or similar device designed to remove odors from the air.

(7) The amendment of I.R.C. Section R303.6, entitled Required heating., to read as follows:

R303.6 Required heating. Every dwelling unit shall be provided with heating facilities capable of maintaining a minimum room temperature of 68°F (20°C) at a point 3 feet (914 mm) above the floor and 2 feet (610 mm) from exterior walls in all habitable rooms at the design temperature.

(8) The amendment of I.R.C. Section R314.8, entitled Under stair protection., to read as follows:

R314.8 Under stair protection. Enclosed accessible space under stairs shall have walls, under stair surface and any soffits protected on the enclosed side with 5/8-inch (15.8 mm) fire-rated gypsum board or one-hour fire-resistive construction.

(9) The amendment of I.R.C. Section R321.1, entitled Two-family dwellings., to add a second exception to read as follows:

2. Two-family dwelling units that are also divided by a property line through the structure shall be separated as required for townhouses.

(10) The amendment of I.R.C. Section R322.1, entitled Moisture control., to delete the exceptions and revise to read as follows:

R322.1 Moisture control. In all framed walls, floors and roof/ceilings comprising elements of the building thermal envelope, a vapor retarder, when installed, shall be installed in a manner so as to not trap moisture.

(11) The amendment of I.R.C. Section R327.1, entitled General., to read as follows:

R327.1 General. All buildings and structures, when permitted to be erected in areas prone to flooding as identified in Table R301.2(1) and classified as either flood hazard areas (including A Zones) or

coastal high hazard areas (including V-Zones), shall be constructed and elevated as required by the provisions contained in this section or by other local provisions as applicable.

(12) The amendment of I.R.C. Section R403.1.6, entitled Foundation anchorage., to revise the second sentence of the second paragraph to read as follows:

There shall be a minimum of two bolts per piece with one bolt located not more than 12 inches (305 mm) or less than seven bolt diameters from each end of the piece.

(13) The amendment of I.R.C. Section R703.7.4.1, entitled Size and spacing., to add a second paragraph to read as follows:

For 3¼ square feet (0.302 m^2) of wall area, the following dimensions shall be adhered to:

1. When ties are placed on studs 16" o.c., they shall be spaced no further apart than 29" vertically starting approximately 15" from the foundation.
2. When ties are placed on studs 24" o.c., they shall be spaced no further apart than 19" vertically starting approximately 10" from the foundation.

(14) The amendment of I.R.C. Section R703.7.4.2, entitled Air space., to add a second paragraph to read as follows:

When using ties that will flex when pushed, spot bedding of cement mortar shall be installed on all ties.

(15) The addition of I.R.C. Section R902.3, entitled Minimum roof class., to read as follows:

R902.3 Minimum roof class. All roof coverings shall be a minimum Class C. All individual replacement shingles or shakes shall be a minimum Class C.

EXCEPTION: Non-classified roof coverings shall be permitted on buildings of U occupancies having not more than 120 sq. ft. of projected roof area. When exceeding 120 sq. ft. of projected roof area,

buildings of U occupancies may use non-rated non-combustible coverings.

(16) The amendment of I.R.C. Section R907.1, entitled General., to add a sentence to read as follows:

All individual replacement shingles or shakes shall comply with Section R902.3.

(17) The amendment of I.R.C. Section R1005.2, entitled Exterior air intake., to read as follows:

R1005.2 Exterior air intake. The exterior air intake shall be capable of providing all combustion air from the exterior of the dwelling or from spaces within the dwelling ventilated with outside air such as attic spaces. The exterior air intake shall not be located within the garage or basement of the dwelling nor shall the air intake be located at an elevation higher than the firebox. The exterior air intake shall be covered with a corrosion-resistant screen of ¼-inch (6.4 mm) mesh.

(18) The amendment of I.R.C. Section N1101.2.1, entitled Residential buildings, type A-1., to read as follows:

N1101.2.1 Residential Buildings, Type A-1. Compliance shall be demonstrated by one of the following:

1. Meeting the requirements of this chapter for buildings with a glazing area that does not exceed 15 percent of the gross area of exterior walls;
2. Meeting the requirements of this chapter for buildings with a glazing area that is greater than 15 percent but not exceeding 20 percent of the gross area of exterior walls and air conditioning equipment rated 12 SEER or higher;
3. Meeting the requirements of this chapter for buildings with a glazing area that is greater than 20 percent but not exceeding 25 percent of the gross area of exterior walls and air conditioning equipment rated 14 SEER or higher; or
4. Meeting the requirements of the *International Energy Conservation Code* for residential buildings, Type A-1.

(19) The addition of I.R.C. Section N1101.3.4, entitled Exterior basement or slab insulation., to read as follows:

N1101.3.4 Exterior basement or slab insulation. When susceptibility to termite damage is classified as "very heavy" according to Table R301.2(1), designs employing basement or slab exterior insulation capable of harboring termites shall not be utilized.

(20) The amendment of I.R.C. Section N1102.1, entitled Thermal performance criteria., to read as follows:

N1102.1 Thermal performance criteria. The minimum required insulation R-value or maximum required U-factor for each element in the building thermal envelope (fenestration, roof/ceiling, opaque wall, floor, slab edge, crawl space wall and basement wall) shall be in accordance with the criteria in Table N1102.1.

Residential building, Type A-1, with greater than 25 percent glazing area; residential buildings, Type A-2, with greater than 25 percent glazing area; and any building in climates with HDD equal to or greater than 13,000; shall determine compliance using the building envelope requirements of the *International Energy Conservation Code*.

(21) The amendment of I.R.C. Table N1102.1, entitled Simplified Prescriptive Building Envelope Thermal Component Criteria Minimum Required Thermal Performance (U-factor and R-value)., to read as follows:

MAXIMUM GLAZING *U*-FACTOR [Btu/(hr$_*$ft$^2_*$F)]	MINIMUM INSULATION *R*-VALUE [(hr$_*$ft$^2_*$F)/Btu]						
	Ceilings open to Attic Space	Ceiling Joist/ Roof Rafter Assembly	Walls	Floors	Basement Walls	Slab perimeter	Crawl space walls
0.65	R-38	R-22	R-13	R-19	R-0	R-0	R-0

Use of this table is limited to projects where the cathedral ceiling area is limited to one third or less of the total ceiling area.

(22) The amendment of I.R.C. Section N1102.2, entitled Maximum solar heat gain coefficient for fenestration products., to read as follows:

N1102.2 Maximum solar heat gain coefficient for fenestration products. The area-weighted-average solar heat gain coefficient (SHGC) for glazed fenestration installed in climate zones with less than 3,500 HDD shall not exceed 0.40.

(23) The addition of I.R.C. Section M1304.2, entitled Minimum burial depth., to read as follows:

M1304.2 Minimum burial depth. Underground fuel piping systems shall be installed a minimum depth of 18 inches (458 mm) below grade.

(24) The amendment of I.R.C. Section M1305.1.3, entitled Appliances in attics., to read as follows:

M1305.1.3 Appliances in attics. Attics containing appliances requiring access shall be provided with an opening and a clear and unobstructed passageway large enough to allow removal of the largest appliance, but not less than 30 inches (762 mm) high and 22 inches (559 mm) wide and not more than 20 feet (6096 mm) in length when measured along the centerline of the passageway from the opening to the appliance. The passageway shall have continuous solid flooring not less than 24 inches (610 mm) wide. A level service space at least 30 inches (762 mm) deep and 30 inches (762 mm) wide shall be present along all sides of the appliance where access is required. The clear access opening dimensions shall be a minimum of 20 inches by 30 inches (508 mm by 762 mm), or larger where such dimensions are not large enough to allow removal of the largest appliance. As a minimum, access to the attic space shall be provided by one of the following:

1. A permanent stair.
2. A pull down stair.
3. An access door from an upper floor level.

EXCEPTION: The passageway and level service space are not required where the appliance is capable of being serviced and removed through the required opening.

(25) The addition of I.R.C. Section M1305.1.5, entitled Water heaters above ground or floor., and Section M1305.1.5.1 to read as follows:

M1305.1.5 Water heaters above ground or floor. When the mezzanine or platform in which a water heater is installed is more than eight (8) feet (2438 mm) above the ground or floor level, it shall be made accessible by a stairway or permanent ladder fastened to the building.

M1305.1.5.1. Whenever the mezzanine or platform is not adequately lighted or access to a receptacle outlet is not obtainable from the main level, lighting and a receptacle outlet shall be provided in accordance with Section M1305.1.3.1.

(26) The amendment of I.R.C. Section M1305.1.3.1, entitled Electrical requirements., to add a sentence to read as follows:

Low voltage wiring of 50 Volts or less shall be installed in a manner to prevent physical damage.

(27) The amendment of I.R.C. Section M1305.1.4.1, entitled Ground clearance., to read as follows:

M1305.1.4.1 Ground clearance. Appliances supported from the ground shall be level and firmly supported on a concrete slab or other approved material extending above the adjoining grade a minimum of 3 inches (76 mm). Appliances suspended from the floor shall have a clearance of not less than 6 inches (152 mm) above the ground.

(28) The amendment of I.R.C. Section M1305.1.4.3, entitled Electrical requirements., to add a sentence to read as follows:

Low voltage wiring of 50 Volts or less shall be installed in a manner to prevent physical damage.

(29) The amendment of I.R.C. Section M1307.3.1, entitled Protection from impact., by deleting it in its entirety.

(30) The amendment of I.R.C. Section M1411.3 entitled Condensate disposal., to read as follows:

M1411.3 Condensate disposal. Condensate from all cooling coils and evaporators shall be conveyed from the drain pan outlet to a permanently wet p-trap. Condensate shall not discharge in a publicly exposed area such as into a street, alley, sidewalk or other areas so as to cause a nuisance.

Exceptions:

1. Condensate may discharge directly to a roof drain that connects to an underground storm sewer system,
2. Condensate may discharge directly onto roofs covered with membrane type roof coverings where the condensate will drain to a roof drain that connects to an underground storm sewer system,
3. Condensate may discharge to a landscaped area containing flowers and other bedding plants other than turf. There must be five square feet of landscaped area for each ton of refrigeration, or
4. Condensate may discharge to a French drain consisting of a pit excavated below grade that is not less than 24 inches (610 mm) in any dimension. The pit shall be filled with coarse gravel and the drainpipe shall extend into the pit and be securely anchored. A single drain shall not receive the condensate discharge of more than 10 tons nominal of combined cooling capacity. The pit shall be covered with sod after inspection. The French drain shall not be located so that it will receive direct discharge from a roof or downspout.

(31) The amendment of I.R.C Section 1411.4 entitled Insulation of refrigerant piping., to read as follows:

M1411.4 Insulation of refrigerant piping. Insulation of refrigerant piping shall be in accordance with Chapter 11 of this code.

(32) The amendment of I.R.C. Section M1501.2, entitled Exhaust duct size., to read as follows:

M1501.2 Exhaust duct size. The minimum diameter of the exhaust duct shall be as recommended by the

manufacturer, shall be at least the diameter of the appliance outlet and shall be a minimum nominal size of 4 inches (102 mm) diameter. The size of duct shall not be reduced along its developed length nor at the point of termination.

(33) The amendment of I.R.C. Section M1501.3, entitled Length limitation., to read as follows:

M1501.3 Length limitation. The maximum length of a clothes dryer exhaust duct shall not exceed 25 feet (7620 mm) from the dryer location to the wall or roof termination with not more than two bends. When extra bends are installed, the maximum length of the duct shall be reduced 2.5 feet (762 mm) for each 45-degree (0.79 rad) bend and 5 feet (1524 mm) for each 90-degree (1.6 rad) bend that occur after the first tow bends, measuring in the direction of airflow. The maximum length of the exhaust duct does not include the transition duct.

EXCEPTION: Where the make and model of the clothes dryer to be installed is known and the manufacturer's installation instructions for such dryer are provided to the building official, the maximum length of the exhaust duct, including any transition duct, shall be permitted to be in accordance with the dryer manufacturer's installation requirements.

(34) The amendment of I.R.C. Section M1601.3.4, entitled Duct insulation., item #1, to read as follows:

1. Duct insulation shall conform to the requirements of Table M1601.3.4 and Section N1101.2. Should there be any conflicts between this section and the energy efficiency provisions, the energy efficiency provisions shall take precedence.

   A vapor retarder in accordance with Table M1601.3.4, or aluminum foil having a minimum thickness of 2 mils (0.051 mm), shall be installed on the exterior of insulation on cooling supply ducts that pass through nonconditioned spaces conducive to condensation.

Insulations having a permeance of 0.05 perms [2.87 ng/(Pa·s·m^2)] or less shall not be required to be covered.

(Items 2 and 3 to remain unchanged.)

(35) The addition of I.R.C. Table M1601.3.4, entitled Insulation of Ducts., to read as follows:

Table M1601.3.4 - Insulation of Ducts

Duct Location	**Insulation Types Mechanically Cooled**	**Heating Zone** [1]	**Insulation Types Heating Only**
On roof on exterior of building	C, V[2] and W	I II III	A and W B and W C and W
Attics, garages and crawl spaces	A and V[2]	I II III	A A B
In walls[3], within floor-ceiling spaces[3]	A and V[2]	I II III	A A B
Within the conditioned space or in basements; return ducts in air plenums	None required		None required
Cement slab or within ground	None required		None required

Note: Where ducts are used for both heating and cooling, the minimum insulation shall be as required for the most restrictive condition.

[1] Heating Degree Days:
Zone I below 4,500 D.D.
Zone II 4,501 to 8,000 D.D.
Zone III over 8,000 D.D.

[2] Vapor retarders shall be installed on supply ducts in spaces vented to the outside in geographic areas where the summer dew point temperature based on the 2 ½ percent column of dry-bulb and mean coincident wet-bulb temperature exceeds 60° F. (15.4° C).

[3] Insulation may be omitted on that portion of a duct which is located within a wall- or a floor-ceiling space where:

[3.1] Both sides of the space are exposed to conditioned air.

[3.2] The space is not ventilated.

[3.3] The space is not used as a return plenum.

[3.4] The space is not exposed to unconditioned air.

Ceilings which form plenums need not be insulated.

INSULATION TYPES[4] :

A -- A material with an installed conductance of 0.48 [2.72 W/(m*K)] or the equivalent thermal resistance of 2.1 [0.367 (m*K)/W].

Example of materials capable of meeting the above requirements:

1-inch (25 mm), 0.60 lb./cu.ft. (9.6 kg/m^3) mineral fiber, rock, slag or glass blankets.

½-inch (13 mm), 1.5 to 3 lb./cu.ft. (24 to 48 kg/m^3) mineral fiber blanket duct liner.

½-inch (13 mm), 3 to 10 lb./cu.ft. (48 to 160 kg/m^3) mineral fiber board.

B -- A material with an installed conductance of 0.24 [1.36 W/(m*K)] or the equivalent thermal resistance of 4.2 [0.735 (m*K)/W].

Example of materials capable of meeting the above requirements:

2-inch (51 mm), 0.60 lb./cu.ft. (9.6 kg/m^3) mineral fiber blankets.

1-inch (25 mm), 1.5 to 3 lb./cu.ft. (24 to 48 kg/m^3) mineral fiber blanket duct liner.

1-inch (25 mm), 3 to 10 lb./cu.ft. (48 to 160 kg/m^3) mineral fiber board.

C -- A material with an installed conductance of 0.16 [0.9 W/(m*K)] or the equivalent thermal resistance of 6.3 [1.1 (m*K)/W].

Example of materials capable of meeting the above requirements:

3-inch (76 mm), 0.60 lb./cu.ft. (9.6 kg/m^3) mineral fiber blankets.

1 ½-inch (38 mm), 1.5 to 3 lb./cu.ft. (24 to 48 kg/m^3) mineral fiber blanket duct liner.

1 ½-inch (38 mm), 3 to 10 lb./cu.ft. (48 to 160 kg/m^3) mineral fiber board.

V -- Vapor Retarders: Material with a perm rating not exceeding 0.05 perm [29 ng/Pa*s*m^2]. All joints to be sealed.

W -- Approved weatherproof barrier.

[4] The example of materials listed under each type is not meant to limit other available thickness and density combinations with the equivalent installed

conductance or resistance based on the insulation only.

(36) The amendment of I.R.C. Section M2005.2, entitled Prohibited locations., to read as follows:

M2005.2 Prohibited locations. Fuel-fired water heaters shall not be installed in a room used as a storage closet. Water heaters located in a bedroom or bathroom shall be installed in a sealed enclosure so that combustion air will not be taken from the living space. Access to such enclosure may be from the bedroom or bathroom when through a solid door, weather-stripped in accordance with the exterior door air leakage requirements of the *International Energy Conservation Code* and equipped with an approved self-closing device. Direct-vent water heaters are not required to be installed within an enclosure.

(37) The amendment of I.R.C. Section G2403 (202), entitled General Definitions., to revise the definition of "Unvented Room Heater" to add a sentence to read as follows:

For the purpose of installation, this definition shall also include "Unvented Decorative Appliances."

(38) The amendment of I.R.C. Section G2407.15 (304.15), entitled Combustion air ducts., exception to item #1 to read as follows:

EXCEPTION: Unobstructed stud and joist spaces within dwelling units shall not be prohibited from conveying combustion air, provided that not more than one required fireblock is removed.

(39) The amendment of I.R.C. Section G2408.3 (305.4), entitled Private garages., by deleting it in its entirety.

(40) The amendment of I.R.C. Section G2411.5 (401.5), entitled Identification., to add a second paragraph to read as follows:

Both ends of each section of medium pressure corrugated stainless steel tubing (CSST) shall identify its operating gas pressure with an approved tag. The tags are to be composed of

aluminum or stainless steel and the following wording shall be stamped into the tag:

"WARNING
½ to 5 psi gas pressure
Do Not Remove"

(41) The amendment of I.R.C. Section G2412.3 (402.3), entitled Sizing., to add an exception to read as follows:

EXCEPTION: Corrugated stainless steel tubing (CSST) shall be a minimum of ½".

(42) The amendment of I.R.C. Section G2414.6 (404.6), entitled Piping in solid floors., to read as follows:

G2414.6 (404.6) Piping in solid floors. Piping in solid floor shall be laid in channels in the floor and covered in a manner that will allow access to the piping with a minimum amount of damage to the building. Where such piping is subject to exposure to excessive moisture or corrosive substances, the piping shall be protected in an approved manner. As an alternative to installation in channels, the piping shall be installed in accordance with Section G2414.11 (404.11).

(43) The amendment of I.R.C. Section G2414.9 (404.9), entitled Minimum burial depth., to read as follows:

G2414.9 (404.9) Minimum burial depth. Underground piping systems shall be installed a minimum depth of 18 inches (458 mm) below grade.

(44) The amendment of I.R.C. Section G2414.9.1 (404.9.1), entitled Individual outside appliances., by deleting it in its entirety.

(45) The amendment of I.R.C. Section G2416.4 (406.4), entitled Test pressure measurements., to add a sentence to read as follows:

The equipment used shall be of an appropriate scale such that pressure loss can be easily determined.

(46) The amendment of I.R.C. Section G2416.4.1 (406.4.1), entitled Test pressure., to read as follows:

G2416.4.1 (406.4.1) Test pressure. The test pressure to be used shall be not less than 10 psig (68.9 kPa gauge), or at the discretion of the Code Official, the piping and valves may be tested at a pressure of at least six (6) inches (152 mm) of mercury, measured with a manometer or slope gauge. For welded piping, and for piping carrying gas at pressures in excess of fourteen (14) inches water column pressure (3.48 kPa), the test pressure shall not be less than sixty (60) pounds per square inch (413.4 kPa).

(47) The amendment of I.R.C. Section G2416.4.2 (406.4.2), entitled Test duration., to read as follows:

G2416.4.2 (406.4.2) Test duration. Test duration shall be held for a length of time satisfactory to the Code Official, but in no case for less than fifteen (15) minutes. For welded piping, and for piping carrying gas at pressures in excess of fourteen (14) inches water column pressure (3.48 kPa), the test duration shall be held for a length of time satisfactory to the Code Official, but in no case for less than thirty (30) minutes.

(48) The addition of I.R.C. Section G2419.1.4, entitled Valves in CSST installations., to read as follows:

G2419.1.4 Valves in CSST installations. Shutoff valves installed with corrugated stainless steel (CSST) piping systems shall be supported with an approved termination fitting, or equivalent support, suitable for the size of the valves, of adequate strength and quality, and located at intervals so as to prevent or damp out excessive vibration but in no case greater than 12-inches from the center of the valve. Supports shall be installed so as not to interfere with the free expansion and contraction of the system's piping, fittings, and valves between anchors. All valves and supports shall be designed and installed so they will not be disengaged by movement of the supporting piping.

(49) The amendment of I.R.C. Section G2420.1 (410.1), entitled Pressure regulators., to add a second paragraph and an exception to read as follows:

Access to regulators shall comply with the requirements for access to appliances as specified in Section M1305.

EXCEPTION: A passageway or level service space is not required when the regulator is capable of being serviced and removed through the required attic opening.

(50) The amendment of I.R.C. Section G2437.5 (613.6), entitled Clothes dryer ducts., to add a sentence to read as follows:

The size of duct shall not be reduced along its developed length nor at the point of termination.

(51) The amendment of I.R.C. Section G2437.5.1 (613.6.1), entitled Maximum length., to read as follows:

G2437.5.1 (613.6.1) Maximum length. The maximum length of a clothes dryer exhaust duct shall not exceed 25 feet (7620 mm) from the dryer location to the outlet terminal with not more than two bends. When extra bends are installed, the maximum length of the duct shall be reduced 2 ½ feet (762 mm) for each 45-degree (0.79 rad) bend and 5 feet (1524 mm) for each 90-degree (1.6 rad) bend that occur after the first two bends, measuring in the direction of airflow.

(Exception remains unchanged.)

(52) The amendment of I.R.C. Section G2443.2 (620.2), entitled Prohibited use., to read as follows:

G2443.2 (620.2) Prohibited use. One or more unvented room heaters shall not be used as the sole source of comfort heating in a dwelling unit.

EXCEPTION: Existing approved unvented heaters may continue to be used in dwelling units, in accordance with the code provisions in effect when installed, when approved by the Code Official unless an unsafe condition is determined to exist as described in *International Fuel Gas Code* Section 108.7.

(53) The amendment of I.R.C. Section G2446.1.1 (623.1.1), entitled Installation requirements., to read as follows:

G2446.1.1 (623.1.1) Installation requirements. The requirements for water heaters relative to access, sizing, relief valves, drain pans and scald protection shall be in accordance with this code.

(54) The amendment of I.R.C. Section P2503.5.1, entitled Rough plumbing., to add a second paragraph to item #1 to read as follows:

Shower receptors shall be tested for water tightness by filling with water to the level of the rough threshold. The drain shall be plugged in a manner so that both sides of pans shall be subjected to the test at the point where it is clamped to the drain.

(55) The amendment of I.R.C. Section P2503.7.2, entitled Testing., to read as follows:

P2503.7.2 Testing. Reduced pressure principle backflow preventers, double check valve assemblies, double-detector check valve assemblies and pressure vacuum breaker assembles shall be tested at the time of installation, immediately after repairs or relocation at regular intervals as required by applicable state or local provisions.

(56) The addition of I.R.C. Section P2603.6.1, entitled Sewer depth., to read as follows:

P2603.6.1 Sewer depth. Building sewers shall be a minimum of 12 inches (304 mm) below grade.

(57) The amendment of I.R.C. Section P2708.1, entitled General., to read as follows:

P2708.1 General. Shower compartments shall have at least 900 square inches (0.581 m^2) of floor area and be of sufficient size to inscribe a circle with a diameter not less than 30 inches (762 mm). Hinged shower doors shall open outward. The wall area above built-in tubs having installed shower heads and in-shower compartments shall be constructed as per Section R307.2. Such walls

shall form a water-tight joint with each other and with either the tub, receptor or shower floor. Thresholds shall be of sufficient width to accommodate a minimum twenty-two (22) inch (559 mm) door.

(Exception to remain unchanged.)

(58) The amendment of I.R.C. Section P2709.1, entitled Construction., to add an exception to read as follows:

EXCEPTION: Showers designed to comply with ICC/ANSI A117.1.

(59) The amendment of I.R.C. Section P2710.1, entitled Finished., to read as follows:

P2710.1 Finished. Shower walls shall be finished in accordance with Section R307.2.

(60) The amendment of I.R.C. Section P2803.6.1, entitled Requirements for discharge., to read as follows:

P2803.6.1 Requirements for discharge. The outlet of a pressure relief valve, temperature relief valve or combination thereof, shall not be directly connected to the drainage system. The discharge from the relief valve shall be piped full size separately to the outside of the building or to an indirect waste receptor located inside the building.

In areas subject to freezing, the relief valve shall discharge through an air gap into an indirect waste receptor located within a heated space, or by other approved means. The discharge pipe shall not discharge into the pan required in Section P2801.5.

The discharge shall be installed in a manner that does not cause personal injury or property damage and that is readily observable by the building occupants. The discharge from a relief valve shall be trapped. The diameter of the discharge piping shall not be less than the diameter of the relief valve outlet.

The discharge pipe shall be installed so as to drain by gravity flow and shall terminate

atmospherically. When discharging outside the building, the point of discharge shall be with the end of the pipe not more than two (2) feet (610 mm) nor less than six (6) inches (152 mm) above the ground or the floor level of the area receiving the discharge and pointing downward.

The end of the discharge pipe shall not be threaded.

(61) The amendment of I.R.C. Table P2904.4.1, entitled Water Service Supply and Distribution Piping., by deleting all references (row items 10, 12, and 13) to Polybutylene (PB) plastic pipe and tubing.

(62) The amendment of I.R.C. Section P2904.5, entitled Water distribution pipe., 2904.5.1, entitled Under concrete slabs., and 2904.12, entitled Underground joints., by deleting reference to "PB" plastic pipe.

(63) The amendment of I.R.C. Section P3005.2.6, entitled Base of Stacks., to read as follows:

P3005.2.6 Upper terminal. Each horizontal drain shall be provided with a cleanout at its upper terminal.

EXCEPTION: Cleanouts may be omitted on a horizontal drain less than five (5) feet (1524 mm) in length unless such line is serving sinks or urinals.

(64) The amendment of I.R.C. Section P3103.1, entitled Roof extension., to read as follows:

P3103.1 Roof extension. All open vent pipes which extend through a roof shall be terminated at least six (6) inches (152 mm) above the roof except that where a roof is to be used for any purpose other than weather protection, the vent extensions shall be run at least seven (7) feet (2134 mm) above the roof.

(65) The amendment of I.R.C Section P3105.2, entitled Fixture drains., to read as follows:

P3105.2 Fixture drains. The total fall in a fixture drain due to pipe slope shall not exceed one pipe diameter, nor shall the vent pipe

connection to a fixture drain, except for water closets, be below the weir of the trap.

(66) The amendment of P3105.3, entitled Vertical leg for waste fixture drains., and Figure P3105.3, entitled Vertical leg fixture drain schematic., by deleting them in their entirety.

(67) The amendment of I.R.C. Section P3111.1, entitled Type of fixture., to read as follows:

P3111.1 Type of fixture. A combination waste and vent system shall not serve fixtures other than floor drains, standpipes, indirect waste receptors. Combination drain and vent systems shall not receive the discharge of a food waste grinder.

(68) The amendment of I.R.C. Section P3111.2, entitled Installation., to read as follows:

P3111.2 Installation. The only vertical pipe of a combination drain and vent system shall be the connection between the fixture drain of a standpipe, and the horizontal combination waste and vent pipe. The maximum vertical distance shall be eight (8) feet (2438 mm).

(69) The amendment of I.R.C. Appendix G, Section AG105.2, entitled Outdoor Swimming Pool., by the addition of 8.3 to read as follows:

8.3 Driveway access gates across a paved or improved surface intended for regular vehicle access shall not be located in a swimming pool barrier.

Further, Article I, **Section 1.04**, Subsection (E)(5), is hereby amended so that Subsection (5) shall be and read as follows:

(5) The amendment of I.E.C.C. Section 502.1.1, entitled Moisture control., by revising Exception 2 to read as follows:

2. Buildings located in Climate Zones 5 through 6 as indicated in Table 302.1.

Further, Article I, **Section 1.06**, Subsection (B), is hereby amended so that Subsection (B) shall be and read as follows:

B. In cases where improvements other than those listed in Subsection (A) above are proposed in public easements, application shall be made to the Building Official for the execution of an Easement Use Agreement. If, in the determination of the Building Official after conferring with the other appropriate departments of the City of Arlington, such Easement Use Agreement cannot be executed, the Building Official will refer the request to the Building Code Board of Appeals for final determination upon receipt of an appeal from the applicant.

Further, Article I, **Section 1.06**, Subsection (C), is hereby amended so that said Subsection shall be and read as follows:

C. The City of Arlington shall not be liable for damages or losses of any kind whatsoever by reason of injury to property or person occasioned by the use of any easement. The City shall have no obligations in regards to the maintenance of any improvements within such easement or rights-of-way. The City shall be defended at the cost and expense of the person placing improvements in any easements or rights-of-way from all claims and demands. The use of any easement in rights-of-way shall be discontinued and improvements removed within 30 days of notification by the City and the cost of the discontinuation and removal of improvements shall be borne by the owner of the improvement. The Building Official may terminate and/or modify an Easement Use Agreement after review and concurrence of valid and justifiable reasons and/or conditions.

Further, Article IV, Registration, Permits and Inspections, **Section 4.01**, Subsection (I), is hereby amended so that hereafter said subsection shall be and read as follows:

I. **Exemption for Owner.** Except for permits required by Article VIII below, no such registration procedure shall be required for work to be performed on an existing structure when the person performing the work is the owner of the structure who resides therein as his homestead, and is not assisted by any other person for remuneration. The homeowner shall be automatically

termed a Registrant for the purposes of such a project without registration. Notwithstanding such relief from registration, all requirements for permits for the work and all other applicable provisions of this Building Code shall remain in force.

Further, Article IV, **Section 4.05**, is amended by the addition of Subsection (D), so that hereafter said subsection shall be and read as follows:

D. Upon issuance of a building permit, the Building Official will issue a Field Permit Card representing that a permit has been issued. The Field Permit Card shall contain the address and legal description of the location, the name of the general contractor and a description of the work. The Field Permit Card shall be posted on the job location at all times during time the building permit is valid and may not be removed until such time that the Building Official issues a final approval. The Field Permit Card shall be posted in front of the building so that it is visible from the addressed street or fire lane at all times. Work may be ordered to stop when such Field Permit Card is not displayed in accordance with this section.

Further, Article IV, **Section 4.13**, Subsection (C), is hereby amended by the addition of a new Subsection (3) and the **renumbering** of the remaining subsection so that hereafter said subsection shall be and read as follows:

3. An energy inspection shall be required before the insulation is concealed.

Further, Article IV, **Section 4.14**, Subsection (C), is hereby amended so that hereafter said subsection shall be and read as follows:

C. Certificate Issued. The Building Official shall issue a Certificate of Occupancy upon a finding that the premises complies with the Building Code and provisions of the "Zoning" Chapter of the Code of the City of Arlington. For new structures or when the occupant is of a different character of occupancy or use from the previous certificate holder, the Building Inspections Division shall make an inspection. Where no change in character of occupancy is proposed for a structure previously granted a Certificate of Occupancy, no inspection is necessary unless specifically required by

the Building Official. In the event that a tenant space is being altered, enlarged or reduced in size, or if the Building Official believes that the previous tenant altered the space without benefit of permits, an inspection may be required prior to the occupancy. Other City departments may require inspections prior to the granting of a Certificate of Occupancy.

An applicant for a Sexually Oriented Business as required by the Sexually Oriented Business Chapter of the City Code must first obtain a Certificate of Occupancy for a Sexually Oriented Business from the Building Official. The Building Official shall issue or deny a Certificate Of Occupancy to a Sexually Oriented Business not more than sixty (60) business days subsequent to the date of the applicant's submission of such application to the Building Official. Such application for a Certificate of Occupancy shall be deemed approved if not approved or denied within such time period.

The Certificate of Occupancy shall contain:

1. The address of the building;

2. The name, address and telephone number of the occupant of said premises, building or structure;

3. The allowable use for which the certificate is issued;

4. The zoning district in which the use is located; and

5. Any conditions of the granting of the certificate.

Further, Article IV, **Section 4.14**, is hereby amended by the addition of Subsection (H) so that hereafter said subsection shall be and read as follows:

H. Application Required. Any person, firm or corporation desiring to initially occupy a building or tenant space, to change the tenancy of building or tenant space, change the name or ownership of a business, to expand a lease space, to clean and show a building or tenant space or to acquire a Certificate of Occupancy for a shell building must complete an application and submit to the Building Official for review along with the non-refundable application fee as set forth by

resolution by the City Council. The application shall contain the following information:

1. The address of the application,

2. The proposed business name of the occupant and/or tenant,

3. The proposed use of the building or tenant space,

4. The gross floor area of the proposed use,

5. The individual's name of the principal or owner of the proposed use of the building or lease space, or the name of a presiding officer of a firm, corporation, partnership or other business entity of the proposed use of the building or lease space,

6. The mailing address (other than location being applied for) of the principal or owner,

7. The Texas Driver's License number or other government issued picture identification of the principal or owner,

8. Proof of a State of Texas Limited Sales and Use Tax Certificate with a valid City of Arlington business locations for proposed businesses that will collect a sales and/or use tax, and

9. Other information as determined necessary for the building official to determine that the proposed use satisfies all the development regulations of the City of Arlington.

The application shall be submitted and signed by the principal, owner or designated agent of the principal or owner and the designated agent's Texas Driver's License number or other government issued picture identification certifying that the applicant is authorized agent so empowered to make the application on behalf of the principal or owner and agrees to be subject to the same rules of review and approval as the principal or owner.

Further, Article IV, **Section 4.15**, is hereby amended so that hereafter said subsection shall be and read as follows:

Section 4.15 **<u>Indemnification</u>**

REGISTRANTS UNDER THIS BUILDING CODE SHALL INDEMNIFY, WAIVE ALL CLAIMS, RELEASE, DEFEND AND HOLD HARMLESS THE CITY OF ARLINGTON AND ALL OF ITS OFFICIALS, OFFICERS, AGENTS, EMPLOYEES AND INVITEES, IN BOTH THEIR PUBLIC AND PRIVATE CAPACITIES, FROM ANY AND ALL LIABILITY, CLAIMS, SUITS, DEMANDS OR CAUSES OF ACTION, INCLUDING ALL EXPENSES OF LITIGATION AND/OR SETTLEMENT WHICH ARISE FROM OR RESULT FROM THE ISSUANCE AND EXERCISE OF A PERMIT ISSUED HEREUNDER PURSUANT TO AN APPLICATION FROM A REGISTRANT, WHETHER SUCH CLAIMS AND/OR DAMAGES ARISE BY REASON OF INJURY OR DEATH OF ANY PERSON, OR FOR LOSS OF, DAMAGE TO OR LOSS OF USE OF ANY PROPERTY. SUCH INDEMNITY WILL APPLY WHETHER THE CLAIMS, SUITS, LOSSES, DAMAGES, CAUSES OF ACTION OR LIABILITY ARISE IN PART FROM THE NEGLIGENCE OF THE CITY OF ARLINGTON OR ANY OF ITS OFFICERS, OFFICIALS, AGENTS, EMPLOYEES AND INVITEES IN BOTH THEIR PUBLIC AND PRIVATE CAPACITIES WHETHER SUCH NEGLIGENCE IS CONTRACTUAL COMPARATIVE NEGLIGENCE, CONCURRENT NEGLIGENCE, JOINT NEGLIGENCE, GROSS NEGLIGENCE, ACTIVE NEGLIGENCE, PASSIVE NEGLIGENCE OR ANY OTHER FORM OF NEGLIGENCE.

Further, Article IV, **Section 4.16**, Permits for Demolition or Relocation, is hereby amended so that hereafter said section shall be and read as follows:

Section 4.16 Permits for Demolition or Relocation

Upon receiving an application for a permit to demolish or relocate a building or structure from a person or entity other than a state, city, county or federal government fee simple owner, the Building Official shall determine whether the building or structure is fifty (50) years old or older, or is situated in a Landmark Preservation Overlay ("LP") Zoning District. If the building or structure is fifty (50) years old or older, or the age of the building cannot be ascertained, the Building Official shall notify the applicant of such fact, and follow the procedures set out in Subsection A, below.

If the building or structure is situated in a "LP" Overlay District the Building Official shall notify the applicant of such fact, and follow the procedures set out in Subsection B, below. If the building or structure is less than fifty (50) years old and is not zoned with a "LP" Overlay suffix, the Building Official shall issue a demolition permit if all other requirements of the Code are met.

A. Buildings or Structures that are Fifty (50) Years Old or Older, and Buildings or Structures of Unknown Age

If the building or structure is fifty (50) years old or older, or the age of the building cannot be ascertained, the Building Official shall inform the applicant that the Landmark Preservation Commission or City Council must issue a Certificate of Demolition or Relocation, or the Municipal Court must issue an order before the Building Official may issue the requested permit. The Building Official shall direct the applicant to complete an Application for a Certificate of Demolition and Relocation for filing with the Landmark Preservation Commission, and forward the application to the Landmark Preservation Commission for its review and consideration.

Exception: Compliance with this section is not required upon receipt of an application for demolition or relocation for a structure that has been previously reviewed by the Landmark Preservation Commission in accordance with this chapter.

1. Automatic Stay of Thirty (30) Days. Demolition or relocation of the building or structure shall be automatically stayed for a period of up to thirty (30) days from the date of application to allow the Landmark Preservation Commission an opportunity to determine whether the building or structure is historically significant.

   a. If the building or structure is determined to be historically significant the Landmark Preservation Commission shall provide proper notice and hold a public hearing on the permit application.

   b. If the building or structure is determined not to be historically significant the Landmark Preservation Commission shall so notify the applicant and the Building Official as soon as is reasonably practicable.

2. Public Hearing. Within thirty (30) days of the receipt of a completed application for a Certificate of Demolition or Relocation, the Landmark Preservation Commission shall hold a public hearing. Public notice of such hearing setting forth the date, time and place scheduled for such hearing and the purpose thereof shall be

published in a newspaper one time at least seven (7) days prior to the date scheduled for such hearing.

3. Certificate Deemed Issued by Lack of Action. If the Landmark Preservation Commission takes no action within thirty (30) days of receipt of the completed application, a Certificate of Demolition or Relocation shall be deemed issued by the Landmark Preservation Commission.

4. Review. In evaluating a request for a Certificate of Demolition or Relocation, the Landmark Preservation Commission shall consider the following:

   a. the architectural, cultural, or historical significance of the building or structure;

   b. the age of the building or structure;

   c. the state of repair of the building or structure in question, and the reasonableness of the cost of restoration and repair;

   d. additions, alterations, changes, modifications and updates to the exterior architectural features of the building or structure that would disqualify it from consideration for registration on the National Register of Historic Places;

   e. the impact, if any, that delaying the demolition or relocation of the building or structure will have;

   f. the contribution, if any, the building or structure makes to a previously designated and recognized historic district and the owner's or any predecessor owner's involvement in the formation or creation of such a district;

   g. the willingness of the applicant to donate or sell the building or structure to a third party;

   h. the potential usefulness or adaptive reuse of the building or structure, including economic usefulness;

i. the potential market or demand for such a building or structure in its current condition and location;

j. the purpose that would be served in preserving the building or structure; and,

k. all other factors it finds necessary and appropriate to carry out the intent of this ordinance.

5. Demolition or Relocation Appropriate. If the Landmark Preservation Commission determines that the building or structure should be demolished or removed, the Building Official shall issue a demolition permit if all other requirements of the Code are met.

6. Demolition or Relocation Inappropriate. If the Landmark Preservation Commission determines that the building or structure should not be demolished, the Landmark Preservation Commission may extend the automatic stay for a period of up to thirty (30) additional days. The automatic stay and any additional stay imposed by the Landmark Preservation Commission shall not exceed a total of sixty (60) days from the date application for a permit to demolish or relocate a building or structure was filed.

7. Stay Extended by City Council. Prior to the expiration of the stay period imposed by the Landmark Preservation Commission, the Landmark Preservation Commission may issue a recommendation to the City Council requesting that the stay be extended. After notice to the applicant and a public hearing, the City Council may extend the stay upon a finding that there are reasonable grounds for preservation as well as a reasonable expectation of preserving the building or structure. It shall be the responsibility of the Landmark Preservation Commission and any other proponent of extending the stay on a demolition permit application to demonstrate to the City Council's satisfaction that there exist reasonable grounds for preservation as well as a reasonable expectation of preserving the building or structure.

The City Council may extend the stay on one or more occasions, after notice to the applicant and

a public hearing, in such increments of time as the City Council may determine reasonable. Any extension of the stay on a demolition permit or combination of extensions imposed by the City Council under this provision shall not exceed a cumulative total of ninety (90) days in duration.

In instances where the City Council imposes an extension of the stay for a time period of less than ninety (90) days, the Landmark Preservation Commission may request additional extensions of the stay up to a cumulative total of ninety (90) days from the City Council. Any such request must be submitted to, and acted upon by, the City Council prior to the expiration of any stay period previously imposed by the City Council. The Landmark Preservation Commission shall report to City Council concerning its efforts to preserve the building or structure as a prerequisite to the extension of any stay imposed by the City Council.

In no event shall the stay on a demolition permit and any extensions thereto exceed a total of one hundred fifty (150) days from the date the application for a permit to demolish or relocate a building or structure was filed. If City Council takes no action on the Landmark Preservation Commission's request for an extension within the original stay period or any subsequent extension thereof, a Certificate of Demolition or Relocation shall be deemed issued at the expiration of such stay period.

8. Appeals. Appeals from a decision of the Landmark Preservation Commission shall be to the City Council. Such appeals must be filed with the Historic Preservation Officer within ten (10) days after the complained of decision is made by the Landmark Commission. Such appeals shall be heard by City Council on the next available agenda consistent with the requirements of the Texas Open Meetings Act and with due consideration for the City Council's schedule of business.

9. Permit Issuance. At the end of the stay period and any extension thereof, or upon the City Council's granting an appeal to the Landmark Preservation Commission's determination the Building Official shall issue a demolition permit if all other requirements of the Code are met.

B. Buildings or Structures in a Landmark Preservation Overlay ("LP") Zoning District

If the building or structure is situated in a "LP" Overlay District the Building Official shall inform the applicant that the Landmark Preservation Commission or City Council must issue a Certificate of Demolition or Relocation, or the Municipal Court must issue an order before the Building Official may issue the requested permit. The Building Official shall direct the applicant to complete an Application for a Certificate of Demolition and Relocation for filing with the Landmark Preservation Commission, and forward the application to the Landmark Preservation Commission for its review and consideration.

The Landmark Preservation Commission or City Council must issue a Certificate of Demolition or Relocation, or the Municipal Court must issue an order before the Building Official may issue a permit to demolish or relocate a building or structure situated in a "LP" Overlay District. The Certificate of Demolition or Relocation process, which must be followed, is set out in Section 9-600 of the Zoning Chapter of the Code of the City of Arlington, Texas. In addition to obtaining a Certificate of Demolition or Relocation from the Landmark Preservation Commission or City Council the applicant must meet all other requirements of the Code before the Building Official shall issue a demolition permit.

C. Buildings or Structures that are NOT Located in a Landmark Preservation Overlay ("LP") Zoning District and which are Less Than Fifty (50) Years Old

If the age of a building or structure can be ascertained and the building is less than fifty (50) years old and the building or structure is not zoned with a "LP" Overlay suffix the Building Official shall issue a demolition permit if all other requirements of the Code are met.

Further, **Article XVI**, Dangerous Buildings, is hereby amended so that hereafter said article shall be and read as follows:

ARTICLE XVI

DANGEROUS BUILDINGS

Section 16.01 Authority

This article is adopted pursuant to the authority provided by Chapter 214 of the Texas Local Government Code, as amended. Chapter 214 of the Texas Local Government Code, as amended, is adopted as if set out word for word. In the event of conflict or inconsistency in the wording of state and local law, state law shall prevail unless city ordinances state a more stringent law or procedure authorized in accordance with city home rule authority and relevant law.

Section 16.02 Definitions

A. The following words as used in Articles XVI, XVII and XVIII shall be defined as stated below.

1. "Administrator" shall mean the Director of Neighborhood Services or his designee.

2. "Building" shall mean any structure which is built for the support, shelter, or enclosure or partial enclosure of persons, animals, chattels, or movable property of any kind including pools.

3. "Swimming Pool" or "Pool" shall be defined as referenced in the Health and Sanitation Chapters of the City of Arlington Code of Ordinances.

Section 16.03 Dangerous Building Defined

A. Section 302 of the 1994 edition of the Uniform Code for the Abatement of Dangerous Buildings, as published by the International Conference of Building Officials, is hereby adopted but modified and amended by the following, so that Section 302, entitled "Dangerous Buildings," shall read as follows:

Any building or structure which has defects or conditions described herein is a dangerous building, provided that such condition or defects exist to the extent that the life, health, property or safety of the public or its occupants are endangered:

1. When any door, aisle, passageway, stairway or other means of exit is not of sufficient width or size or is not so arranged as to provide safe and adequate means of exit in case of fire or panic;

2. When the walking surface of any aisle, passageway, stairway or other means of exit is warped, worn, loose, torn or otherwise unsafe so that it would not provide safe and adequate means of exit in case of fire or panic;

3. When the stress in any materials, member or portion thereof, due to all dead and live loads, is more than one and one half (1 1/2) times the working stress or stresses allowed in the Building Code for new buildings of similar structure, purpose or location;

4. When any portion has been damaged by fire, earthquake, wind, flood or by any other cause, to such an extent that the structural strength or stability thereof is materially less than it was before such catastrophe and is less than the minimum requirements of the Building Code for a newly constructed building of like area, height and occupancy;

5. When any portion or member or appurtenance is likely to fail, or to become detached or dislodged, or to collapse and thereby injure persons or damage property;

6. When any portion of the building, or when any member, appurtenance or ornamentation on its exterior is not of sufficient strength or stability, or is not anchored, attached or fastened in place so as to be capable of resisting a wind pressure of one half (1/2) of that specified in the Building Code for a newly constructed building of like area, height and occupancy, without exceeding the working stresses permitted in the Building Code for such buildings;

7. When any portion has wracked, warped, buckled or settled to such an extent that walls or other structural portions have materially less resistance to winds or earthquakes than is required in the case of similar new construction;

8. When the building or any portion thereof is likely to partially or completely collapse because of:

   a. Dilapidation, deterioration or decay;

   b. Faulty construction;

c. The removal, movement or instability of any portion of the ground necessary for the purpose of supporting such building;

d. The deterioration, decay or inadequacy of its foundation; or

e. Any other cause;

9. When, for any reason, the building or any portion thereof is manifestly unsafe for the purpose for which it is being used;

10. When the exterior walls or other vertical structural members list, lean or buckle to such an extent that a plumb line passing through the center of gravity does not fall inside the middle one third of the base;

11. When the building, exclusive of the foundation, shows thirty-three percent (33%) or more damage or deterioration of its supporting member or members, or fifty percent (50%) damage or deterioration of its nonsupporting members, enclosing or outside walls or coverings;

12. If the building was constructed or is maintained in violation of any specific requirement or prohibition applicable to such building provided by the Building Code, or of any law or ordinance of this state or City relating to the condition, location or structure of buildings;

13. If the building has in any nonsupporting part, member or portion less than fifty percent (50%), or in any supporting part, member or portion less than sixty-six percent (66%) of the strength, fire-resisting qualities or characteristics, or weather-resisting qualities or characteristics required by law for a newly constructed building of like area, height and occupancy;

14. If the building is used or intended to be used for dwelling purposes, and because of inadequate maintenance, dilapidation, decay, damage, faulty construction or arrangement, inadequate light, air or sanitation facilities, or otherwise, is determined by the Building Official or Administrator or an authorized representative to be unsanitary, unfit for human habitation or in

such a condition that is likely to cause sickness or disease;

15. If the building, because of obsolescence, dilapidated condition, deterioration, damage, inadequate exits, lack of sufficient fire-resistive construction, faulty electric wiring, gas connections or heating apparatus, or other cause, is determined by the Building Official or Administrator or an authorized representative to be a fire hazard;

16. When any portion of an abandoned building or structure remains on a site after the demolition or destruction of the building or structure;

17. When the building or its curtilage contains accumulations of litter; refuse; garbage; rubbish; junk; animal carcasses; decaying flesh, fish, fowls or vegetables; stagnant water or other stagnant liquid; flammable liquids; slops; trash; or other deposits or substances, which are unwholesome, filthy, unsightly, offensive or unsanitary; likely to create or engender disease; likely to harbor insects or rodents; or likely to pollute storm water;

18. When a building which is partially constructed has not had any significant construction work done on it in the preceding six (6) months, and it is not secured by a fence or other means to prevent children and vagrants from entering the building; or

19. When a building which is partially constructed has not had any significant construction work done on it in the preceding six (6) months, and all building materials and construction equipment and tools have neither been removed from the construction site nor secured at the site to prevent their use by children; their theft; their deterioration; their vandalism; or their harborage of rodents or insects.

B. Any building or structure is a dangerous building when it is unsafe, unsanitary, substandard, unfit for human habitation, not provided with adequate egress, or which constitutes a fire hazard, otherwise dangerous to human life or which constitutes a hazard to the safety, health or welfare of the public or its occupants, for

any reason or by reason of inadequate maintenance, dilapidation, obsolescence, or abandonment.

C. Any building or structure is a dangerous building, regardless of its structural condition,

1. When unoccupied by its owners, lessees, or other invitees and unsecured from unauthorized entry to the extent that it could be entered or used by vagrants or other uninvited persons as a place of harborage or could be entered or used by children, or

2. When boarded up, fenced or otherwise secured in any manner if the means used to secure the building or structure are inadequate to prevent unauthorized entry or use by vagrants or other uninvited persons as a place of harborage, or to prevent entry or use by children, or

3. When boarded up, fenced or otherwise secured in any manner if the building or structure constitutes a danger to the public even though secured from entry.

Section 16.04 <u>Commencement of Hearing</u>

A. **<u>Hearing</u>.** The Administrator may schedule a hearing before the Municipal Court to determine whether a building or structure is a dangerous building and, if so, whether it shall be vacated, secured, repaired, removed, and/or demolished, or any occupants relocated. The Municipal Court shall be known as the "Hearing Authority".

B. **<u>Scheduling of Hearing</u>**. The Administrator may schedule a public hearing:

1. When the Administrator has inspected any building or structure, other than an owner-occupied, single family dwelling, and has determined that such building is a dangerous building, and that such building is fifty (50) years old or older or located in a landmark preservation overlay zoning district, he shall report this determination to the local historic preservation board for review of the building pursuant to § 214.00111, Texas Local Government Code, or any successor statute. Ninety (90) days after the building or structure is placed on the agenda of the local historic

preservation board, the Administrator may schedule a hearing before the Hearing Authority; or

2. When the Administrator has inspected any owner-occupied, single family dwelling and has determined that such building is a dangerous building, he may schedule a hearing before the Hearing Authority.

C. **Issuance of Notice**.

1. The Administrator shall issue a notice of hearing to each owner of the building and to each mortgagee and lienholder of the building and of the property on which it is located, as known by the city and as shown by search of the following records:

   a. Official Public Records of Real Property in Tarrant County, specifically in the Tarrant County Clerk's Office;

   b. Appraisal district records for the appraisal district in which the building is located;

   c. Records of the Texas Secretary of State;

   d. Assumed name records for Tarrant County;

   e. Tax records of the City of Arlington; and

   f. Utility records for the City of Arlington.

2. The Administrator shall issue notice of hearing to all unknown owners, if any, by posting the notice as described in Section 16.04(E)(1).

D. **Contents of Notice**. The notice shall contain:

1. The street address or legal description of the building;

2. A statement that the Administrator has found the building to be dangerous, and a brief description of the conditions found to render the building dangerous under the provisions of Section 16.03;

3. A statement specifying the date, time and place of the hearing; and

4. A statement that the owner, lienholder, or mortgagee will be afforded an opportunity to comment at the hearing and will be required to submit at the hearing proof of the scope of any work that may be required to comply with the minimum standards set out in city ordinance and the time it will take to reasonably perform the work.

E. **Service of Notice**.

1. Notice of the hearing shall be given by certified mail, return receipt requested, or by personal service. If the address of any person entitled to notice cannot be ascertained, or if service cannot be made by mail or in person after a reasonable attempt, and for all unknown owners, service shall be made by posting a copy of the notice on the front door of each improvement situated on the affected property or as close to the front door as practicable.

2. The notice shall be mailed and/or posted before the tenth (10th) day before the date of the hearing. Service by certified mail shall be effective on the date of mailing.

3. Proof of personal service shall be certified at the time of service by a written declaration executed by the person effecting service, declaring the date, time and manner in which service was made. The declaration, together with any receipt card returned in acknowledgment of receipt by certified mail shall be affixed to the copy of the notice retained by the Administrator.

4. Notice of the hearing may be filed in the Official Public Records of Real Property in Tarrant County, specifically in the Tarrant County Clerk's Office. The notice shall contain:

   a. the name and address of the owner of the affected property if that information can be determined;

   b. a legal description of the affected property; and

   c. a description of the hearing.

The filing of the notice is binding on subsequent grantees, lienholders, or other transferees of an interest in the property who acquire such interest after filing of the notice, and constitutes notice of the hearing on any subsequent recipient of any interest in the property who acquires such interest after the filing of the notice.

Section 16.05 Conduct of Hearing

A. **Failure to Appear**. If the owner of the building fails to appear at the hearing after being duly served, the Hearing Authority shall conduct the hearing as if the owner personally appeared.

B. **Subpoena Power**. Witnesses may be subpoenaed in accordance with the procedures set forth in Article XI of the "Administration" Chapter.

C. **Procedure**. The Hearing Authority shall be authorized to establish rules and regulations for the conduct of hearings, if such are consistent with this Chapter, other local ordinances and state law.

D. **Decisions and Orders**.

1. After all evidence has been presented at the hearing, the Hearing Authority shall determine whether the building or structure is a dangerous building. If more than one (1) building is located on a property and is the subject of the hearing, the Hearing Authority shall make a separate determination for each building.

2. The Hearing Authority shall enter orders as set forth below:

a. If the building or structure is declared a dangerous building under Section 16.03, except Subsections (A)(16), (A)(17), (A)(18) and (A)(19), the Hearing Authority shall order the owner, at his option, to repair, remove or demolish the building. The Hearing Authority shall specify a reasonable period of time for the owner to do so.

b. If the building or structure is declared a dangerous building under Subsection 16.03(A)(16), the Hearing Authority shall order the owner to remove or demolish the

building, and shall specify a reasonable period of time for the owner to do so.

c. If the building or structure is declared a dangerous building under Subsection 16.03(A)(17), the Hearing Authority shall order the owner to remove the accumulated matter, and shall specify a reasonable period of time for the owner to do so.

d. If the building or structure is declared a dangerous building under Subsection 16.03(A)(18), the Hearing Authority shall order the owner, at his option, to secure, demolish or remove the building, and shall specify a reasonable period of time for the owner to do so.

e. If the building or structure is declared a dangerous building under Subsection 16.03(A)(19), the Hearing Authority shall order the owner, at his option, to secure or remove all building materials, equipment and tools, and shall specify a reasonable period of time for the owner to do so.

f. If the building or structure is declared a dangerous building under Section 16.03, the Hearing Authority shall order the owner to secure the building, and shall specify a reasonable period of time for the owner to do so. If the owner fails to properly secure the building as ordered, the Administrator may secure the building under Article XVII of this code, assessing expenses and placing liens against the property as authorized by this Chapter.

3. If necessary to protect the health, safety and welfare of the building's occupants, the Hearing Authority shall order the building vacated. If the condition of the building is due to neglect or to intentional or negligent acts by the owner, the Hearing Authority shall order the owner to relocate the occupants at his reasonable expense and in a reasonable manner. The Hearing Authority shall specify a reasonable period of time for the completion of the relocation.

4. The Hearing Authority shall also order an additional reasonable period of time for all

mortgagees or lienholders to comply with the order should the owner fail to comply with the order within the time provided for action by the owner.

5. The Hearing Authority shall also order a civil penalty that the City may assess if the owner fails to repair, remove or demolish the building in accordance with the Hearing Authority's order. Such penalty shall not exceed the amount of One Thousand Dollars and No Cents ($1,000.00) per day that the building is out of compliance with the order.

6. A reasonable period of time to comply with an order of the Hearing Authority is within thirty (30) days from the date of an order:

   a. to secure the building from unauthorized entry, or

   b. to repair, remove or demolish the building, unless the owner or lienholder or mortgagee establishes at the hearing that the work cannot reasonably be performed within thirty (30) days.

7. If the Hearing Authority finds that the work cannot reasonably be performed within thirty (30) days to repair, remove or demolish the building, the Hearing Authority shall order specific time schedules for the commencement and performance of the work and shall order the owner, lienholder, or mortgagee to secure the property in a reasonable manner from unauthorized entry while the work is being performed.

8. The Hearing Authority shall not order the owner, lienholder, or mortgagee more than ninety (90) days to repair, remove, or demolish the building or fully perform all work required to comply with the order unless the owner, lienholder or mortgagee:

   a. submits a detailed plan and time schedule for the work at the hearing; and

   b. the Hearing Authority finds that the work cannot reasonably be completed within ninety (90) days because of the scope and complexity of the work.

9. If the Hearing Authority allows the owner, lienholder or mortgagee to complete any part of the work required to repair, remove or demolish the building within a time period that is more than ninety (90) days, the Hearing Authority shall order that the owner, lienholder or mortgagee regularly submit progress reports to the Administrator and appear before the Hearing Authority or its designee to prove compliance with the time schedule established for commencement and performance of the work. If the owner, lienholder, or mortgagee owns property, including structures or improvements on property, within the City of Arlington that exceeds $100,000 in total value, the Hearing Authority may require the owner, lienholder, or mortgagee to post a cash or surety bond in an amount adequate to cover the cost of repairing, removing, or demolishing a building under this Article. The Hearing Authority may require the owner, lienholder, or mortgagee to provide a letter of credit from a financial institution or a guaranty from a third party approved by the City. The bond must be posted, or the letter of credit or third party guaranty provided, not later than the 30th day after the date the Hearing Authority issues the order.

Section 16.06 <u>Contents of Order</u>

A. An order issued by the Hearing Authority shall be in writing and shall set forth the decisions of the Hearing Authority made pursuant to Section 16.05(D).

B. An order to repair shall set forth those items that need to be repaired.

C. An order to vacate shall require the Administrator to post notice to vacate at or upon each entrance and exit of the building or structure in substantially the form described by Section 16.10.

D. An order shall also contain the following statement:

> "It is further ORDERED that if the owner fails to comply with any part of this order by the specified dates, and if any of the mortgagees or lienholders fail to comply with the order in the owner's stead and by the specified dates, the City is hereby

authorized at its discretion to vacate, secure, repair, remove and/or demolish the building(s) at its own expense. Alternatively, the City is authorized to assess a civil penalty on the owner in the amount of _____ ($_____) per day for each day that the building continues to be in violation of this order. Such costs or penalty shall accrue interest at a rate of ten percent (10%) per annum. The City shall have all remedies provided by law to recover such costs, penalties and interest, and shall be entitled to place a lien on the property unless it is a homestead protected by the Texas Constitution."

E. An order shall be signed by the Municipal Court Judge.

F. A copy of the order shall be sent promptly after the hearing by certified mail, return receipt requested, to the owner of the building and to any lienholder or mortgagee of the building. If a notice is mailed according to this subsection and the United States Postal Service returns the notice as "refused" or "unclaimed", the validity of the notice is not affected, and the notice shall be deemed as delivered.

G. Within ten (10) days after the date the order is issued:

1. a copy of the order shall be filed in the office of the City Secretary; and

2. a notice shall be published in a newspaper of general circulation in the City, said notice containing:

   a. the street address or legal description of the property;

   b. the date of the hearing;

   c. a brief statement indicating the results of the order; and

   d. instructions stating where a complete copy of the order may be obtained.

Section 16.07 <u>Failure to Comply With Order</u>

A. If the owner of a building declared dangerous fails to comply with an order of the Hearing Authority within the allotted time, the Administrator shall cause a copy of the Hearing Authority's order to be sent by certified mail return receipt requested to each lienholder and mortgagee as was determined pursuant to Section 16.04(C). This shall constitute notice to the lienholders and mortgagees that the owner has failed to comply with the order.

B. If the lienholders and mortgagees fail to comply with the order within the time allotted to them by the Hearing Authority, the Administrator may:

1. Vacate, secure, repair, remove and/or demolish the building at the City's expense; or

2. Assess a civil penalty against the owner of the building, as provided by the Hearing Authority, for failure to comply with the order.

C. The Administrator is authorized to repair a building only to the extent necessary to bring the building into compliance with minimum standards, and only if the building is a residential building with ten (10) or fewer units.

D. The Administrator is authorized, if the order requires demolition, to cause the building to be sold and demolished, or to be demolished and the materials, rubble and debris removed and the lot cleaned. Any such demolition work shall be accomplished, and the cost thereof paid and recovered in the manner provided in Article XVIII of this Chapter. Any surplus realized from the sale of any such building or from the demolition thereof over and above the cost of demolition and of cleaning the lot shall be paid to the person or persons lawfully entitled thereto.

E. The Administrator is further authorized to ask the City Attorney to bring suit against the owner in a Tarrant County district court to request that a receiver be appointed to rehabilitate the property.

Section 16.08 <u>Liens for Penalties and Expenses</u>

A. If the City assesses a civil penalty or incurs expenses under this Chapter, the City may assess the expenses or penalty on and place a lien against the land on which

the building was located, unless the land is a homestead protected by the Texas Constitution.

B. A lien imposed pursuant to this article is a privileged lien subordinate only to tax liens and all previously recorded bona fide mortgage liens.

C. The lien arises and attaches to the property at the time the notice of the lien is recorded and indexed in the official public records of real property in Tarrant County, specifically in the office of the county clerk for Tarrant County. The notice shall contain the name and address of the owner if that information can be determined; a legal description of the land on which the building was located; the amount of expenses incurred by the City or the civil penalty and the balance due.

D. A lien under this chapter is extinguished when the property owner or other person with an interest in the legal title to the land pays the City the balance due in full. At the time of sale of properties with the aforementioned privileged lien, the lien shall be released without payment if the purchaser's family income meets the current Department of Housing and Urban Development Low or Moderate Income Requirements for the Fort Worth-Arlington Primary Metropolitan Statistical Area in accordance with federal law.

E. At the time of sale of properties with the aforementioned privileged lien, the lien may be assumed if the purchaser is a 26 U.S.C.A. §501(c)(3) not-for-profit entity with the principal office located in Tarrant County, Texas, the primary purpose of which is constructing or rehabilitating single family homes for people who meet the current Department of Housing and Urban Development (HUD) Low or Moderate Income Requirements for the Fort Worth-Arlington Primary Metropolitan Statistical Area in accordance with federal law.

Section 16.09 <u>Notice and Collection of Penalty and Expenses</u>

A. If the City incurs expenses under this Chapter, the Administrator shall cause a statement to be sent to the owner, setting forth the amount of the expenses and the interest accrued to date. The Administrator may thereafter cause an annual statement to be sent to the owner until the expenses and interest are paid in full.

B. If the City assesses a civil penalty pursuant to this Chapter, the Administrator shall cause a notice to be sent to the owner that the City has begun assessing the penalty provided by the order. Thereafter, the Administrator may cause a monthly statement to be sent to the owner, setting forth the amount of the accrued penalty and interest, until the penalty and interest is paid in full.

C. A civil penalty or assessment for expenses shall accrue interest at the rate of ten percent (10%) per annum or as allowed by law from the date of assessment until paid in full.

D. The City shall be entitled to all remedies provided by law for the collection of debt in order to recover penalty, expenses and interest. However, the City shall not be entitled to foreclose a lien for repair

expenses if the property on which the repairs were made is occupied as a residential homestead by a person sixty-five (65) years of age or older.

Section 16.10 <u>Notice to Vacate; Violations</u>

A. Every notice to vacate shall be posted at or upon each entrance and exit of the building and shall be in substantially the following form:

DO NOT ENTER
UNSAFE TO OCCUPY

It is a misdemeanor to occupy this building,
or to remove or deface this notice.

Director of Neighborhood Services
City of Arlington

The Notice to Vacate shall specify the conditions which necessitate the posting and recite the emergency or shall identify the order to vacate and state where a complete copy of the order may be obtained.

B. **<u>Compliance; Violations</u>**

No person shall remain in or enter any building which has been posted, except that entry may be made to repair, remove, demolish or secure such building under permit. No person shall remove or deface any such notice after it is posted until the required work has been completed and a Certificate of Occupancy is issued pursuant to the provisions of the Building Code. Any person violating this subsection shall be guilty of a misdemeanor punishable by a fine not to exceed Two Thousand Dollars and No Cents ($2,000.00).

Section 16.11 <u>Other Enforcement</u>

A. An owner who fails to comply with an order of the Hearing Authority shall be guilty of a misdemeanor punishable by a fine not to exceed Two Thousand Dollars and No Cents ($2,000.00).

B. Each day that a violation continues shall constitute a separate offense.

C. A criminal prosecution shall be in addition to any civil remedies to which the City is entitled. The remedies provided by this article shall be in addition to the remedies provided by this chapter or any other applicable ordinance or statute.

D. No person shall obstruct, impede or interfere with any officer, employee, contractor or authorized representative of the City or with any person who owns or holds an estate or interest in any building or structure which has been ordered repaired, removed, secured, vacated or demolished under the provisions of this Code, or with any person to whom such building has been lawfully sold, whenever such officer, employee, contractor or authorized representative of the City, person having an interest or estate in such building or structure, or purchaser is engaged in the work as ordered or in performing any necessary act preliminary to or incidental to such work. A person who obstructs, impedes or interferes with an order of the Hearing Authority shall be guilty of a misdemeanor punishable by a fine not to exceed Two Thousand Dollars and No Cents ($2,000.00).

E. It is a violation for any person, firm or corporation to own, lease, use, occupy or maintain a dangerous building as defined in this Article, or to cause or permit the same to be done, in the City of Arlington. A violator shall be guilty of a misdemeanor punishable by a fine not to exceed Two Thousand Dollars and No Cents ($2,000) for each violation pursuant to the enforcement, violation and penalties provisions of Section 1.08 of this Chapter.

Section 16.12 <u>Swimming Pool Enclosures</u>

A. The Administrator may repair, replace, secure, or otherwise remedy a swimming pool enclosure or fence that is damaged, deteriorated, substandard, dilapidated, or otherwise in a state that poses a hazard to the public health, safety, and welfare.

B. The Administrator may require the owner of the property on which the swimming pool or enclosure or fence is situated, after notice and hearing as provided in this Chapter, to repair, replace, secure, or otherwise remedy an enclosure or fence of a swimming pool that the Administrator determines violates minimum standards in accordance with state or city law.

C. If the enclosure or fence is on unoccupied property or is on property occupied only by persons who do not have a right of possession to the property, the Administrator shall give notice to the owner, in accordance with the procedures set out in this Chapter, of the municipality's action to repair, replace, secure, or otherwise remedy an enclosure or fence of a swimming pool.

D. If the City incurs expenses under this Article, the Administrator may assess the expenses on, and the City has a lien against the property on which the swimming pool or the enclosure or fence is situated, unless it is a homestead as protected by the Texas Constitution. The lien is extinguished if the property owner or another person having an interest in the legal title to the property reimburses the City for the expenses. The lien arises and attaches to the property at the time the lien is recorded in the office of the Tarrant County Clerk. The lien must contain the name and address for the owner if that information can be determined with a reasonable effort, a legal description of the real property on which the swimming pool or the enclosure or fence is situated, the amount of expenses incurred by the City, and the balance due. The lien is a privileged lien subordinate only to tax liens and all previously recorded bona fide mortgage liens attached to the real property to which the City's lien attaches.

E. It is a violation for any person, firm or corporation to maintain a swimming pool enclosure or fence that is damaged, deteriorated, substandard, dilapidated or otherwise in a state that poses a hazard to the public health, safety, and welfare or to cause or permit the same to be done in the City of Arlington. A violator shall be guilty of a misdemeanor punishable by a fine not to exceed One Thousand Dollars and No Cents ($1,000) for each violation. Each day a violation occurs constitutes a separate offense.

Further, **Article XVII**, Additional Authority to Secure Building, is hereby amended so that hereafter said article shall be and read as follows:

ARTICLE XVII

ADDITIONAL AUTHORITY TO SECURE BUILDING

Section 17.01 <u>Authority to Secure Building</u>

The Administrator may secure or cause to be secured a building at the City's expense if he determines:

1. That the building or structure violates the minimum standards for the use and occupancy of buildings in the City regardless of the date of their construction, and

2. That the building or structure is unoccupied or is occupied only by persons who do not have a right of possession to the building.

Section 17.02 <u>Issuance of Notice</u>

Before the eleventh (11th) day after the date the building is secured pursuant to Section 17.01, the Administrator will give notice to the owner that the building has been secured. The Administrator may also give notice to each mortgagee and lienholder, and to any unknown owners, in the same manner as described by Section 16.04(C).

Section 17.03 <u>Contents of Notice</u>

The notice will contain:

1. An identification of the building and the property on which it is located; and

2. A description of the violation of the ordinance that is present at the building; and

3. A statement that the City has secured the building; and

4. A statement explaining the owner's right to request a hearing about any matter relating to the City's securing of the building.

Section 17.04 <u>Service of Notice</u>

Notice regarding the securing of the building shall be given by either:

1. personally serving the owner with written notice; or

2. depositing the notice in the United States mail addressed to the owner at the owner's post office address; or

3. if personal service cannot be obtained and the owner's post office address is unknown;

    a. publishing the notice at least twice within a ten (10) day period in the official newspaper of the City; or

    b. posting the notice on or near the front door of the building.

Section 17.05 <u>Hearing</u>

If, within thirty (30) days after the date a building is secured pursuant to this Chapter, the owner files with the Administrator a written request for a hearing, the Administrator will schedule a hearing before the Hearing Authority. At the hearing the owner may testify or present witnesses or written information about any matter relating to the City's securing of the building.

A. **<u>Scheduling of Hearing</u>** The Hearing Authority will conduct the hearing within twenty (20) days after the date the request is filed.

B. **<u>Notice of Hearing</u>** Notice of the hearing shall be provided to the requestor by personal service or certified mail, return receipt requested, before the 10th day before the hearing, in the same manner as provided in Section 16.04(E)(2) and (3).

Section 17.06 <u>Liens and Collection of Expenses</u>

If the City incurs expenses under Section 17.01, the City may assess the expenses on and place a lien against the land on which the building is located, in accordance with this Chapter.

Further, **Article XVIII**, Performance of Work and Recovery of Cost, is hereby amended so that hereafter said article shall be and read as follows:

ARTICLE XVIII

PERFORMANCE OF WORK AND RECOVERY OF COST

Section 18.01 General Procedure

When any work to repair, remove, secure, vacate, or demolish is to be done pursuant to this code, the Administrator shall cause the work to be accomplished by City personnel or by private contract under the direction of the Administrator, or he may employ such architectural, engineering, or other specialized assistance on a contract basis as reasonably necessary.

Section 18.02 Account of Expense, Filing of Report: Contents

The Administrator shall keep an itemized account of the expense incurred by this jurisdiction for the work to repair, remove, secure, vacate or to demolish any building pursuant to the provisions of this Chapter. Upon the completion of the work, the Administrator shall prepare a report specifying the work done, the itemized and total cost of the work, a description of the real property upon which the building or structure is or was located and the names and addresses of the persons entitled to notice.

Section 18.03 Report Transmitted to Hearing Authority - Set for Hearing

Upon completion of the expense report, the Administrator shall present it to the Hearing Authority for consideration. The Hearing Authority shall fix a time, date and place for hearing the report, and any protests or objections. The Administrator shall cause notice of said hearing to be posted upon the property involved, published once in a newspaper of general circulation in the City and served by certified mail, postage prepaid, addressed to the owner of the property as his name and address appear on the last assessment roll of the county, if such so appear, or as known to the Administrator. Such notice shall be given at least ten (10) days prior to the date set for hearing and shall specify the day, hour and place when the Hearing Authority will hear and pass upon the Administrator's

report, together with any objections or protests which may be filed as hereinafter provided by any person interested in or affected by the proposed charge.

Section 18.04 Protests and Objections - How Made

Any person interested in or affected by the proposed report may file written protests or objections with the Administrator at any time prior to the time set for the hearing on the report of the Administrator. Each such protest or objection must contain a description of the property in which the signer thereof is interested and the grounds of each such protest or objection. The Administrator shall endorse on every such protest or objection the date it was received. He shall present such protests or objections to the Hearing Authority at the time set for the hearing, and no other protests or objections shall be considered.

Section 18.05 Hearing of Protests

Upon the day and hour fixed for the hearing, the Hearing Authority shall hear and pass upon the report of the Administrator together with any such objections or protests. The Hearing Authority may make such revision, correction or modification in the report or the charge as it may deem just; and when the Hearing Authority is satisfied with the correctness of the charge, the report (as submitted or as revised, corrected or modified) together with the charge, shall be confirmed or rejected. The decision of the Hearing Authority, on the report and the charge and on all protests or objections, shall be final and conclusive, subject to appeal no later than thirty (30) days after the report is adopted or revised by the Hearing Authority.

Section 18.06 Assessment

A. **General.** The Hearing Authority may thereupon assess said charge against the property involved.

B. **Assessment.** If the Hearing Authority orders that the charge shall be assessed against the property, it shall confirm the charge, cause the same to be recorded and thereafter, said assessment shall constitute an assessment against and a lien upon the property.

Section 18.07 Contest

The validity of any assessment made under the provisions of this Article shall not be contested in any action or proceeding unless the same is commenced within thirty (30) days after the assessment is placed upon the property as provided herein. Any appeal from a final judgment in such action or proceeding must be perfected within thirty (30) days after the entry of such order by the Hearing Authority.

Section 18.08 <u>Authority for Installation Payment of Assessments with Interest</u>

The Hearing Authority, in its discretion, may determine that assessments in amounts of $500.00 or more shall be payable in not to exceed five (5) equal annual installments. The Hearing Authority determination to allow payment of such assessments in installments, the number of installments, whether they shall bear interest and the rate thereof shall be by order adopted prior to, or at the same time as the confirmation of the assessment.

Section 18.09 <u>Lien of Assessment</u>

A. **<u>Priority</u>.** Immediately upon its recording, the assessment shall be deemed to be complete, the amount assessed shall be payable, and the assessments shall be liens against the lots or parcels of land assessed, respectively. The lien shall be subordinate to all existing assessment liens previously imposed upon the same property and shall be paramount to all other liens except for state, county and municipal taxes, with which it shall be upon a parity. The lien shall continue until the assessment and all interest due and payable thereon are paid.

B. **<u>Interest</u>.** All such assessments remaining unpaid after thirty (30) days from the date of recording shall become delinquent and shall bear interest at the rate of ten percent (10%) per annum or as allowed by law from and after said date.

C. A lien under this chapter is extinguished when the property owner or other person with an interest in the legal title to the land pays the City the balance due in full. At the time of sale of properties with the aforementioned lien, the lien shall be released without payment if the purchaser's family income meets the current Department of Housing and Urban Development Low or Moderate Income Requirements for the Fort Worth-

Arlington Primary Metropolitan Statistical Area in accordance with federal law.

D. At the time of sale of properties with the aforementioned lien, the lien may be assumed if the purchaser is a 26 U.S.C.A. §501(c)(3) not-for-profit entity with the principal office located in Tarrant County, Texas, the primary purpose of which is constructing or rehabilitating single family homes for people who meet the current Department of Housing and Urban Development Low or Moderate Income Requirements for the Fort Worth-Arlington Primary Metropolitan Statistical Area in accordance with federal law.

2.

Any person, firm, corporation, agent or employee thereof who violates any of the provisions of this ordinance shall be guilty of a misdemeanor and upon conviction thereof shall be fined an amount not to exceed Two Thousand and No/100 Dollars ($2000) for each offense. Each day that a violation is permitted to exist shall constitute a separate offense.

3.

This ordinance shall be and is hereby declared to be cumulative of all other ordinances of the City of Arlington, and this ordinance shall not operate to repeal or affect any of such other ordinances except insofar as the provisions thereof might be inconsistent or in conflict with the provisions of this ordinance, in which event such conflicting provisions, if any, in such other ordinance or ordinances are hereby repealed.

4.

If any section, subsection, sentence, clause or phrase of this ordinance is for any reason held to be unconstitutional, such holding shall not affect the validity of the remaining portions of this ordinance.

5.

All of the regulations provided in this ordinance are hereby declared to be governmental and for the health, safety and welfare of the general public. Any member of the City Council or any City official or employee charged with the enforcement of this ordinance, acting for the City of Arlington in the discharge of his/her duties, shall not

thereby render himself/herself personally liable; and he/she is hereby relieved from all personal liability for any damage that might accrue to persons or property as a result of any act required or permitted in the discharge of his/her said duties.

6.

Any violation of this ordinance can be enjoined by a suit filed in the name of the City of Arlington in a court of competent jurisdiction, and this remedy shall be in addition to any penal provision in this ordinance or in the Code of the City of Arlington.

7.

The caption of this ordinance shall be published in a newspaper of general circulation in the City of Arlington, in compliance with the provisions of Article VII, Section 15, of the City Charter. Further, this ordinance may be published in pamphlet form and shall be admissible in such form in any court, as provided by law.

8.

This ordinance shall become effective ten (10) days after first publication as described above.

PRESENTED AND GIVEN FIRST READING on the **6th** day of **January**, **2004**, at a regular meeting of the City Council of the City of Arlington, Texas; and GIVEN SECOND READING, passed and approved on the **13th** day of **January**, **2004**, by a vote of **9** ayes and **0** nays at a regular meeting of the City Council of the City of **Arlington, Texas**.

ORDINANCE NO. 04-042

AN ORDINANCE AMENDING THE **"CONSTRUCTION"** CHAPTER OF THE CODE OF THE CITY OF ARLINGTON, TEXAS, 1987, THROUGH THE AMENDMENT OF **ARTICLE II**, ENTITLED BUILDING CODE BOARD OF APPEALS, AT **SECTION 2.01**, APPOINTMENT; AT **SECTION 2.02**, TERM OF OFFICE; AT **SECTION 2.03**, QUORUM, RELATIVE TO THE APPOINTMENT OF BOARD MEMBERS; PROVIDING FOR A FINE OF UP TO $2,000 FOR EACH VIOLATION OF THIS ORDINANCE; PROVIDING THIS ORDINANCE BE CUMULATIVE; PROVIDING FOR SEVERABILITY; PROVIDING FOR GOVERNMENTAL IMMUNITY; PROVIDING FOR INJUNCTIONS; PROVIDING FOR PUBLICATION AND BECOMING EFFECTIVE TEN DAYS AFTER FIRST PUBLICATION

BE IT ORDAINED BY THE CITY COUNCIL OF THE CITY OF ARLINGTON, TEXAS:

1.

That the **"Construction"** Chapter of the Code of the City of Arlington, Texas, 1987, is hereby amended through the amendment of Article II, Building Code Board of Appeals, by the amendment of **Section 2.01**, Appointment, so that said section shall be and read as follows:

Section 2.01 Appointment

There is hereby established a Board to be called the Building Code Board of Appeals (hereinafter called "the Board"), which shall consist of nine (9) members who are residents of the City of Arlington. Such Board shall be composed of one (1) architect, one (1) general contractor or engineer, one (1) member with experience in the area of fire protection and fire safety, and the remaining members shall be selected at large from the building industry. The Mayor and each City Council member shall nominate a member with confirmation by majority vote of the City Council in accordance with the City of Arlington Boards and Commissions Policy Statement.

Further, Article II is hereby amended by the amendment of **Section 2.02**, Term of Office, so that said section shall be and read as follows:

Section 2.02 Term of Office

Place numbers shall be assigned to each member of the Board. The term of office for Board members shall be for two (2) years. Vacancies shall be filled for an unexpired term in the same manner as the original appointments. Continued absence of any

member from regular meetings of the Board shall, at the discretion of the City Council, render any such member liable to immediate removal from office. Members shall serve at the will and pleasure of the City Council.

Further, Article II is hereby amended by the amendment of **Section 2.03**, Quorum, so that said section shall be and read as follows:

Section 2.03 Quorum

Five (5) members of the Board shall constitute a quorum for the transaction of business. A simple majority of members present shall be required to vary the application of any provision of this Building Code or to modify any order of the Building Official.

2.

Any person, firm, corporation, agent or employee thereof who violates any of the provisions of this ordinance shall be guilty of a misdemeanor and upon conviction thereof shall be fined an amount not to exceed Two Thousand and No/100 Dollars ($2000) for each offense. Each day that a violation is permitted to exist shall constitute a separate offense.

3.

This ordinance shall be and is hereby declared to be cumulative of all other ordinances of the City of Arlington, and this ordinance shall not operate to repeal or affect any of such other ordinances except insofar as the provisions thereof might be inconsistent or in conflict with the provisions of this ordinance, in which event such conflicting provisions, if any, in such other ordinance or ordinances are hereby repealed.

4.

If any section, subsection, sentence, clause or phrase of this ordinance is for any reason held to be unconstitutional, such holding shall not affect the validity of the remaining portions of this ordinance.

5.

All of the regulations provided in this ordinance are hereby declared to be governmental and for the health, safety and welfare of the general public. Any member of the City Council or any City official or employee charged with the enforcement of this ordinance, acting for the City of Arlington in the discharge of his/her duties, shall not thereby render himself/herself personally liable; and he/she is hereby relieved from all personal liability for any damage that might accrue to persons or property as a result of any act required or permitted in the discharge of his/her said duties.

6.

Any violation of this ordinance can be enjoined by a suit filed in the name of the City of Arlington in a court of competent jurisdiction, and this remedy shall be in addition to any penal provision in this ordinance or in the Code of the City of Arlington.

7.

The caption and penalty clause of this ordinance shall be published in a newspaper of general circulation in the City of Arlington, in compliance with the provisions of Article VII, Section 15, of the City Charter. Further, this ordinance may be published in pamphlet form and shall be admissible in such form in any court, as provided by law.

8.

This ordinance shall become effective ten (10) days after first publication as described above.

PRESENTED AND GIVEN FIRST READING on the **27th** day of **April**, **2004**, at a regular meeting of the City Council of the City of Arlington, Texas; and GIVEN SECOND READING, passed and approved on the **11th** day of **May**, **2004**, by a vote of **8** ayes and **1** nays at a regular meeting of the City Council of the City of **Arlington, Texas**.

ORDINANCE NO. 04-075

AN ORDINANCE AMENDING THE **"CONSTRUCTION"** CHAPTER OF THE CODE OF THE CITY OF ARLINGTON, TEXAS, 1987, THROUGH THE AMENDMENT OF **ARTICLE I**, BUILDING CODE, **SECTION 1.04**, AMENDMENTS, ADDITIONS AND DELETIONS, SUBSECTION (D)(69), RELATIVE TO SWIMMING POOLS, SPAS AND HOT TUBS; THROUGH THE AMENDMENT OF **ARTICLE IV**, REGISTRATION, PERMITS AND INSPECTIONS, **SECTION 4.14**, CERTIFICATE OF OCCUPANCY, RELATIVE TO DISCONNECTION OF ELECTRICAL SERVICE; PROVIDING FOR A FINE OF UP TO $2000 FOR EACH OFFENSE IN VIOLATION OF THE ORDINANCE; PROVIDING THIS ORDINANCE BE CUMULATIVE; PROVIDING FOR SEVERABILITY; PROVIDING FOR GOVERNMENTAL IMMUNITY; PROVIDING FOR INJUNCTIONS; PROVIDING FOR PUBLICATION AND BECOMING EFFECTIVE TEN DAYS AFTER FIRST PUBLICATION

BE IT ORDAINED BY THE CITY COUNCIL OF THE CITY OF ARLINGTON, TEXAS:

1.

That the **"Construction"** Chapter of the Code of the City of Arlington, Texas, 1987, is hereby amended through the amendment of Article I, Building Code, **Section 1.04**, Amendments, Additions and Deletions, Subsection (D)(69), so that hereafter said subsection shall be and read as follows:

(69) The amendment of I.R.C. Appendix G, entitled *Swimming Pools, Spas and Hot Tubs*, to read as follows:

APPENDIX G
SWIMMING POOLS, SPAS AND HOT TUBS

SECTION AG 101
GENERAL

AG 101.1 General. The provisions of this appendix shall control the design and construction of swimming pools, spas and hot tubs installed in or on the lot of a one- and two-family dwelling.

SECTION AG 102

PERMITS AND INSPECTIONS

AG 102.1 Permit Required. A permit shall be required to construct and/or erect a swimming pool. A permit may only be issued to a registrant as set out in Article IV of the Construction Chapter.

AG 102.2 Submittal required. An application for a permit to construct and/or erect a swimming pool shall be accompanied by the following:

1. Two (2) site plans indicating the location of the proposed swimming pool and the associated swimming pool decks on the lot that have been stamped by the electrical service provider,
2. Lot grading plans, including surface drain inlets and discharges, for both before and after construction,
3. The plans for pool barrier compliance, and
4. Any additional information that may be required by the Building Official.

AG 102.3 Inspection required. After an application for a permit to construct and/or erect a swimming pool has been issued in accordance with Article IV of the Construction Chapter, the following inspections are required as a minimum as applicable:

1. Belly steel inspection,
2. Electrical bonding inspection,
3. Underground electrical inspection,
4. Underground plumbing and gas piping inspection, and
5. Final inspection to include verification of swimming pool barrier compliance (prior to plastering the swimming pool).

AG 102.4 Lot grading and surface drainage. The construction and/or erection of a swimming pool may not alter the lot grading or drainage patterns intended by the lot’s approved grading plan and/or the subdivision’s approved grading and drainage plans. The point of discharge of collected surface drains and rain gutters may not exit onto adjacent properties as a concentrated point of discharge.

AG 102.5 It shall be unlawful for the registrant to permit or cause the swimming pool to be filled with

water before the existence of a lawful swimming pool barrier is inspected and approved.

SECTION AG 103
DEFINITIONS

AG 103.1 General. For the purposes of these requirements, the terms used shall be defined as follows and as set forth in Chapter 2.

ABOVE-GROUND/ON-GROUND POOL. See "Swimming pool."

BARRIER. A fence, wall, building wall or combination thereof which completely surrounds the swimming pool and obstructs access to the swimming pool.

HOT TUB. See "Swimming pool."

IN-GROUND POOL. See "Swimming pool."

POOL DECK. A flat walking surface consisting of wood, stone, brick, concrete or other similar material located within 5 feet (1524 mm) of the water's edge of a swimming pool.

RESIDENTIAL. That which is situated on the premises of a detached one- or two-family dwelling or a one-family townhouse not more than three stories in height.

SELF-CLOSING GATE. A gate which closes or shuts automatically without the aid of human, electrical, solar or battery power after being opened.

SELF-CLOSING AND SELF-LATCHING DEVICE. A device that causes a gate to automatically close and latch without human, electrical, solar or battery power.

SPA, NONPORTABLE. See "Swimming pool."

SPA, PORTABLE. A nonpermanent structure intended for recreational bathing, in which all controls, water-heating and water-circulating equipment are an integral part of the product.

SWIMMING POOL. Any structure intended for swimming or recreational bathing that contains water over 24 inches

(610 mm) deep. This includes in-ground, above-ground and on-ground swimming pools, hot tubs and spas.

SWIMMING POOL, INDOOR. A swimming pool which is totally contained within a structure and surrounded on all four sides by walls of said structure.

SWIMMING POOL, OUTDOOR. Any swimming pool which is not an indoor pool.

SECTION AG 104
SWIMMING POOLS

AG 104.1 In-ground pools. In-ground pools shall be designed and constructed in conformance with ANSI/NSPI-5 as listed in Section AG108.

AG 104.2 Above-ground and on-ground pools. Above-ground and on-ground pools shall be designed and constructed in conformance with ANSI/NSPI-4 as listed in Section AG108.

SECTION AG 105
SPAS AND HOT TUBS

AG 105.1 Permanently installed spas and hot tubs. Permanently installed spas and hot tubs shall be designed and constructed in conformance with ANSI/NSPI-3 as listed in Section AG 108.

AG 105.2 Portable spas and hot tubs. Portable spas and hot tubs shall be designed and constructed in conformance with ANSI/NSPI-6 as listed in Section AG108.

SECTION AG 106
BARRIER REQUIREMENTS

AG 106.1 Application. The provisions of this chapter shall control the design of barriers for residential swimming pools, spas and hot tubs. These design controls are intended to provide protection against potential drownings and near-drownings by restricting access to swimming pools, spas and hot tubs.

AG 106.2 Outdoor swimming pool. An outdoor swimming pool, including an in-ground, above-ground or on-ground

pool, hot tub or spa shall be provided with a barrier which shall comply with the following:

1. The top of the barrier shall be at least 48 inches (1219 mm) above grade measured on the side of the barrier which faces away from the swimming pool. The maximum vertical clearance between grade and the bottom of the barrier shall be 2 inches (51 mm) measured on the side of the barrier which faces away from the swimming pool. Where the top of the pool structure is above grade, such as an above-ground pool, the barrier may be at ground level, such as the pool structure, or mounted on top of the pool structure. Where the barrier is mounted on top of the pool structure, the maximum vertical clearance between the top of the pool structure and the bottom of the barrier shall be 4 inches (102 mm).
2. Openings in the barrier shall not allow passage of a 4-inch-diameter (102 mm) sphere.
3. Solid barriers which do not have openings, such as a masonry or stone wall, shall not contain indentations or protrusions except for normal construction tolerances and tooled masonry joints.
4. Where the barrier is composed of horizontal and vertical members and the distance between the tops of the horizontal members is less than 45 inches (1143 mm), the horizontal members shall be located on the swimming pool side of the fence. Spacing between vertical members shall not exceed 1.75 inches (44 mm) in width. Where there are decorative cutouts within vertical members, spacing within the cutouts shall not exceed 1.75 inches (44 mm) in width.

   EXCEPTION: When the horizontal members are part of a fence that is at least 6 feet (1829 mm) in height, the horizontal members need not be on the pool side of the barrier.
5. Where the barrier is composed of horizontal and vertical members and the distance between the tops of the horizontal members is 45 inches (1143 mm) or more, spacing between vertical members shall not exceed 4 inches (102 mm). Where there are decorative cutouts within vertical members, spacing within the cutouts shall not exceed 1.75 inches (44 mm) in width.
6. Maximum mesh size for chain link fences shall be a 1.25-inch (32 mm) square unless the fence is

provided with slats fastened at the top or the bottom which reduce the openings to not more than 1.75 inches (44 mm).

7. Where the barrier is composed of diagonal members, such as a lattice fence, the maximum opening formed by the diagonal members shall not be more than 1.75 inches (44 mm).
8. Access gates shall comply with the requirements of Section AG 106.2, Items 1 through 7, and shall be equipped to accommodate a locking device. Pedestrian access gates shall open outward away from the pool and shall be self-closing and have a self-latching device. Gates other than pedestrian access gates shall have a self-latching device. Where the release mechanism of the self-latching device is located less than 54 inches (1372 mm) from the bottom of the gate, the release mechanism and openings shall comply with the following:
   - 8.1. The release mechanism shall be located on the pool side of the gate at least 3 inches (76 mm) below the top of the gate, and
   - 8.2. The gate and barrier shall have no opening greater than 0.5 inch (12.7 mm) within 18 inches (457 mm) of the release mechanism.
   - 8.3. Driveway access gates across a paved or improved surface intended for regular vehicle access shall not be located in a swimming pool barrier.
9. Where a wall of a dwelling serves as part of the barrier one of the following conditions shall be met:
   - 9.1. All doors with direct access to the pool through that wall shall be equipped with an alarm which produces an audible warning when the door and its screen, if present, are opened. The alarm shall sound continuously for a minimum of 30 seconds immediately after the door is opened and be capable of being heard throughout the house during normal household activities. The alarm shall automatically reset under all conditions. The alarm system shall be equipped with a manual means, such as touchpad or switch, to temporarily deactivate the alarm for a single opening. Such deactivation shall last for not more than 15 seconds. The deactivation switch(es) shall be located at least 54 inches (1372 mm) above the threshold of the door; or

9.2. Other means of protection, such as self-closing doors with self-latching devices, which are approved by the governing body, shall be acceptable so long as the degree of protection afforded is not less than the protection afforded by Item 9.1 described above.

10. Where an above-ground pool structure is used as a barrier or where the barrier is mounted on top of the pool structure and the means of access is a ladder or steps, then:

10.1. The ladder or steps shall be capable of being secured, locked or removed to prevent access, or

10.2. The ladder or steps shall be surrounded by a barrier which meets the requirements of Section AG 106.2, Items 1 through 9. When the ladder or steps are secured, locked or removed, any opening created shall not allow the passage of a 4-inch-diameter (102 mm) sphere.

AG 106.3 Indoor swimming pool. All walls surrounding an indoor swimming pool shall comply with Section AG 106.2, Item 9.

AG 106.4 Prohibited locations. Barriers shall be located so as to prohibit permanent structures, equipment or similar objects from being used to climb the barriers.

AG 106.5 Barrier exceptions. Spas or hot tubs with a safety cover which complies with ASTM F 1346, as listed in Section AG 108, shall be exempt from the provisions of this appendix.

SECTION AG 107
ABBREVIATIONS

AG 107.1 General.

ANSI-American National Standards Institute, 11 West 42nd Street, New York, NY 10036

ASTM-American Society for Testing and Materials, 1916 Race Street, Philadelphia, PA 19103

NSPI-National Spa and Pool Institute, 2111 Eisenhower Avenue, Alexandria, VA 22314

SECTION AG 108
STANDARDS

AG 108.1 General.

ANSI/NSPI

ANSI/NSPI-3 Standard for Permanently Installed Residential Spas . . . . . AG 104.1

ANSI/NSPI-4 Standard for Above-ground/On-ground Residential Swimming Pools. . . . . .AG 103.2

ANSI/NSPI-5 Standard for Residential In-ground Swimming Pools. . . . . AG 103.1

ANSI/NSPI-6 Standard for Residential Portable Spas. . . . . .AG l04.2

ASTM

ASTM F 1346-91 Standard Performance Specifications for Safety Covers and Labeling Requirements for All Covers for Swimming Pools, Spas and Hot Tubs. . . . . AG 105.2, AG l05.5

Further, Article IV, Registration, Permits and Inspections, is hereby amended by the amendment of **Section 4.14**, Certificate of Occupancy, Subsection (F), so that said subsection shall be and read as follows:

F. Revocation. The Building Official may, in writing, suspend or revoke a Certificate of Occupancy issued under the provisions of this Code whenever the certificate is issued in error, or on the basis of incorrect information supplied, or when it is determined that the building or structure or portion thereof is in violation of any ordinance or regulation or any provision of this Code. Upon suspension or revocation of a Certificate of Occupancy, the Building Official shall have the authority to disconnect, or to order the electricity supply agency to disconnect, all electric service to any premises affected by the revoked or suspended Certificate of Occupancy.

2.

Any person, firm, corporation, agent or employee thereof who violates any of the provisions of this ordinance shall be guilty of a misdemeanor and upon conviction thereof shall be fined an amount not to exceed Two Thousand and No/100 Dollars ($2000) for each offense. Each day that a violation is permitted to exist shall constitute a separate offense.

3.

This ordinance shall be and is hereby declared to be cumulative of all other ordinances of the City of Arlington, and this ordinance shall not operate to repeal or affect any of such other ordinances except insofar as the provisions thereof might be inconsistent or in conflict with the provisions of this ordinance, in which event such conflicting provisions, if any, in such other ordinance or ordinances are hereby repealed.

4.

If any section, subsection, sentence, clause or phrase of this ordinance is for any reason held to be unconstitutional, such holding shall not affect the validity of the remaining portions of this ordinance.

5.

All of the regulations provided in this ordinance are hereby declared to be governmental and for the health, safety and welfare of the general public. Any member of the City Council or any City official or employee charged with the enforcement of this ordinance, acting for the City of Arlington in the discharge of his/her duties, shall not thereby render himself/herself personally liable; and he/she is hereby relieved from all personal liability for any damage that might accrue to persons or property as a result of any act required or permitted in the discharge of his/her said duties.

6.

Any violation of this ordinance can be enjoined by a suit filed in the name of the City of Arlington in a court of competent jurisdiction, and this remedy shall be in addition to any penal provision in this ordinance or in the Code of the City of Arlington.

7.

The caption of this ordinance shall be published in a newspaper of general circulation in the City of Arlington, in compliance with the provisions of Article VII, Section 15, of the City Charter. Further, this ordinance may be published in pamphlet form and shall be admissible in such form in any court, as provided by law.

8.

This ordinance shall become effective ten (10) days after first publication as described above.

PRESENTED AND GIVEN FIRST READING on the **27th** day of **July, 2004,** at a regular meeting of the City Council of the City of Arlington, Texas; and GIVEN SECOND READING, passed and approved on the **10th** day of **August, 2004,** by a vote of **9** ayes and **0** nays at a regular meeting of the City Council of the City of Arlington, Texas.

ORDINANCE NO. 04-086

AN ORDINANCE AMENDING THE **"CONSTRUCTION"** CHAPTER OF THE CODE OF THE CITY OF ARLINGTON, TEXAS, 1987, THROUGH THE AMENDMENT OF **ARTICLE IV**, REGISTRATION, PERMITS AND INSPECTIONS, BY THE AMENDMENT OF **SECTION 4.07**, EXPIRATION OF PERMIT, RELATIVE TO A FEE FOR EXTENSION OF AN UNEXPIRED PERMIT; **SECTION 4.10**, PLAN REVIEW FEES, RELATIVE TO PLAN REVIEW FEES; **SECTION 4.11**, EXPIRATION OF APPLICATION AND PLAN REVIEW, RELATIVE TO EXTENSION OF AN APPLICATION; **SECTION 4.12**, REFUNDS, RELATIVE TO REFUNDS OF BUILDING PERMIT FEES; PROVIDING FOR A FINE OF UP TO $2000 FOR EACH OFFENSE IN VIOLATION OF THE ORDINANCE; PROVIDING THIS ORDINANCE BE CUMULATIVE; PROVIDING FOR SEVERABILITY; PROVIDING FOR GOVERNMENTAL IMMUNITY; PROVIDING FOR INJUNCTIONS; PROVIDING FOR PUBLICATION AND BECOMING EFFECTIVE TEN DAYS AFTER FIRST PUBLICATION

BE IT ORDAINED BY THE CITY COUNCIL OF THE CITY OF ARLINGTON, TEXAS:

1.

That the **"Construction"** Chapter of the Code of the City of Arlington, Texas, 1987, is hereby amended through the amendment of Article IV, Registration, Permits and Inspections, **Section 4.07**, Expiration of Permit, so that hereafter said section shall be and read as follows:

Section 4.07 Expiration of Permit

Every permit issued by the Building Official under the provisions of this Building Code shall expire by limitation of time and become null and void if the building or work authorized by such permit is not commenced within one hundred twenty (120) days from the date of such permit, or if the building or work authorized by such permit is suspended or abandoned for a period of one hundred twenty (120) days at any time after the work is commenced. Before such work can be recommenced, a new permit shall be first obtained.

Any permittee holding an unexpired permit may apply in writing for an extension of the time within which work may commence under that permit when the permittee is unable to commence work within the time required for good and

satisfactory reasons. The Building Official may extend the time for action by the permittee for a period not exceeding one hundred eighty (180) days. The permittee shall pay a fee for the extension of an unexpired permit. No permit shall be extended more than once.

Further, Article IV, **Section 4.10**, Plan Review Fees, is hereby amended so that hereafter said section shall be and read as follows:

Section 4.10 Plan Review Fees

When issuance of a permit depends on review and acceptance of drawings depicting the proposed work, a plan review fee shall be paid at the time of submitting the drawings for review. The plan review fee shall be nonrefundable. The building permit application shall not be received until the plan review fee is paid. The plan review fee shall be set from time to time by resolution of the City Council of the City of Arlington.

Further, Article IV, **Section 4.11**, Expiration of Application and Plan Review, is hereby amended so that hereafter said section shall be and read as follows:

Section 4.11 Expiration of Application and Plan Review

An application for which no permit is issued within one hundred eighty (180) days following the date of application may be voided due to limitation of time, and plans submitted for review may thereafter be returned to the applicant or destroyed by the Building Official. The Building Official may extend the time for action on the application due to circumstances beyond the control of the applicant which have prevented action from being taken. The application may be extended for an additional 180 days upon a request in writing submitted to the Building Official. The application may be extended upon approval by the Building Official and payment of the extension fee. An expired application may only be reactivated by the filing of a new application, including plans and fees. An applicant's written request for voluntary withdrawal of the application shall be deemed to be the same as an expiration of the application.

Further, Article IV, **Section 4.12**, Refunds, is hereby amended so that hereafter said section shall be and read as follows:

Section 4.12 Refunds

There shall be no refund of any plans review fee. A building permit fee may be refunded only upon the following:

A. When a permit has been issued and no part of the work has commenced, a refund of 50% may be authorized. The refund shall be reduced by any applicable service charges;

B. When the permit has been issued through an error on the part of the City of Arlington and it is found that the work applied for cannot be allowed, the refund shall be made in full;

C. Service charges for refunds shall not exceed the original permit fees; and

D. When the refund is requested within 90 days of payment.

2.

Any person, firm, corporation, agent or employee thereof who violates any of the provisions of this ordinance shall be guilty of a misdemeanor and upon conviction thereof shall be fined an amount not to exceed Two Thousand and No/100 Dollars ($2000) for each offense. Each day that a violation is permitted to exist shall constitute a separate offense.

3.

This ordinance shall be and is hereby declared to be cumulative of all other ordinances of the City of Arlington, and this ordinance shall not operate to repeal or affect any of such other ordinances except insofar as the provisions thereof might be inconsistent or in conflict with the provisions of this ordinance, in which event such conflicting provisions, if any, in such other ordinance or ordinances are hereby repealed.

4.

If any section, subsection, sentence, clause or phrase of this ordinance is for any reason held to be unconstitutional, such holding shall not affect the validity of the remaining portions of this ordinance.

5.

All of the regulations provided in this ordinance are hereby declared to be governmental and for the health, safety and welfare of the general public. Any member of the

City Council or any City official or employee charged with the enforcement of this ordinance, acting for the City of Arlington in the discharge of his/her duties, shall not thereby render himself/herself personally liable; and he/she is hereby relieved from all personal liability for any damage that might accrue to persons or property as a result of any act required or permitted in the discharge of his/her said duties.

6.

Any violation of this ordinance can be enjoined by a suit filed in the name of the City of Arlington in a court of competent jurisdiction, and this remedy shall be in addition to any penal provision in this ordinance or in the Code of the City of Arlington.

7.

The caption of this ordinance shall be published in a newspaper of general circulation in the City of Arlington, in compliance with the provisions of Article VII, Section 15, of the City Charter. Further, this ordinance may be published in pamphlet form and shall be admissible in such form in any court, as provided by law.

8.

This ordinance shall become effective ten (10) days after first publication as described above.

PRESENTED AND GIVEN FIRST READING on the **14th** day of **September**, **2004**, at a regular meeting of the City Council of the City of Arlington, Texas; and GIVEN SECOND READING, passed and approved on the **21st** day of **September**, **2004**, by a vote of **7** ayes and **0** nays at a regular meeting of the City Council of the City of **Arlington, Texas**.

ORDINANCE NO. 05-015

AN ORDINANCE AMENDING THE **"CONSTRUCTION"** CHAPTER OF THE CODE OF THE CITY OF ARLINGTON, TEXAS, 1987, THROUGH THE AMENDMENT OF **ARTICLE I**, ENTITLED BUILDING CODE, BY THE AMENDMENT OF **SECTION 1.04**, AMENDMENTS, ADDITIONS AND DELETIONS, SUBSECTION (D), BY THE ADDITION OF A NEW SUBSECTION (61) AND RENUMBERING THE REMAINING SUBSECTIONS; PROVIDING FOR A FINE OF UP TO $2000 FOR EACH OFFENSE IN VIOLATION OF THE ORDINANCE; PROVIDING THIS ORDINANCE BE CUMULATIVE; PROVIDING FOR SEVERABILITY; PROVIDING FOR GOVERNMENTAL IMMUNITY; PROVIDING FOR INJUNCTIONS; PROVIDING FOR PUBLICATION AND BECOMING EFFECTIVE MARCH 4, 2005

BE IT ORDAINED BY THE CITY COUNCIL OF THE CITY OF ARLINGTON, TEXAS:

1.

That the **"Construction"** Chapter of the Code of the City of Arlington, Texas, 1987, is hereby amended through the amendment of **Article I**, Building Code, by the amendment of **Section 1.04**, Amendments, Additions and Deletions, **Subsection (D)**, by the addition of a new subsection (61) and renumbering the remaining subsection so that hereafter said subsection shall be and read as follows:

(61) The amendment of I.R.C. Section P2902.4.3, Lawn irrigation systems, to read as follows:

P2902.4.3 Lawn irrigation systems. The potable water supply to lawn irrigation systems shall be protected against backflow by an atmospheric-type vacuum breaker, a pressure-type vacuum breaker or a reduced pressure principle backflow preventer. A valve shall not be installed downstream from an atmospheric vacuum breaker. All devices shall be installed in accordance with the manufacturer’s installation instructions. All lawn irrigation systems shall be equipped with rain and freeze sensors in accordance with the Water Chapter of the Code of the City of Arlington.

2.

Any person, firm, corporation, agent or employee thereof who violates any of the provisions of this ordinance shall be guilty of a misdemeanor and upon conviction thereof shall be fined an amount not to exceed Two Thousand ($2000) Dollars for each offense. Each day that a violation is permitted to exist shall constitute a separate offense.

3.

This ordinance shall be and is hereby declared to be cumulative of all other ordinances of the City of Arlington, and this ordinance shall not operate to repeal or affect any of such other ordinances except insofar as the provisions thereof might be inconsistent or in conflict with the provisions of this ordinance, in which event such conflicting provisions, if any, in such other ordinance or ordinances are hereby repealed.

4.

If any section, subsection, sentence, clause or phrase of this ordinance is for any reason held to be unconstitutional, such holding shall not affect the validity of the remaining portions of this ordinance.

5.

All of the regulations provided in this ordinance are hereby declared to be governmental and for the health, safety and welfare of the general public. Any member of the City Council or any City official or employee charged with the enforcement of this ordinance, acting for the City of Arlington in the discharge of his/her duties, shall not thereby render himself/herself personally liable; and he/she is hereby relieved from all personal liability for any damage that might accrue to persons or property as a result of any act required or permitted in the discharge of his/her said duties.

6.

Any violation of this ordinance can be enjoined by a suit filed in the name of the City of Arlington in a court of competent jurisdiction, and this remedy shall be in

addition to any penal provision in this ordinance or in the Code of the City of Arlington.

7.

The caption of this ordinance shall be published in a newspaper of general circulation in the City of Arlington, in compliance with the provisions of Article VII, Section 15, of the City Charter. Further, this ordinance may be published in pamphlet form and shall be admissible in such form in any court, as provided by law.

8.

This ordinance shall become effective March 4, 2005.

PRESENTED AND GIVEN FIRST READING on the **8th** day of **February, 2005**, at a regular meeting of the City Council of the City of Arlington, Texas; and GIVEN SECOND READING, passed and approved on the **22nd** day of **February, 2005**, by a vote of **9** ayes and **0** nays at a regular meeting of the City Council of the City of **Arlington, Texas**.

ORDINANCE NO. 05-060

AN ORDINANCE AMENDING THE **"CONSTRUCTION"** CHAPTER OF THE CODE OF THE CITY OF ARLINGTON, TEXAS, 1987, THROUGH THE AMENDMENT OF **ARTICLE IV**, ENTITLED REGISTRATION, PERMITS AND INSPECTIONS, BY THE AMENDMENT OF **SECTION 4.05**, BUILDING PERMITS ISSUED, SUBSECTION (A), BY THE ADDITION OF AN EXCEPTION RELATIVE TO A THIRD PARTY PROVIDER; BY THE AMENDMENT OF **SECTION 4.13**, INSPECTIONS, SUBSECTION (A), BY THE ADDITION OF AN EXCEPTION RELATIVE TO A THIRD PARTY PROVIDER; PROVIDING FOR A FINE OF UP TO $2000 FOR EACH OFFENSE IN VIOLATION OF THE ORDINANCE; PROVIDING THIS ORDINANCE BE CUMULATIVE; PROVIDING FOR SEVERABILITY; PROVIDING FOR GOVERNMENTAL IMMUNITY; PROVIDING FOR INJUNCTIONS; PROVIDING FOR PUBLICATION AND BECOMING EFFECTIVE TEN DAYS AFTER FIRST PUBLICATION

BE IT ORDAINED BY THE CITY COUNCIL OF THE CITY OF ARLINGTON, TEXAS:

1.

That the **"Construction"** Chapter of the Code of the City of Arlington, Texas, 1987, is hereby amended through the amendment of **Article IV**, Registration, Permits and Inspections, by the amendment of **Section 4.05**, Building Permits Issued, **Subsection (A)**, by the addition of the following Exception:

> **EXCEPTION:** The owner of a property may choose to contract with a Third Party Provider that is properly registered with the City for plan review. Plan reviews performed by Third Party Organizations are subject to the terms of the program as authorized by resolution of the City Council of the City of Arlington.

Further, **Article IV, Section 4.13**, Inspections, Subsection (A), is hereby amended by the addition of the following Exception:

EXCEPTION: The owner of a property may choose to contract with a Third Party Provider that is properly registered with the City for inspections. Inspections performed by Third Party Organizations are subject to the terms of the program as authorized by resolution of the City Council of the City of Arlington. A Third Party Provider shall not be authorized to grant a Certificate of Occupancy.

2.

Any person, firm, corporation, agent or employee thereof who violates any of the provisions of this ordinance shall be guilty of a misdemeanor and upon conviction thereof shall be fined an amount not to exceed Two Thousand ($2000) Dollars for each offense. Each day that a violation is permitted to exist shall constitute a separate offense.

3.

This ordinance shall be and is hereby declared to be cumulative of all other ordinances of the City of Arlington, and this ordinance shall not operate to repeal or affect any of such other ordinances except insofar as the provisions thereof might be inconsistent or in conflict with the provisions of this ordinance, in which event such conflicting provisions, if any, in such other ordinance or ordinances are hereby repealed.

4.

If any section, subsection, sentence, clause or phrase of this ordinance is for any reason held to be unconstitutional, such holding shall not affect the validity of the remaining portions of this ordinance.

5.

All of the regulations provided in this ordinance are hereby declared to be governmental and for the health, safety and welfare of the general public. Any member of the City Council or any City official or employee charged with the enforcement of this ordinance, acting for the City of Arlington in the discharge of his/her duties, shall not thereby render himself/herself personally liable; and he/she is hereby relieved from all personal liability for

any damage that might accrue to persons or property as a result of any act required or permitted in the discharge of his/her said duties.

6.

Any violation of this ordinance can be enjoined by a suit filed in the name of the City of Arlington in a court of competent jurisdiction, and this remedy shall be in addition to any penal provision in this ordinance or in the Code of the City of Arlington.

7.

The caption of this ordinance shall be published in a newspaper of general circulation in the City of Arlington, in compliance with the provisions of Article VII, Section 15, of the City Charter. Further, this ordinance may be published in pamphlet form and shall be admissible in such form in any court, as provided by law.

8.

This ordinance shall become effective ten (10) days after first publication as described above.

PRESENTED AND GIVEN FIRST READING on the **5th** day of **July**, **2005**, at a regular meeting of the City Council of the City of Arlington, Texas; and GIVEN SECOND READING, passed and approved on the **26th** day of **July**, **2005**, by a vote of **9** ayes and **0** nays at a regular meeting of the City Council of the City of **Arlington, Texas**.

Ordinance No. 05-068

An ordinance amending the "Construction" Chapter of the Code of the City of Arlington, Texas, 1987, through the amendment of Article I, entitled Building Code, by the amendment of Section 1.02, Adoption of Code, relative to adoption of the 2003 International Building Code, 2003 International Residential Code, and 2003 International Energy Conservation Code; by the amendment of Section 1.04, Amendments, Additions and Deletions, Subsection (C), relative to adopting the 2003 International Building Code; by the amendment of Subsection (D), relative to adopting the 2003 International Residential Code; by the amendment of Subsection (E), relative to adopting the 2003 International Energy Conservation Code; providing for a fine of up to $2,000 for each violation of this ordinance; providing this ordinance be cumulative; providing for severability; providing for governmental immunity; providing for injunctions; providing for publication and becoming effective November 1, 2005

BE IT ORDAINED BY THE CITY COUNCIL OF THE CITY OF ARLINGTON, TEXAS:

1.

That the **"Construction"** Chapter of the Code of the City of Arlington, Texas, 1987, is hereby amended through the amendment of Article I, Building Code, **Section 1.02**, Adoption of Code, so that said section shall read as follows:

Section 1.02 Adoption of Code

The International Building Code, 2003 Edition (hereinafter called "I.B.C."); the International Residential

Code, 2003 Edition (hereinafter called "I.R.C."); and the International Energy Conservation Code, 2003 Edition (hereinafter called "I.E.C.C."); as published by the International Code Council, Inc. are hereby adopted and designated, together with the deletions, amendments and addenda hereinafter contained, as the Building Code of the City of Arlington, the same as though said I.B.C., I.R.C. and I.E.C.C. were copied at length herein. Copies of the I.B.C., I.R.C. and I.E.C.C. and its Appendices shall be kept on file in the Office of the City Secretary.

Further, Article I, **Section 1.04**, Amendments, Additions and Deletions, **Subsection (C)**, is hereby amended so that said subsection reads as follows:

C. The amendment of the following I.B.C. provisions:

(1) The amendment of Section 101.2, entitled Scope., by amending exception #2 and the addition of the following exception #3:

EXCEPTIONS:
2. Existing buildings undergoing repair, alterations or additions, and change of occupancy shall be permitted to comply with the International Existing Building Code with prior approval of the Building Official. Otherwise see chapter 34.

3. Storage buildings not exceeding three hundred twenty (320) square feet in area shall not be subject to the provisions of this Building Code provided:

(a) The building shall not be intended or used for human occupancy;

(b) Any mechanical, electrical or plumbing work shall be installed in full compliance with the appropriate Chapter of the Code of the City of Arlington for such work;

(c) A building on commercial property shall be anchored at each corner: said anchorage shall equal or exceed a concrete pier ten inches (10") in diameter and eighteen inches (18") in depth embedded with a standard one-half inch (½") diameter anchor bolt;

(d) The building shall be not closer than five feet (5') to a property line in residential areas and ten feet (10') to a property line in non-residential areas: subject, however, to any more restrictive setbacks contained in the "Zoning" Chapter of the Code of the City of Arlington: further, storage buildings on commercial property shall be separated from other structures and property lines as specified by I.B.C., Chapter 6;

(e) The building shall be maintained in good repair;

(f) There shall be not more than one (1) such building on any property occupied for other than residential use; and

(g) A permit for such building shall have been obtained from the Building Official.

(2) The amendment of Section 101.4, entitled Referenced Codes., to read as follows:

101.4 Referenced Codes. The other codes listed in Sections 101.4 through 101.4.7 and referenced elsewhere in this code, when specifically adopted, shall be considered part of the requirements of this code to the prescribed extent of each such reference. Whenever amendments have been adopted to the referenced codes and standards, each reference to said code and standard shall be considered to reference the amendments as well. Any reference to NFPA 70 or the ICC Electrical Code shall mean the Electrical Code as adopted.

(3) The amendment of Section 103.1, entitled Creation of Enforcement Agency., to read as follows:

103.1 Creation of enforcement agency. The Building Inspections Division is hereby created and the official in charge thereof shall be known as the Building Official.

(4) The amendment of Section 104.6, entitled Right of Entry., to read as follows:

Where it is necessary to make an inspection to enforce any of the provisions of this Building

Code, or whenever the Building Official or an authorized representative has reasonable cause to believe that there exists in any building or upon any premises any condition or violation which makes such building or premises unsafe, dangerous or hazardous, the Building Official or an authorized representative may enter such building or premises at all reasonable times to inspect the same or to perform any duty imposed upon said Building Official by this Building Code. If such building or premises be occupied, the Building Official shall first present proper credentials and request entry. If such building or premises be unoccupied, the Building Official shall first make a reasonable effort to locate the owner or other person having charge or control of the building or premises and request entry. If such entry is refused, or, if no owner or other person having charge or control of the building or premises can be located, the Building Official or an authorized representative shall have recourse to every remedy provided by law to secure entry.

(5) The addition of Section 104.12, entitled Occupancy Violations., to read as follows:

104.12 Occupancy Violations. Whenever any building, structure, or equipment therein which is regulated by this Building Code is being used contrary to the provisions of said Code, the Building Official or an authorized representative may order that such use be discontinued and/or that the building or structure, or a portion thereof, be vacated by written notice served on any person who is causing such use to be continued. Further, the Building Official or an authorized representative may order the evacuation of any building or premises, or a portion thereof, which constitutes a dangerous building as defined in Article XVII of this Chapter.

Notice to stop use shall be given by personal delivery or by certified mail, return receipt requested, to the person responsible for the continued use. Such person shall discontinue the use within the time prescribed by the Building Official after receipt of such notice and shall not resume the use of the building or premises

until first rendering the same in compliance with this Building Code.

Notice to vacate a dangerous building or premises shall be posted at or upon each exit of the said structure affected thereby, and shall be in substantially the following form:

"DO NOT ENTER
UNSAFE TO OCCUPY

It is a misdemeanor to occupy this building, or to remove or deface this notice.

Arlington Building Official
(by)_____
(date)_____
(compliance due date)_____"

No person shall remain in or enter any building or premises which has been so posted, except that entry may be made to repair, demolish or remove the unsafe condition. Such entry or the destruction, defacing or removal of said notice prior to approval by the Building Official or an authorized representative shall be a violation of this Building Code.

(6) The amendment of Section 106.1, entitled Submittal documents., amending the second sentence to read as follows:

The construction documents shall be prepared by a Texas Licensed Engineer or Architect as required by this ordinance or by State law.

(7) The amendment of Section 202, entitled Definitions., adding a new definition to read as follows:

HIGH-RISE BUILDING is a building having floors used for human occupancy located more than 75 feet (22 860 mm) above the lowest level of fire department vehicle access.

(8) The amendment of Section 202 adding the definition of "SHALL" to read as follows:

SHALL, as it applies to an act or duty to be performed by the Building Official pursuant to any section of this Building Code, is discretionary. Its use in all other applications in this Code shall be mandatory.

(9) The amendment of Section 302.1.1, entitled Incidental use areas., to read as follows:

302.1.1 Incidental use areas. Spaces which are incidental to the main occupancy shall be separated or protected, or both, in accordance with Table 302.1.1. Areas that are incidental to the main occupancy shall be classified in accordance with the main occupancy of the portion of the building in which the incidental use area is located.

Exception: Incidental use areas within and serving a dwelling unit are not required to comply with this section.

(10) The amendment of Section 302.2.1, entitled Assembly areas., to read as follows:

302.2.1 Assembly areas. Accessory assembly areas are not considered separate occupancies if the floor area is equal to or less than 750 square feet (69.7 m2). Assembly areas that are accessory to Group E occupancies are exempt from the separation requirements of Table 302.3.2 and are considered Group E occupancies only for the application of Table 503. Accessory religious educational rooms and religious auditoriums with occupant loads of less than 100 are not considered separate occupancies.

(11) The amendment of Table 302.3.2, entitled Required Separation of Occupancies (Hours)[a], to change the footnote reference in row R-3, R-4, column U, from “d” to “f” and add foot note “f” to read as follows:

f. See Section 406.1.4.

(12) The amendment of Section 303.1, entitled Assembly Group A., to read as follows:

303.1 Assembly Group A. Assembly Group A occupancy includes, among others, the use of a building or structure, or a portion thereof, for the gathering together of persons for purposes such as civic, social or religious functions, recreation, food or drink consumption or awaiting transportation. A room and accessory to another occupancy shall be included as a part of that occupancy. Assembly areas with less than 750 square feet (69.7 m^2) and which are accessory to another occupancy according to Section 302.2.1 are not assembly occupancies. Assembly occupancies which are accessory to Group E in accordance with Section 302.2 are not considered assembly occupancies. Assembly areas which are accessory to Group E occupancies are exempt from the separation requirements of Table 302.3.2 and are considered Group E occupancies only for the application of Table 503. Religious educational rooms and religious auditoriums which are accessory to churches in accordance with Section 302.2 and which have occupant loads of less than 100 shall be classified as A-3.

(13) The amendment of Section 304.1, entitled Business Group B., to read as follows:

304.1 Business Group B. Business Group B occupancy includes, among others, the use of a building or structure, or a portion thereof, for office, professional or service-type transactions, including storage of records and accounts. Business occupancies shall include, but not be limited to, the following:

Airport traffic control towers
Animal hospitals, kennels and pounds
Banks
Barber and beauty shops
Car wash
Civic administration
Clinic—outpatient
Dry cleaning and laundries; pick-up and delivery stations and self-service
Educational occupancies above the 12th grade
Electronic data processing

Laboratories; testing and research
Motor vehicle showrooms
Post offices
Print shops
Professional services (architects, attorneys, dentists, physicians, engineers, etc.)
Radio and television stations
Telephone exchanges
Fire stations
Police stations with detention facilities for 5 or less
Restaurants with no dine-in facilities (take-out or delivery only)

(14) The amendment of Section 403.1, entitled Applicability., to read as follows:

403.1 Applicability. The provisions of this section shall apply to buildings having any occupied floors located more than 75 feet (22 860 mm) above the lowest level of fire department vehicle access.

(15) The amendment of Section 403.1, Exception #3, to read as follows:

3. Buildings with an occupancy in Group A-5 in accordance with Section 303.1, when used for open air seating; however, this exception does not apply to accessory uses including but not limited to sky boxes, restaurants and similarly enclosed areas.

(16) The amendment of Section 403.2, by the deletion of exception #2 in its entirety.

(17) The amendment of Section 404.1.1, entitled Definition., to read as follows:

404.1.1 Definition.

ATRIUM. An opening connecting three or more stories other than enclosed stairways, elevators, hoistways, escalators, plumbing, electrical, air-conditioning or other equipment, which is closed at the top and not defined as a mall. Stories, as used in this definition, do not include balconies within

assembly groups or mezzanines that comply with Section 505.

(18) The amendment of Section 406.1.4, entitled Separation., to read as follows:

4. A separation is not required between a Group R-2 and U carport provided that the carport is entirely open on all sides and that the distance between the two is at least 10 feet (3048 mm).

(19) The amendment of Section 406.6.1, entitled General., adding a second paragraph to read as follows:

This occupancy shall include garages involved in servicing of motor vehicles for items such as lube changes, inspections, windshield repair or replacement, shocks, minor part replacement and other such non-major repair. When the repair garage is only involved in such minor repair, it need not comply with Section 406.6.2.

(20) The amendment of Section 411.4, entitled Automatic sprinklers., to read as follows:

411.4 Automatic sprinklers. An automatic sprinkler system shall be installed in all amusement buildings (as defined in this code). The main water-flow switch shall be electrically supervised. The sprinkler main cutoff valve shall be supervised.

EXCEPTION: An automatic sprinkler system need not be provided for amusement buildings actually operating not more than thirty (30) consecutive days.

(21) The amendment of Section 506.2.2, entitled Open space limits., adding a sentence to read as follows:

In order to be considered as accessible, if not in direct contact with a street or fire lane, a minimum 10 foot wide pathway from the street or approved fire lane must be provided. (See Fire Code Section 503.1.1 for the hose lay measurement pathway requirements.)

(22) The amendment of Table 602, entitled FIRE-RESISTANCE RATING REQUIREMENTS FOR EXTERIOR WALLS BASED ON FIRE SEPARATION DISTANCE[a], to amend footnote b to read as follows:

b. Group R-3 and Group U when used as accessory to Group R-3, as applicable in 101.2 shall be required to have a fire-resistance rating where fire separation distance is 3 feet or more. Group R-2 and Group U carport, as applicable in 406.1.4, exception 4 shall be required to have a fire-resistance rating where fire separation distance is 10 feet or less.

(23) The amendment of Table 602, entitled FIRE-RESISTANCE RATING REQUIREMENTS FOR EXTERIOR WALLS BASED ON FIRE SEPARATION DISTANCE[a]., to insert footnote d. to the heading "GROUP A, B, E, F-2, I, R[bd], S-2, U[d]" to read as follows:

d. For one- and two-family dwellings and apartment buildings, open metal carport structures may be constructed within zero (0) feet of the property line without fire-resistive or opening protection when the location of such is approved as required by other City ordinances.

(24) The amendment of Section 705.11, entitled Ducts and air transfer openings., to amend the Exception to read as follows:

EXCEPTION: For other than hazardous exhaust ducts, penetrations by ducts and air transfer openings of fire walls that are not on a lot line shall be allowed, provided the penetrations comply with Sections 712 and 716. The size and aggregate width of all openings shall not exceed the limitations of Section 705.8.

(25) The amendment of Section 707.2, entitled Shaft enclosure required., by deleting Exception numbers 7.4, 7.5, and 7.6 and changing 7.4 to read as follows:

7.4 Is separated by floor openings serving other floors by construction conforming to required shaft enclosures.

(26) The amendment of Section 716.5.2, entitled Fire barriers., to add exception #4 to read as follows:

4. In the duct penetration of the separation between the private garage and its residence when constructed in accordance with Section 406.1.4, exception #2.

(27) The amendment of Section 902.1, entitled Definitions., "Standpipe, Types of," under "Manual dry" to read as follows:

Manual dry. A dry standpipe system that does not have a permanent water supply attached to the system. Manual dry standpipe systems require water from a fire department pumper to be pumped into the system through the fire department connection in order to supply the system demand. The system must be supervised as specified in Section 905.9.

(28) The addition of Section 903.2.10.4, entitled Self-service storage facility., to read as follows:

903.2.10.4 Self service storage facility. An automatic sprinkler system shall be installed throughout all self-service storage facilities.

EXCEPTION: One story self-service storage facilities, that have no interior corridors, with a one-hour fire barrier wall installed between every storage compartment.

(29) The amendment of Section 903.2.10.3, entitled Buildings over 55 feet in height., to read as follows:

903.2.10.3 Buildings over two stories in height. An automatic sprinkler system shall be installed throughout buildings, other than penthouses in compliance with Section 1509, 3 stories or more in height.

EXCEPTION: Open parking structures in compliance with Section 406.3.

(30) The addition of Section 903.2.10.5, entitled High-Piled Combustible Storage., to read as follows:

903.2.10.5 High-Piled Combustible Storage. For any building with a clear height exceeding 12 feet (4572 mm), see Chapter 23 of the Fire Code to determine if those provisions apply.

(31) The addition of Section 903.2.10.6, entitled Spray Booths and Rooms., to read as follows:

903.2.10.6 Spray Booths and Rooms. New and existing spray booths and spraying rooms shall be protected by an approved automatic fire-extinguishing system.

(32) The amendment of Section 903.3.1.1.1, entitled Exempt locations., to read as follows:

903.3.1.1.1 Exempt locations. When approved by the fire code official, automatic sprinklers shall not be required in the following rooms or areas where such rooms or areas are protected with an approved automatic fire detection system in accordance with Section 907.2 that will respond to visible or invisible particles of combustion. Sprinklers shall not be omitted from any room merely because it is damp, of fire-resistance-rated construction or contains electrical equipment.

1. Any room where the application of water, or flame and water, constitutes a serious life or fire hazard.
2. Any room or space where sprinklers are considered undesirable because of the nature of the contents, when approved by the code official.
3. Generator and transformer rooms, under the direct control of a public utility, separated from the remainder of the building by walls and floor/ceiling or roof/ceiling assemblies having a fire-resistance rating of not less than two hours.

(33) The amendment of Section 903.3.1.2, entitled NFPA 13R sprinkler systems., to read as follows:

903.3.1.2 NFPA 13R sprinkler system. Where allowed in buildings of Group R, up to and including four stories in height, automatic sprinkler systems

shall be hydraulically calculated within the dwelling unit in accordance with NFPA 13R. Sprinkler protection shall be provided throughout, including the means of egress, patios, bathrooms, closets, balconies and attics.

(34) The amendment of Section 903.3.1.3, entitled NFPA 13D sprinkler systems., to read as follows:

903.3.1.3 NFPA 13D sprinkler systems. Non-required automatic sprinkler systems in one and two-family dwellings and manufactured homes may be installed in accordance with NFPA 13D.

(35) The amendment of Section 903.3.5, entitled Water supplies., to add a second paragraph to read as follows:

Water supply as required for such systems shall be provided in conformance with the supply requirements of the respective standards; however, every fire protection system shall be designed with a 10 psi safety factor.

(36) The amendment of Section 903.3.7, entitled Fire department connections., to read as follows:

903.3.7 Fire department connections. The location of fire department connections shall be approved by the Fire Code Official. All fire department connections in the City of Arlington shall be 4″ Storz connections. The permanent Storz adapter shall be constructed of high strength, light weight, corrosion resistant aluminum alloy capable of being securely attached to standpipe/sprinkler outlets designed for fire department Storz connections. The Storz lug connection shall conform to industry standards. The hose sealing surface shall consist of a machined metal seat to eliminate rubber gaskets, coated to protect against long term exposure to the environment. The Storz connection shall connect to the pipe outlet using National Standard Thread. The connection shall be angled downward at a 30° angle. A semi-permanent ¼″ mesh screen shall be provided inside the Storz adapter, constructed of corrosion resistant metal. A 4″ Storz aluminum cap with chain or cable shall be provided for the fire department connection. For each additional

1500 G.P.M. required or fraction thereof an additional 4” Storz connection is required.

(37) The amendment of Section 903.4, entitled Sprinkler system monitoring and alarms., to read as follows:

903.4 Sprinkler system monitoring and alarms. All valves controlling the water supply for automatic sprinkler systems and water-flow switches on all sprinkler systems shall be electrically supervised and monitored by a UL listed Central Station. The fire-pump system shall also be supervised and monitored for "power available," "phase reversal" and "pump running" conditions on distinct circuits.

EXCEPTIONS:

1. Automatic sprinkler systems protecting one- and two-family dwellings.
2. Limited area systems serving fewer than 20 sprinklers.
3. Jockey pump control valves that are sealed or locked in the open position.

Sprinkler and standpipe system water-flow detectors shall be provided for each floor tap to the sprinkler system and shall cause an alarm upon detection of water flow for more than 45 seconds. All control valves in the sprinkler and standpipe systems except for fire department hose connection valves shall be electrically supervised to initiate a supervisory signal at the central station upon tempering.

(38) The amendment of Section 903.4.2, entitled Alarms., to read as follows:

903.4.2 Alarms. Approved audible devices shall be connected to every automatic sprinkler system. Such sprinkler water-flow devices shall be activated by water flow equivalent to the flow of a single sprinkler of the smallest orifice size installed in the system. Alarm devices shall be provided on the exterior of the building in an approved location. An approved audible/visible sprinkler flow alarm to alert the occupants shall be provided in the interior of the building in a normally occupied location. Where a fire alarm system is installed, actuation of the automatic

sprinkler system shall actuate the building fire alarm system.

(39) The amendment of Section 903.4.3, entitled Floor control valves., to read as follows:

903.4.3 Floor control valves. Sprinkler and standpipe system water-flow detectors shall be provided for each floor tap to the sprinkler system and shall cause an alarm upon detection of water flow.

(40) The addition of Section 903.6.2, entitled Spray booths and rooms., to read as follows:

903.6.2 Spray booths and rooms. New and existing spray booths and spray rooms shall be protected by an approved automatic fire extinguishing system in accordance with Section 1504 of the International Fire Code.

(41) The addition of Section 905.2, entitled Installation standards., to read as follows:

905.2 Installation standards. Standpipe systems shall be installed in accordance with this section and NFPA 14. Manual dry standpipe systems shall be supervised with a minimum of 10 psig and a maximum of 40 psig air pressure with a high/low alarm.

(42) The addition of Section 905.3.2, entitled Group A, to delete exceptions #1 and #2.

(43) The amendment of Section 905.4, entitled Location of Class I standpipe hose connections., by revising item #5 to read as follows:

5. Where the roof has a slope less than four units vertical in 12 units horizontal (33.3-percent slope), each standpipe shall be provided with a two-way hose connection located either on the roof or at the highest landing of stairways with stair access to the roof. An additional hose connection shall be provided at the top of the most hydraulically remote standpipe for testing purposes.

(44) The amendment of Section 905.9, entitled Valve supervision., to add a second paragraph after the exceptions to read as follows:

Sprinkler and standpipe system water-flow detectors shall be provided for each floor tap to the sprinkler system and shall cause an alarm upon detection of water flow. All control valves in the sprinkler and standpipe systems except for fire department hose connection valves shall be electrically supervised to initiate a supervisory signal at the central station upon tampering.

(45) The addition of Sections 907.1.2.1, 907.1.2.2 and 907.1.2.3 to read as follows:

907.1.2.1 Fire alarm control panel. The fire alarm control panel shall be installed in an approved location adjacent to the main entrance to the building unless otherwise approved by the Fire Code Official.

907.1.2.2 Key/Codes. Fire alarm control panel functions such as silence and reset shall be operable without the use of a key or code. The panel cover may be locked, but the function keys cannot require a key or code.

907.1.2.3 Alarm verification. Alarm verification shall be provided for smoke detectors. Alarm verification shall be provided at the fire alarm control panel when more than thirty (30) detectors are installed.

EXCEPTION: Alarm verification is not required for single station type smoke detectors.

(46) The addition of Section 907.1.3, entitled Design Standards., to read as follows:

907.1.3 Design Standards. Fire alarm systems, automatic fire detectors, emergency voice alarm communication systems and notification devices shall be designed, installed and maintained in accordance with NFPA 72 and local amendments. All alarm systems new or replacement serving 50 or more alarm actuating devices shall be addressable fire detection systems. Alarm systems serving more than 75 smoke detectors or more than 200

total alarm activating devices shall be analog intelligent addressable fire detection systems.

EXCEPTION: Existing systems need not comply unless the total building remodel or expansion initiated after January 1, 1998 exceeds 30% of the building. When cumulative building remodel or expansion exceeds 50% of the building must comply within 18 months of permit application.

(47) The amendment of Section 907.2.3, entitled Group E., to read as follows:

907.2.3 Group E. A manual fire alarm system shall be installed in Group E educational occupancies. When automatic sprinkler systems or smoke detectors are installed, such systems or detectors shall be connected to the building fire alarm system. An approved smoke detection system shall be installed in Group E day care occupancies. Unless separated by a minimum of 100' open space, all buildings, whether portable buildings or the main building, will be considered one building for alarm occupant load consideration and interconnection of alarm systems.

(48) The amendment of Section 907.2.3, entitled Group E., Exception #1, adding Exceptions 1.1 and 1.2 to read as follows:

EXCEPTIONS:

1. Group E educational and day care occupancies with an occupant load of less than 50 when provided with an approved automatic sprinkler system.

1.1 Portable/Temporary buildings in Group E Educational occupancies with manual fire alarm systems are not required to be connected to the alarm system in the main building.

1.2 Residential in-home day care with not more than 12 children may use interconnected single station detectors in all habitable rooms. (For care of more than five children 2½ or less years of age, see Section 907.2.6.)

(49) The addition of Section 907.2.8.4, entitled Carbon Monoxide Detectors., to read as follows:

907.2.8.4 Carbon Monoxide Detectors. In new and existing hotels and motels, carbon monoxide detectors shall be provided in all locations where there is gas-fired equipment, such as, but not limited to, dryers, HVAC, or hot water heaters. When the building is equipped with a fire alarm system, the carbon monoxide detectors shall be connected in such a manner as to cause the Fire Alarm system to sound an alarm when the carbon monoxide goes into alarm.

(50) The addition of Section 907.2.9.1, entitled Manual fire alarm boxes., to read as follows:

907.2.9.1 Manual Fire Alarm Boxes. Manual fire alarm boxes are prohibited in Group R-2 apartment houses less than four (4) stories in height.

(51) The addition of Section 907.2.10.1.3, entitled Group R-2., to read as follows:

907.2.10.1.3 Group R-2. A fire alarm system shall be installed to existing Group R-2 occupancies more than three stories in height or with more than 16 dwelling units or sleeping units.

Exceptions:
1. Where each living unit is separated from other continuous living units by fire barriers having a fire-resistance rating or not less than 0.75 hour, and where each living unit has either its own independent exit or its own independent stairway or ramp discharging at grade.
2. A separate fire alarm system is not required in buildings that are equipped throughout with an approved supervised automatic sprinkler system installed in accordance with Section 903.3.1.1 or 903.3.1.2 and having a local alarm to notify all occupants.
3. A fire alarm system is not required in buildings that do not have interior corridors serving dwelling units and are protected by an approved automatic sprinkler system installed in accordance with Sections 903.3.1.1 or 903.3.1.2, provided that dwelling units either have a means of egress door opening directly to an exterior

exit access that leads directly to the exits or are served by open-ended corridors designed in accordance with Section 1022.6, Exception 4.
4. Existing systems need not comply unless the total system remodel or expansion initiated after November 2005 exceeds 30% of the building. When cumulative building remodel or expansion exceeds 50%, the building must comply within 18 months of permit application.

(52) The amendment of Section 907.2.12, entitled High-rise buildings., Exception #3, to read as follows:

3. Buildings with an occupancy in Group A-5 in accordance with Section 303.1 of the International Building Code, when used for open air seating; however, this exception does not apply to accessory uses, including but not limited to sky boxes, restaurants and similarly enclosed areas.

(53) The amendment of Section 907.3, entitled Manual fire alarm boxes., to add a second paragraph to read as follows:

Manual alarm actuating devices shall be an approved double action type.

(54) The addition of Section 907.5.1 entitled Alarms., to read as follows:

907.5.1 Alarms. All fire alarm systems shall be installed in such a manner that the failure of any single alarm-actuating or alarm-indicating device will not interfere with the normal operation of any other such devices. All systems shall be Class "A" wired with a minimum of six feet separation between supply and return loops. IDC – Class "A" style – D – SLC Class "A" Style 6 – notification Class "B" Style Y.

(55) The amendment of 907.8, entitled Zones., to read as follows:

907.8 Zones. Each floor shall be zoned separately and a zone shall not exceed 22,500 square feet (1860 m^2). The length of any zone shall not exceed 300 feet (91 440 mm) in any direction. A maximum of one (1) water flow switch or three (3) tamper switches, five (5) pull stations or ten

(10) smoke or heat detectors may be interconnected to be upon a single zone of a fire alarm control panel.

Exceptions:
1. Automatic sprinkler system zones shall not exceed the area permitted by NFPA 13.
2. Addressable systems.

(56) The amendment of 907.8.2, entitled High-rise buildings., to read as follows:

907.8.2 High-rise buildings. In buildings that have floors located more than 75 feet (16 764 mm) above the lowest level of fire department vehicle access, a separate zone by floor shall be provided for all of the following types of alarm-initiating devices where provided:

1. Smoke detectors.
2. Sprinkler water-flow.
3. Manual fire alarm boxes.
4. Other approved types of automatic fire detection devices or suppression systems.

Exception:
Addressable systems

(57) The amendment of Section 907.14, entitled Monitoring., and the addition of Section 907.14.1, entitled Local alarm system., to read as follows:

907.14 Monitoring. Where required by this chapter, an approved UL listed central station in accordance with NFPA 72 shall monitor fire alarm systems.

Exception:
Supervisory service is not required for automatic sprinkler systems in one- and two-family dwellings.

907.14.1 Local alarm system. When an automatic fire alarm system is not monitored by an approved central station alarm company, an external weatherproof, audible/visual alarm sounding device shall be provided in an approved location with an approved sign, with a minimum of four-inch (4”)

letters, reading “WHEN ALARM SOUNDS, CALL FIRE DEPARTMENT” adjacent to the alarm-sounding device.

An approved permanent sign reading “LOCAL ALARM ONLY – CALL FIRE DEPARTMENT” shall be provided on or adjacent to the fire alarm control panel and all manual fire alarm pull stations.

(58) The amendment of Section 907.8.2, entitled High-rise buildings., by adding an exception to read as follows:

EXCEPTION: Addressable systems.

(59) The amendment of Section 1004.2, entitled Increased Occupant Load., to read as follows:

1004.2 Increased occupant load. When approved by the building official, the occupant load in any building or portion thereof may be increased from that number established for the occupancies in Table 1004.1.2 provided that all other requirements of the code are also met based on such modified number and the occupant load shall not exceed one occupant per 5 square feet (0.47 m^2) of occupiable floor space. Adequate changes in available parking space shall also match any increases in occupant load. Where required by the building official, an approved aisle, seating or fixed equipment diagram substantiating any increase in occupant load shall be submitted. Where required by the building official, such diagram shall be posted.

(60) The amendment of Section 1008.1.3.4, entitled Access-controlled egress doors., to read as follows:

1008.1.3.4 Access-controlled egress doors. The entrance doors in a means of egress in buildings with an occupancy in Group A, B, E, M, R-1 or R-2 and entrance doors to tenant spaces in occupancies in Groups A, B, E, M, R-1, and R-2 are permitted to be equipped with an approved entrance and egress access control system which shall be installed in accordance with the following criteria:

1. Egress doors shall be readily openable from the egress side without the use of a key, card or special knowledge of effort.
2. Push buttons are not allowed for egress purposes.
3. All devices utilized for exiting shall be listed for the purpose.
4. Activation of the building fire alarm system and/or sprinkler system, if provided, shall automatically unlock the doors, and the doors shall remain unlocked until the fire alarm system has been reset.
5. A Knox box may be required by the Fire Code Official for Fire Department access.

(61) The amendment of Section 1008.1.8.6, entitled Delayed egress locks., to revise and add a sentence after Items 1-6 to read as follows:

1008.1.8.6 Delayed egress locks. Approved, listed, delayed egress locks shall be permitted to be installed on doors serving any occupancy except Group A, E and H occupancies in buildings which are equipped throughout with an automatic sprinkler system in accordance with Section 903.3.1.1 and an approved automatic smoke or heat detection system installed in accordance with Section 907, provided that the doors unlock in accordance with Items 1 through 6 below. A building occupant shall not be required to pass through more than one door equipped with a delayed egress lock before entering an exit.

(Items 1-6 remain unchanged.)

A permit from the Fire Department is required prior to the installation of any delayed egress locks or other special locking systems.

(62) The amendment of Section 1008.1.8.7, entitled Stairway Doors., by adding Exception #4, to read as follows:

4. In stairways serving more than four stories, doors can be locked from stairway side, if lock is connected to fire alarm system and key to the door is provided in a Knox Box. Activation of fire alarm system must release locks on all stairway doors.

(63) The amendment of Section 1016.1, entitled Construction., to add Exception #5 to read as follows:

5. In Group B office buildings, corridor walls and ceilings need not be of fire-resistive construction within office spaces of a single tenant when the space is equipped with an approved automatic smoke-detection system within the corridor. The actuation of any detector shall activate alarms audible in all areas served by the corridor. The smoke-detection system shall be connected to the building's fire alarm system where such a system is provided.

(64) The amendment of Section 1019.1.8, entitled Smokeproof enclosures., to read as follows:

1019.1.8 Smokeproof enclosures. In buildings required to comply with Section 403 and 405, each of the exits of a building that serves stories where any floor surface is located more than 75 feet (22,860 mm) above the lowest level of fire department vehicle access or more than 30 feet (9,144 mm) below the level of exit discharge serving such floor levels shall be a smokeproof enclosure or pressurized stairway in accordance with Section 909.20.

(65) The amendment of Section 1101.2, entitled Design., to add an Exception to read as follows:

EXCEPTION. Buildings regulated under State Law and built in accordance with State certified plans, including any variances or waivers granted by the State, shall be deemed to be in compliance with the requirements of this Chapter.

(66) The amendment of Section 1109.2.1, entitled Unisex toilet and bathing rooms., to read as follows:

1109.2.1 Unisex toilet and bathing rooms. In assembly and mercantile occupancies, an accessible unisex toilet room shall be provided where an aggregate of six or more male or female water closets are provided. In buildings of mixed occupancy, only those water closets required for

the assembly or mercantile occupancy shall be used to determine the unisex toilet room requirement. In recreational facilities where separate-sex bathing rooms are provided, an accessible unisex bathing room shall be provided. Fixtures located within unisex toilet and bathing rooms shall be included in determining the number of fixtures provided in an occupancy.

(67) The amendment of Section 1210.2, entitled Walls., exception #2, to read as follows:

2. Toilet rooms that are not accessible to the public and which have not more than one water closet; provided that walls around urinals comply with the minimum surrounding material specified by the Plumbing Code.

(68) The amendment of Section 1202.1, entitled General, to add the Exception to read as follows:

EXCEPTION: Private laundry rooms in Group R, Division 2 and inside individual dwelling units of Group R, Division 3 and 4 Occupancies.

(69) The amendment of Section 1403.3, entitled Vapor retarder., to delete the exceptions and revise to read as follows:

1403.3 Vapor retarder. In all framed walls, floors and roof/ceilings comprising elements of the building thermal envelope, a vapor retarder, when installed, shall be installed in a manner so as to not trap moisture. Vapor retarders shall be tested in accordance with ASTM E 96.

(70) The amendment of Table 1405.2, entitled Minimum Thickness of Weather Coverings., by adding footnote "d" wood shingles to read as follows:

d: Wood shingles and shakes shall not be used as an exterior wall covering within seven feet (7') of grade for Group R-1 and R-2 Occupancies.

All wood shingles or shakes to be used as an exterior wall covering for Group R-1 and R-2 Occupancies shall be fire-retardant shakes and shingles. Fire-retardant shakes and shingles are wood shakes and shingles complying with ASTM D

2898 impregnated by the full-cell vacuum-pressure process with fire retardant chemicals, and have been qualified by ASTM E 108 or U.L. 790 for use on Class A, B or C roofs. Each bundle of treated wood shakes and shingles shall bear labels identifying their roof covering classification and approved quality control agency.

(71) The amendment of Table 1505.1, entitled Minimum Roof Covering Classification for Types of Construction., by replacing footnote b and c with the following:

b. All individual replacement shingles or shakes shall be in compliance with the rating required by this table.
c. Non-classified roof coverings shall be permitted on buildings of U occupancies having not more than 120 sq. ft. of projected roof area. When exceeding 120 sq. ft. of projected roof area, buildings of U occupancies may use non-rated non-combustible roof coverings.

(72) The amendment of Section 1505.7, entitled Special purpose roofs., by deleting it in its entirety.

(73) The amendment of Section 1510.3, entitled Recovering vs. replacement., by the addition of subparagraph #4, to read as follows:

4. **Asphalt shingles.** Not more than one overlay of asphalt shingles shall be applied over an existing asphalt or wood shingle roof.

(74) The amendment of Section 1610, entitled Soil Lateral Load., by the addition of the following paragraph and "EXCEPTION":

Retaining walls exceeding three feet (3') in height shall be constructed of materials other than wood, including treated wood products, and shall be designed by a professional engineer. A wall built in tiers shall be considered a single wall in height when the base of the upper tier is set back from the base of the lower tier less than one and one-half (1½) times the height of the wall section below.

EXCEPTION: Retaining walls erected on properties used for Group R-3 occupancies may be constructed up to six feet (6') in height of any approved materials. A professional engineer shall design these retaining walls when exceeding a height of four feet (4'). Unless specifically approved by the Building Official, such walls shall not support a building, driveway or other permanent construction closer to the wall than one and one-half (1½) times the full height of the wall.

(75) The amendment of Section 1704.1, entitled General., to revise the first sentence to read as follows:

All construction or work for which a permit is required shall be subject to inspection by the Building Official. The Building Official may require certain types of construction to have continuous inspection by special inspectors as specified in Chapter 17 of this code.

(76) The addition of Section 2308.2.3, entitled Application to engineered design., to read as follows:

2308.2.3 Application to engineered design. When accepted by the code official, any portion of this section is permitted to apply to buildings that are otherwise outside the limitations of this section provided that:

1. The resulting design will comply with the requirements specified in Chapter 16;
2. The load limitations of various elements of this section are not exceeded; and
3. The portions of this section which apply are identified by an engineer in the construction documents.

(77) The amendment of Chapter 29, entitled Plumbing Systems., to read as follows:

SECTION 2901
GENERAL

2901.1 Scope. The Provisions of this chapter and the *International Plumbing Code* shall govern the erection, installation, alteration, repairs,

relocation, replacement, addition to, use or maintenance of plumbing equipment and systems. Plumbing systems and equipment shall be constructed, installed and maintained in accordance with the *International Plumbing Code.*

SECTION 2902
MINIMUM PLUMBING FACILITIES

2902.1 Minimum number of fixtures. Plumbing fixtures, including provisions for accessibility in accordance with Chapter 11, shall be provided for the type of occupancy and in the minimum number shown in Table 2902.1. Types of occupancies not shown in Table 2902.1 shall be considered individually by the Building Official. The number of occupants shall be determined by the occupant load factors shown in Table 2902.1 unless sufficient data is approved by the building official for different occupant load factors. Occupancy classification shall be determined in accordance with Chapter 3. The number of fixtures are the minimum required as shown in Table 2902.1 and are assumed to be based on 50 percent male and 50 percent female, unless statistical data approved by the building official indicates a different distribution of the sexes.

Exception: Plumbing fixtures, including provisions for accessibility in accordance with Chapter 11, for facilities where the public congregates shall be provided in accordance with Section 2902.5.

2902.2 Separate Facilities. Where plumbing fixtures are required, separate facilities shall be provided for each sex.

Exceptions:

1. Separate facilities shall not be required for private facilities.
2. Separate facilities for employees shall not be required in occupancies in which 15 or less people are employed.

3. Separate facilities shall not be required in structures or tenant spaces with a total occupant load, including both employees and customers, of 15 or less.

2902.3 Access to and location of employee facilities. Access to employees' toilet facilities, in other than mercantile and assembly occupancies, shall be from within the employees regular working areas. Access to employees' toilet facilities in mercantile and assembly occupancies may be in combination with public facilities as required in this section.

Facilities that are required for employees in storage structures or kiosks, and are located in adjacent structures under the same ownership, lease or control, shall be a maximum of 500 feet (152 m) from the employees' regular working area.

The required employee toilet facilities shall be located not more than one story above or below the employee's regular working area and the path of travel to such facilities shall not exceed a distance of 500 feet (152 m).

2902.4 Public facilities. Customers, patrons and visitors shall be provided with public toilet facilities in structures and tenant spaces intended for public utilization when the total occupant load is 16 or more; or, for all A-2 occupancies. Public utilization is assumed when customers, patrons and visitors utilize a structure for the purpose of dining, shopping, conducting business on more than a simple casual basis. A simple casual basis is assumed when the average customer, patron and visitor is in and out of a structure or tenant space in a very short duration of time; such as but not limited to, picking up/dropping off dry cleaning or laundry, food take-out only, cash checking and/or bill paying facilities, and similar facilities. Public facilities shall be located not more than one story above or below the space required to be provided with public toilet facilities and the

path of travel to such facilities shall not exceed a distance of 500 feet (152 m).

Required facilities shall be free of charge and designated by legible signs for each sex. Where pay facilities are installed, such facilities shall be in excess of the required minimum facilities.

2902.5 Facilities where the public congregates. Plumbing fixtures, including provisions for accessibility in accordance with Chapter 11, for facilities where the public congregates shall be provided in accordance with this section. For the purpose of this section, the term “facilities where the public congregates” shall include sports and entertainment arenas, stadiums, community and convention halls, specialty event centers and amusement facilities. The term “facilities where the public congregates” does not include hotels, churches, restaurants, bowling centers, public or private elementary or secondary schools, or historic buildings.

2902.5.1 When the use of restrooms is designated by gender, toilet facilities shall be provided for each sex at a ratio of not less than 2:1 women’s to men’s or according to Table 2902.2.

2902.5.2 This section shall apply to new structures and to existing structures when the costs of structural alterations, repairs or improvements exceed 50% of the worth of the facility, as determined by the Tarrant Appraisal District.

2902.6 Additional fixtures for food preparation facilities. In addition to the fixtures required by this chapter, all food service facilities shall also be provided with additional fixtures as outlined in this section.

2902.6.1 Hand washing lavatory. At least one hand washing lavatory shall be provided for use by employees that is accessible from food

preparation, food dispensing and warewashing areas. The City of Arlington Neighborhood Services Department may require additional hand washing lavatories based on convenience of use by employees.

2902.6.2 Service sink. In new or remodeled food service establishments, at least one service sink or one floor sink shall be provided so that it is conveniently located for the cleaning of mops or similar wet floor cleaning tools and for the disposal of mop water and similar liquid waste. The City of Arlington Neighborhood Services Department shall be the final authority for the approval of the location.

Table 2902.1 - MINIMUM PLUMBING FIXTURES [1,2,3]

TYPE OF BUILDING OR OCCUPANCY[4]	WATER CLOSETS[5] (fixtures per person) MALE	WATER CLOSETS[5] (fixtures per person) FEMALE	LAVATORIES[6] (fixtures per person) MALE	LAVATORIES[6] (fixtures per person) FEMALE	BATHTUB OR SHOWER (fixtures per person)
For the occupancies listed below, use 30 square feet (2.78 m^2) per occupant for the minimum number of plumbing fixtures.					
Group A Conference rooms, dining rooms, drinking establishments, exhibit rooms, gymnasiums, lounges, stages restaurants and gamerooms	1:1-25 2:26-75 3:76-125 4:126-200 5:201-300 6:301-400 Over 400, add one fixture for each additional 200 males or 150 females.	1:1-25 2:26-75 3:76-125 4:126-200 5:201-300 6:301-400	One for each water closet up to four; then one for each two additional water closets.		No requirements
For the assembly occupancies listed below, use the number of fixed seating or, where no fixed seating is provided, use 15 square feet (1.39 m^2) per occupant for the minimum number of plumbing fixtures.					
Assembly places - Auditoriums, dance floors, lodge rooms, and casinos	1:1-50 2:51-100 3:101-150 4:151-300 Over 300 males, add one fixture for each additional 200, and over 400 females add one for each 125.	1:1-50 2:51-100 3:101-150 4:151-300	1:1-200 2:201-400 3:401-750 Over 750, add one fixture for each additional 500 persons.	1:1-200 2:201-400 3:401-750	No requirements
For the assembly occupancies listed below, use the number fixed seating or, where no fixed seating is provided, use 30 square feet (2.29 m^2) per occupant for the minimum number of plumbing fixtures.					
Worship places, Principal assembly area	1:150	1:75	1:2 water closets		
Worship places, Educational and activity unit	1:125	1:75	1:2 water closets		No requirements
For the occupancies listed below, use 200 square feet (2.29 m^2) per occupant for the minimum number of plumbing fixtures.					
Group B Offices or public buildings	1:1-15 2:16-35 3:36-55 Over 55, add one for each 50 persons.	1:1-15 2:16-35 3:36-55	1:2 water closets		No requirements

(Continued)

TYPE OF BUILDING OR OCCUPANCY[4]	WATER CLOSETS[5] (fixtures per person) MALE	FEMALE	LAVATORIES[6] (fixtures per person) MALE	FEMALE	BATHTUB OR SHOWER (fixtures per person)
For the occupancies listed below, use 50 square feet (4.65 m^2) per occupant for the minimum number of plumbing fixtures.					
Group E Schools - for staff use All schools	1:1-15 2:16-35 3:36-55 Over 55, add one fixture for each additional 40 persons.	1:1-15 2:16-35 3:36-55	1:40	1:40	
Schools - for student use Day care	1:1-20 2:21-50 Over 50, add one fixture for each additional 50 persons.	1:1-20 2:21-50	1:1-25 2:26-50 Over 50, add one fixture for each additional 50 persons	1:1-25 2:26-50	No requirements
Elementary Secondary	1:30 1:40	1:30 1:40	1:35 1:40	1:35 1:40	
For the occupancies listed below, use 50 square feet (4.65 m^2) per occupant for the minimum number of plumbing fixtures.					
Educational Facilities other than Group E (colleges, universities, adult centers, etc.)	1:40	1:30	1:40	1:40	No requirements
For the occupancies listed below, use 2,000 square feet (185 m^2) per occupant for the minimum number of plumbing fixtures					
Group F Workshops, foundries and similar establishments, and Group H Occupancies	1:1-10 2:11-25 3:26-50 4:51-75 5:76-100 Over 100, add one fixture for each additional 300 persons	1:1-10 2:11-25 3:26-50 4:51-75 5:76-100	1:2 water closets		1 shower for each 15 persons w/ possibility of being exposed to excessive heat or to skin contamination with irritating materials
For the occupancies listed below, use the designated application and 200 square feet (18.58 m^2) per occupant of the general use area for the minimum number of plumbing fixtures.					
Group I Hospital waiting rooms Hospital general use areas	1:room (usable by either sex) 1:1-15 2:16-35 3:36-55 Over 55, add one fixture for each additional 40 persons	1:1-15 2:16-35 3:36-55	1 per room 1:2 water closets		No requirements

(Continued)

TYPE OF BUILDING OR OCCUPANCY[4]	WATER CLOSETS[5] (fixtures per person) MALE	FEMALE	LAVATORIES[6] (fixtures per person) MALE	FEMALE	BATHTUB OR SHOWER (fixtures per person)
Hospitals Patient room Ward Room	 1: Per room 1: eight patients		 1: Per room 1: 10 patients		 1: Per room 1: 20 patients
Jails and reformatories Cell Exercise room	 1 per cell 1 per exercise room		 1 per cell 1 per exercise room		 No requirements
Other institutions (on each occupied floor)	1:25	1:25	1:10	1:10	1:8
For the occupancies listed below, use 200 square feet (18.58 m^2) per occupant for the minimum number of plumbing fixtures.					
Group M Retail or wholesale stores	1:1-50 2:51-100 3:101-400 Over 400, add one fixture for each additional 500 males and one for each 150 females.	1:1-50 2:51-100 3:101-200 4:201-300 5:301-400	1: 2 water closets		No requirements
For Group R Occupancies, dwelling units and hotel guest rooms, use the chart. For congregate residences, use 200 square feet (18.58 m^2) for Group R, Division 1 Occupancies and 300 square feet (27087 m^2)					
Group R Dwelling units Hotel guest rooms	 1: dwelling unit 1: guest room		 1: dwelling unit 1: guest room		 1: dwelling unit 1: guest room
Congregate residences	1:10 Add one fixture for each additional 25 males and one for each additional 20 females.	1:8	1:12 Over 12, add one fixture for each additional 20 males and one for each additional 15 females	1:12	1:8 For females, add one bathtub per 30. Over 150, add one per 20.
For the occupancies listed below, use 5,000 square feet (464.5 m^2) per occupant for the minimum number of plumbing fixtures.					
Group S Warehouses	1:1-10 2:11-25 3:26-50 4:51-75 5:76-100 Over 100, add one for each 300 males and females	1:1-10 2:11-25 3:26-50 4:51-75 5:76-100	1: 40 occupants of each sex		1 shower for each 15 persons w/ possibility of being exposed to excessive heat or to skin contamination with poisonous, infectious or irritating materials

[1] The figures shown are based on one fixture being the minimum required for the number of persons indicated or any fraction thereof.

[2] Drinking fountains shall not be installed in toilet rooms.

[3] When the design occupant load is less than 16 persons, a facility usable by either sex may be approved by the Building Official.

[4] Any category not mentioned specifically or about which there are any questions shall be classified by the Building Official and included in the category which it most nearly resembles, based on the expected use of the plumbing facilities.

[5] Where urinals are provided, one water closet less than the number specified may be provided for each urinal installed, except the number of water closets in such cases shall be reduced to less than one half of the minimum specified.

[6] Twenty-four inches (610 mm) of wash sink or 18 inches (457 mm) of a circular basis, when provided with water outlets for each space, shall be considered equivalent to one lavatory.
[7] Except for dining establishments, all other occupancies with an occupant load over 30 shall have one drinking fountain for each 150 total occupants.

TABLE 2902.2 MINIMUM PLUMBING FACILITIES FOR FACILITIES WHERE THE PUBLIC CONGREGATES [1, 2]

TYPE OF BUILDING OR OCCUPANCY	WATER CLOSETS (fixtures per person)		LAVATORIES (fixtures per person)		URINALS (fixtures per person)
	MALE	FEMALE	MALE	FEMALE	
For the assembly occupancies listed below, use the number of fixed seating or, where no fixed seating is provided, use 15 square feet (1.39 m^2) per occupant for the minimum number of plumbing fixtures.					
Facilities Where the Public Congregates					
Sports and entertainment arenas	1:1-100	3:1-50	1:1-200	1:1-200	1:1-100
Stadiums	2:101-200	4:51-100	2:201-400	2:201-400	2:101-200
Community and convention halls	3:201-400	8:101-200	3:401-750	3:401-750	3:201-400
Specialty event centers		11:201-400			4:401-600
Amusement facilities	Over 400, add 1 fixture for each additional 500 males; over 400 add 2 fixtures for each 300 females		Over 750, add one fixture for each additional 500 persons.		Over 600, add 1 fixture for each additional 500 males

[1] The figures shown are based on one fixture being the minimum required for the number of persons indicated or any fraction thereof.
[2] Drinking fountains shall not be installed in toilet rooms.
[3] Any category not mentioned specifically or about which there are any questions shall be classified by the Building Official and included in the category which it most nearly resembles, based on the expected use of the plumbing facilities.
[4] Twenty-four inches (610 mm) of wash sink or 18 inches (457 mm) of a circular basis, when provided with water outlets for each space, shall be considered equivalent to one lavatory.
[5] Except for dining establishments, all other occupancies with an occupant load over 30 shall have one drinking fountain for each 150 total occupants.

(78) The amendment of Section 3109.1, entitled General., to read as follows:

The provisions of this section shall apply to the design and construction of barriers for all swimming pools.

EXCEPTION: The following uses are regulated by State statute and are not subject to this section:

1. Group R-2 apartments.

2. A pool owned, controlled, or maintained by the owner of a multi-unit rental complex or by property owners association.

(79) The amendment of Section 3109.2 entitled Definitions, to read as follows:

3109.2 Definition. The following words and terms shall, for the purposes of this section and as used elsewhere in this code, have the meaning shown herein.

MULTI-UNIT RENTAL COMPLEX is two or more dwelling units in one or more buildings that are under common ownership, managed by the same owner, managing agent, or management company, and located on the same lot or tract of land or adjacent lots or tracts of land. The term includes a condominium project. The term does not include:

(A) A facility primarily renting rooms to overnight guests; or

(B) A single-family home or adjacent single-family homes that are not part of a condominium project.

POOL DECK is a flat walking surface consisting of wood, stone, brick, concrete or other similar material located within five feet (5') of the waters edge of a swimming pool or spa.

PROPERTY OWNERS ASSOCIATION is an association of property owners for a residential subdivision, condominium, cooperative, townhouse project, or other project involving residential dwellings.

SELF-CLOSING GATE is a gate, which closes or shuts automatically, without the aid of human, electrical, solar or battery power after being opened.

SELF-CLOSING AND SELF-LATCHING DEVICE is a device that causes a gate to automatically close and latch without human, electrical, solar or battery power.

SWIMMING POOLS. Any structure intended for swimming, recreational bathing or wading that contains water over 24 inches (610 mm) deep. This includes in-ground, aboveground and on-ground pools; hot tubs; spas and fixed-in-place wading pools.

(80) The amendment of Section 3109.4.1.3, entitled Closely Spaced Horizontal Members., by the addition of an exception to number 1 to read as follows:

EXCEPTION: When horizontal members are part of a fence that is at least 6 feet (1830 mm) in height, the horizontal members need not be on the pool side of the barrier.

(81) The amendment of Section 3109.4.1.7, entitled Gates., by the addition of an Exception to number 4 to read as follows:

EXCEPTION: Driveway access gates across a paved or improved surface intended for regular vehicle access shall not be located in a swimming pool barrier.

(82) The amendment of Section 3109.5, entitled Entrapment avoidance., to read as follows:

3109.5 Entrapment avoidance. All swimming pools shall be provided with a means of entrapment avoidance that complies with Title 25 of the Texas Administrative Code, Part 1, Chapter 265, Subchapter L, Sections 181 through 107 as adopted and amended in Article VII, Public Swimming Pools, of the Health and Safety Chapter of the Code of the City of Arlington.

(83) The amendment of Section 3304.1, entitled Excavation and Fill., by the addition of the following five (5) paragraphs and one (1) "EXCEPTION" after the first paragraph:

Should trench excavations exceed five feet (5') in depth, bid documents and construction contracts must include provisions for specifications for adequate safety systems that meet Occupational Safety and Health Administration (OSHA) standards. Further, these plans and specifications shall include a pay item for these safety systems, which is to be a part of the contract. In addition, a safety program outline shall be provided to the property owner by the contractor and the contractor's safety record shall be reviewed as a condition of the contract award.

Prior to performing such excavations, the contractor must submit plans and specifications for trench shoring to the Building Official for review. The plans shall be stamped, signed and dated by a registered professional engineer attesting that these plans meet OSHA requirements in accordance with state law.

The contract requirements of this Section shall not apply to contracts entered into with persons subject to the safety standards adopted under V.A.C.S., Article 6053-1, entitled Transportation of Gas and Gas Pipeline Facilities.

Acceptable fill shall only be comprised of one or more of the following materials: Dirt, concrete or asphalt. No person shall cause, allow, suffer or permit fill containing any other material to be used for any building, structure, foundation or retaining structure.

No person shall cause, allow, suffer or permit fill to be placed or stored, upon any undeveloped lot not currently experiencing ongoing construction, in such a manner that said fill is not spread uniformly so that no area of fill differs in height by more than twenty-four inches (24") from any other area of fill on said lot. Provided, however, that upon written notice by the Building Official or a designated representative, the record property owner of any such lot shall be

allowed forty-five (45) days to remove or spread said fill in order to comply with this provision. Notice shall be deemed sufficient for this purpose if mailed, by certified mail, return receipt requested, to the last-known address of the record property owner, or if personally delivered to said owner.

EXCEPTION: This provision shall not apply to fill located upon the premises of a business, which provides said fill to others for compensation. A valid certificate of occupancy for such business shall be sufficient to establish the applicability of this exception.

Further, Article I, **Section 1.04**, Amendments, Additions and Deletions, **Subsection (D)**, is hereby amended so that said subsection reads as follows:

D. The amendment of the following I.R.C. provisions:

(1) The amendment of Section R101.2, entitled Scope., is amended by the deletion of the Exception in its entirety.

(2) The amendment of Section R102.4, entitled Referenced codes and standards., to read as follows:

R102.4 Referenced codes and standards. The codes, when specifically adopted, and standards referenced in this code shall be considered part of the requirements of this code to the prescribed extent of each such reference. Whenever amendments have been adopted to the referenced codes and standards, each reference to said code and standards shall be considered to reference the amendments as well. Any reference made to NFPA 70, ICC Electrical Code, or Chapters 33 through 42 shall mean the Electrical Code as adopted.

Where differences occur between provisions of this code and referenced codes and standards, the provisions of this code shall apply.

EXCEPTION: Where enforcement of a code provision would violate the conditions of the listing of the equipment or appliance, the conditions of the

listing and manufacture's instructions shall apply.

(3) The amendment of I.R.C. Section R202, entitled Definitions., to revise the definition of "Townhouse" and add the definition of “Naturally Durable Wood” to read as follows:

TOWNHOUSE. A single-family dwelling unit constructed in a group of attached units separated by property lines in which each unit extends from foundation to roof and with open space on at least two sides.

NATURALLY DURABLE WOOD. The heartwood of the following species with the exception that an occasional piece with corner sapwood is permitted if 90 percent or more of the width of each side on which it occurs is heartwood.

Decay resistant. Redwood, cedars, black locust and black walnut.

Termite resistant. Redwood and Eastern red cedar.

(4) The amendment of table R301.2(1), entitled Climatic and Geographic Design Criteria, to fill in and amend footnotes as follows:

Ground Snow Load	Wind Speed[d] (mph)	**Seismic** Design Category[h]
5 lb/ft^2	90 (3-sec-gust)/75 fastest mile	***A***

Weathering[a]	Frost line depth[b]	Termite[c]
Moderate	6"	Very heavy

WINTER DESIGN TEMP[d]	ICE SHIELD UNDER-LAYMENT REQUIRED[g]	FLOOD HAZARDS[f]	AIR FREEZING INDEX[h]	MEAN ANNUAL TEMP[i]
22°F	No	local code	69°F	64.9°F

For SI: 1 pound per square foot = 0.0479 kN/m.0², 1 mile per hour = 1.609 km/h.

a. Weathering may require a higher strength concrete or grade of masonry than necessary to satisfy the structural requirements of this code. The weathering column shall be filled in with the weathering index (i.e., “negligible,” “moderate” or “severe”) for concrete as determined from the Weathering Probability Map [Figure R301.2(3)]. The grade of masonry units shall be determined from ASTM C 34, C 55, C 62, C 73, C 90, C 129, C 145, C 216 or C 652.
b. The frost line depth may require deeper footings than indicated in Figure R403.1(1). The jurisdiction shall fill in the frost line depth column with the minimum depth of footing below finish grade.
c. The jurisdiction shall fill in this part of the table with “very heavy,” “moderate to heavy,” “slight to moderate,” or “none to slight” in accordance with Figure R301.2(6) depending on whether there has been a history of local damage.
d. The jurisdiction shall fill in this part of the table with the wind speed from the basic wind speed map [Figure R301.2(4)]. Wind exposure category shall be determined on a site-specific basis in accordance with Section R301.2.1.4.
e. The outdoor design dry-bulb temperature shall be selected from the columns of 97½-percent values for winter from Appendix D of the *International Plumbing Code*. Deviations from the Appendix D temperatures shall be permitted to reflect local climates or local weather experience as determined by the building official.
f. The jurisdiction shall fill in this part of the table with the Seismic Design Category determined from Section R301.2.2.1.
g. The jurisdiction shall fill in this part of the table with a) the date of the jurisdiction’s entry into the National Flood Insurance Program (date of adoption of the first code or ordinance for management of flood hazard areas), (b) the date(s) of the currently effective FIRM and FBFM, or other flood hazard map adopted by the community, as may be amended.
h. In accordance with Sections R905.2.7.1, R905.4.3, R905.5.3, R905.6.3, R905.7.3 and R905.8.3, for areas where the average daily temperature in January is 25°F (-4°C) or less, or where there has been a history of local damage from the effects of ice damming, the jurisdiction shall fill in this part of the table with “YES.” Otherwise, the jurisdiction shall fill in this part of the table with “NO.”

i. The jurisdiction shall fill in this part of the table with the 100-year return period air freezing index (BF-days) from Figure R403.3(2) or from the 100-year (99%) value on the National Climatic Data Center data table "Air Freezing Index-USA Method (Base 32° Fahrenheit)" at www.ncdc.noaa.gov/fpsf.html.

j. The jurisdiction shall fill in this part of the table with the mean annual temperature from the National Climatic Data Center data table "Air Freezing Index-USA Method (Base 32° Fahrenheit)" at www.ncdc.noaa.gov/fpsf.html.

(5) The amendment of I.R.C. Section 302, entitled Location on lot., by the addition of Section R302.4 entitled Fire sprinkler system., to read as follows:

R302.4 Fire sprinkler system. All R3 and U occupancies are required to have an approved fire sprinkler system.

EXCEPTION: Buildings with an approved fire department access.

(6) The amendment of I.R.C. Section R302.1, entitled Exterior walls., Exception, to read as follows:

EXCEPTIONS:

1. Tool and storage sheds, playhouses and similar structures exempted from permits by Section R105.2 are not required to provide wall protection based on location on the lot. Projections beyond the exterior wall shall not extend over the lot line.
2. Open metal carport structures may be constructed within zero (0) feet of the property line without fire-resistive or opening projection when the location of such is approved as required by other City ordinances.

(7) The amendment of I.R.C. Section R303.3, entitled Bathrooms., Exception, to read as follows:

EXCEPTIONS: The glazed areas shall not be required where artificial light and a mechanical ventilation system, complying with one of the following, are provided:

1. The minimum ventilation rates shall be 50 cfm (23.6 L/s) for intermittent ventilation or 20 cfm (9.4 L/s) for continuous ventilation. Ventilation air from the space shall be exhausted directly to the outside.

2. Bathrooms that contain only a water closet, lavatory or combination thereof may be ventilated with an approved mechanical recirculating fan or similar device designed to remove odors from the air.

(8) The amendment of I.R.C. Section R303.8, entitled Required heating., to read as follows:

R303.8 Required heating. Every dwelling unit shall be provided with heating facilities capable of maintaining a minimum room temperature of 68°F (20°C) at a point 3 feet (914 mm) above the floor and 2 feet (610 mm) from exterior walls in all habitable rooms at the design temperature.

(9) The amendment of I.R.C. Section R311.2.2, entitled Under stair protection., to read as follows:

R311.2.2 Under stair protection. Enclosed accessible space under stairs shall have walls, under stair surface and any soffits protected on the enclosed side with 5/8-inch (15.8 mm) fire-rated gypsum board or one-hour fire-resistive construction.

(10) The amendment of I.R.C. Section R311.4.3, entitled Landings at doors., to read as follows:

R311.4.3 Landings at doors. There shall be a floor or landing on each side of each exterior door.

The floor or landing at the exit door required by Section R311.4.1 shall not be more than 1.5 inches (38 mm) lower than the top of the threshold. The floor or landing at exterior doors other than the exit door required by Section R311.4.1 shall not be required to comply with this requirement but shall have a rise no greater than that permitted in Section R311.5.3.

Exception: The landing at an exterior doorway shall not be more than 7-3/4 inches (196 mm) below the top of the threshold, provided the door, other than an exterior storm or screen door, does not swing over the landing.

The width of each landing shall not be less than the door served. Every landing shall have a minimum dimension of 36 inches (914 mm) measured in the direction of travel.

(11) The amendment of I.R.C. Section R317.1, entitled Two-family dwellings., to add a second Exception to read as follows:

2. Two-family dwelling units that are also divided by a property line through the structure shall be separated as required for townhouses.

(12) The amendment of I.R.C. Section R318.1, entitled Moisture control., to delete the Exceptions and revise to read as follows:

R318.1 Moisture control. In all framed walls, floors and roof/ceilings comprising elements of the building thermal envelope, a vapor retarder, when installed, shall be installed in a manner so as to not trap moisture.

(13) The amendment of I.R.C. Section R319.1, entitled Location required., to read as follows:

R.319.1 Location required. Protection from decay shall be provided in the following locations by the use of naturally durable wood or wood that is pressure preservatively treated in accordance with AWPA C1, C2, C3, C4, C9, C15, C18, C22, C23, C24, C28, C31, C33, P1, P2, and P3.

1. Wood joists or the bottom of a wood structural floor when closer than 18 inches (457 mm) or wood girders when closer than 12 inches (305 mm) to the exposed ground in crawl spaces or unexcavated area located within the periphery of the building foundation.

2. All wood framing members that rest on concrete or masonry exterior foundation walls and are less than 8 inches (203 mm) from the exposed ground.

3. Sills and sleepers on a concrete or masonry slab that is in direct contact with the ground unless separated from such slab by an impervious moisture barrier.

4. The ends of wood girders entering exterior masonry or concrete walls having clearances of less than 0.5 inch (12.7 mm) on tops, sides and ends.

5. Wood siding, sheathing and wall framing on the exterior of a building having a clearance of less than 6 inches (152 mm) from the ground.

6. Wood structural members supporting moisture-permeable floors or roofs that are exposed to the weather, such as concrete or masonry slabs, unless separated from such floors or roofs by an impervious moisture barrier.

7. Wood furring strips or other wood framing members attached directly to the interior of exterior masonry walls or concrete walls below grade except where an approved vapor retarder is applied between the wall and the furring strips or framing members.

(14) The amendment of I.R.C. Section R320.1, entitled Subterranean termite control., to read as follows:

R320.1 Subterranean termite control. In areas favorable to termite damage as established by Table R301.2(1), methods of protection shall be by one of the following or any combination of these methods.

R320.1.1 Pressure preservatively treated or naturally durable wood shall be provided as per HUD standards. Pressure preservatively treated wood shall be treated in accordance with the standards cited in R319.1.

R320.1.1.1 Quality mark. Lumber and plywood required to be pressure preservatively treated in accordance with R324.1 shall bear the quality mark of an approved inspection agency which maintains continuing supervision, testing, and inspection over the quality of the product and which has been approved by an accreditation body which complies with the requirements of the American Lumber Standards Committee treated wood program.

R320.1.1.2 Field treatment. Field cut ends, notches and drilled holes of pressure preservatively treated wood shall be retreated in the field in accordance with AWPA M4.

(15) The amendment of I.R.C. Section R320.2, entitled Chemical soil treatment., to be entitled Pesticide treatment and to read as follows:

R320.2 Pesticide treatment. The concentrations, rate of application and treatment methods of the termiticide shall be consistent with the termiticide label. Pesticide treatment shall be provided using methods approved by the Environmental Protection Agency and the Texas Structural Pest Control Board.

R320.2.1 Physical Barriers. Physical barriers shall be installed as recognized by Texas Structural Pest Control Board.

(16) The amendment of I.R.C. Section R320.4, entitled Foam plastic protection., to read as follows:

R320.4 Foam plastic protection. In areas where the probability of termite infestation is “very heavy” as indicated in Figure R301.2(6), extruded and expanded polystyrene, polyisocyanurate and other foam plastics shall not be installed on the exterior face or under interior or exterior foundation walls or slab foundations located below grade. The clearance between foam plastics installed above grade and exposed earth shall be at least 6 inches (152 mm).

(17) The amendment of I.R.C. Section R323.1, entitled General., to read as follows:

R323.1 General. All buildings and structures, when permitted to be erected in areas prone to flooding as identified in Table R301.2(1) and classified as either flood hazard areas (including A Zones) or coastal high hazard areas (including V-Zones), shall be constructed and elevated as required by the provisions contained in this section or by other local provisions as applicable.

(18) The amendment of I.R.C. Section R602.10.6, entitled Alternate braced wall panels., to add a third paragraph to read as follows:

3. Vertical wall segments in the first of one-or first of two-story buildings next to wall openings shall be permitted to have a 6:1 height-to-width ratio (with height being measured from top of header to sill plate) when constructed in accordance with the following provisions. Each panel shall have a length of not less than 16 inches (406 mm) and a height of not more than 10 feet (3048 mm). Each panel shall be sheathed on one face with a single layer of 3/8-inch-minimum-thickness (9.5 mm) wood structural panel sheathing nailed with 8d common or galvanized box nails in accordance with Figure R602.10.5(2). The wood structural panel sheathing shall extend up over the solid sawn or glued-laminated header and shall be nailed in accordance with Figure R602.10.6. The header shall extend between the inside faces of the first full-length outer studs of each panel. The clear span of the header between the inner studs of each panel shall be not less than six feet (1829 mm) and not more than 18 feet (5486 mm) in length. A strap with an uplift capacity of not less than 1000 pounds (454 kg) shall fasten the header to the side of the inner studs opposite the sheathing. Two anchor bolts shall be installed in accordance with Section R403.1.6, and plate washers shall be a minimum of 2 inches by 2 inches by 3/16 inch (51 mm by 51 mm by 4.88 mm) thick and shall be used on each bolt. This exception is only permitted in Seismic Design Categories A-C.

Figure R602.10.6
BRACED WALL PANEL

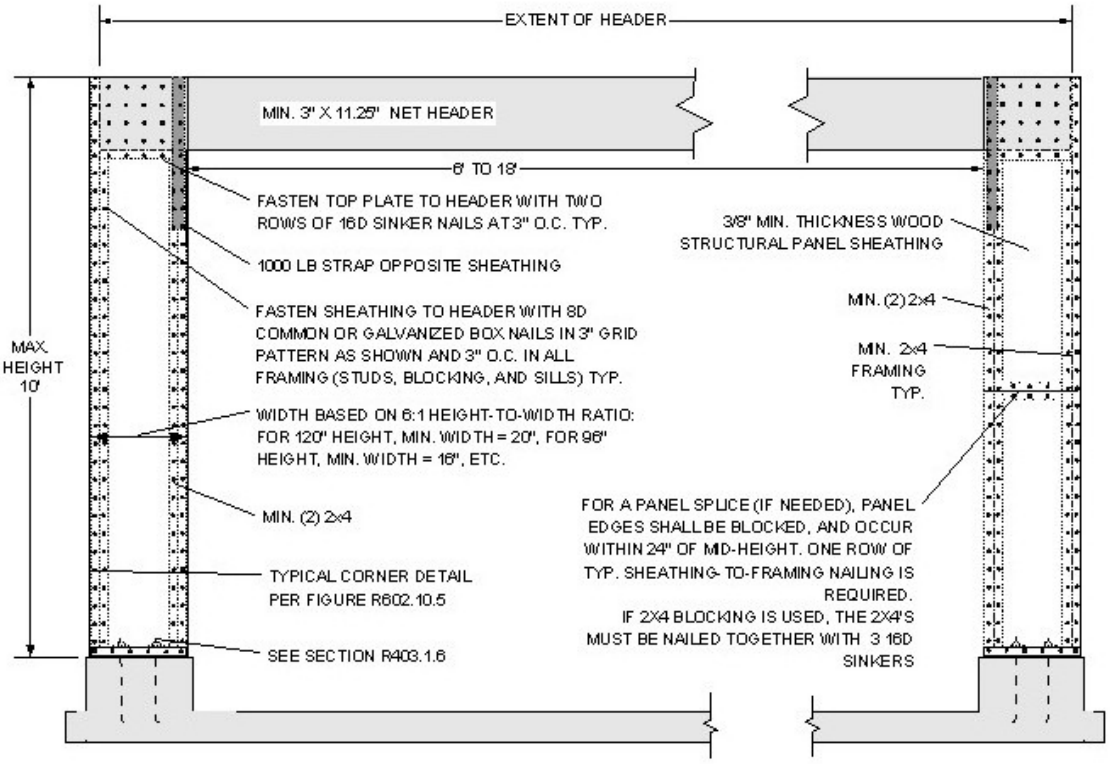

(19) The amendment of I.R.C. Section R703.7.4.1, entitled Size and spacing., to add a second paragraph to read as follows:

For 2.67 square feet (0.248 m^2) of wall area, the following dimensions shall be adhered to:

1. When ties are placed on studs 16" o.c., they shall be spaced no further apart than 24" vertically starting approximately 12" from the foundation.
2. When ties are placed on studs 24" o.c., they shall be spaced no further apart than 16" vertically starting approximately 8" from the foundation.

(20) The addition of I.R.C. Section R902.3, entitled Minimum roof class., to read as follows:

R902.3 Minimum roof class. All roof coverings shall be a minimum Class C. All individual

replacement shingles or shakes shall be a minimum Class C.

EXCEPTION: Non-classified roof coverings shall be permitted on buildings of U occupancies having not more than 120 sq. ft. of projected roof area. When exceeding 120 sq. ft. of projected roof area, buildings of U occupancies may use non-rated non-combustible coverings.

(21) The amendment of I.R.C. Section R907.1, entitled General., to add a sentence to read as follows:

All individual replacement shingles or shakes shall comply with Section R902.3.

(22) The amendment of I.R.C. Section N1101.2.1, entitled Detached one- and two-family dwellings, type A-1., to read as follows:

N1101.2.1 Detached one- and two-family dwellings. Compliance shall be demonstrated by one of the following:

1. Meeting the requirements of this chapter for buildings with a glazing area that does not exceed 15 percent of the gross area of exterior walls;
2. Meeting the requirements of this chapter for buildings with a glazing area that is greater than 15 percent but not exceeding 20 percent of the gross area of exterior walls and air conditioning equipment rated 12 SEER or higher;
3. Meeting the requirements of this chapter for buildings with a glazing area that is greater than 20 percent but not exceeding 25 percent of the gross area of exterior walls and air conditioning equipment rated 14 SEER or higher; or
4. Meeting the requirements of the *International Energy Conservation Code* for detached one-and two-family dwellings.

(23) The addition of I.R.C. Section N1101.3.4, entitled Exterior basement or slab insulation., to read as follows:

N1101.3.4 Exterior basement or slab insulation. When susceptibility to termite damage is classified as "very heavy" according to Table R301.2(1), designs employing basement or slab exterior insulation capable of harboring termites shall not be utilized.

(24) The amendment of I.R.C. Section N1102.1, entitled Thermal performance criteria., to read as follows:

N1102.1 Thermal performance criteria. The minimum required insulation R-value or maximum required U-factor for each element in the building thermal envelope (fenestration, roof/ceiling, opaque wall, floor, slab edge, crawl space wall and basement wall) shall be in accordance with the criteria in Table N1102.1.

Detached one- and two-family dwellings with greater than 25 percent glazing area; residential buildings, townhouses, with greater than 25 percent glazing area shall determine compliance using the building envelope requirements of the *International Energy Conservation Code*.

(25) The amendment of I.R.C. Table N1102.1, entitled Simplified Prescriptive Building Envelope Thermal Component Criteria Minimum Required Thermal Performance (U-factor and R-value)., to read as follows:

MAXIMUM GLAZING *U*-FACTOR [Btu/(hr*ft^2*F)]	MINIMUM INSULATION *R*-VALUE [(hr*ft^2*F)/Btu]						
	Ceilings open to Attic Space	Ceiling Joist/ Roof Rafter Assembly	***Walls***	Floors	Basement Walls	Slab perimeter	Crawl space walls
0.65	R-38	R-22	R-13	R-19	R-0	R-0	R-7[a]

a. Crawl space insulation is only required for structures with uninsulated floors.

Use of this table is limited to projects where the cathedral ceiling area is limited to one third or less of the total ceiling area.

(26) The exception of I.R.C. Section N1102.1.6, entitled Slab-on-grade floors., to read as follows:

Exception: Slab perimeter insulation is not required for unheated slabs in areas of very heavy termite infestation probability as shown in Figure R301.2(6).

(27) The amendment of I.R.C. Section N1102.2, entitled Maximum solar heat gain coefficient for fenestration products., to read as follows:

N1102.2 Maximum solar heat gain coefficient for fenestration products. The area-weighted-average solar heat gain coefficient (SHGC) for glazed fenestration installed in climate zones with less than 3,500 HDD shall not exceed 0.40.

(28) The amendment of I.R.C. Section N1102.2, entitled Maximum solar heat gain coefficient for fenestration products., adding Exceptions to read as follows:

Exceptions:

1. Any glazing facing within 45 degrees of true north;
2. Any glazing facing within 45 degrees of true south which is shaded along its full width by a permanent overhang with a projection factor of 0.3 or greater.
3. Any fenestration with permanently attached screens where the screens have a rated shading coefficient of .6 or less.

(29) The amendment of Table N1103.5 entitled MINIMUM HVAC PIPING INSULATION THICKNESSES[a]., as follows, and the amendment of footnote “b” as follows:

Cooling Systems	**FLUID TEMP RANGE (^{o}F)**	**INSULATION THICKNESS inches[b]**
Chilled water, refrigerant or brine	40-55	.5
	Below 40	1.25

b. For piping lengths in excess of five (5) feet (1,524 mm) exposed to outdoor air, increase thickness by 0.5 inch (13 mm).

(30) The amendment of I.R.C. Section M1305.1.3, entitled Appliances in attics., to read as follows:

M1305.1.3 Appliances in attics. Attics containing appliances requiring access shall be provided with an opening and a clear and unobstructed passageway large enough to allow removal of the largest appliance, but not less than 30 inches (762 mm) high and 22 inches (559 mm) wide and not more than 20 feet (6096 mm) in length when measured along the centerline of the passageway from the opening to the appliance. The passageway shall have continuous, unobstructed solid flooring not less than 24 inches (610 mm) wide. A level service space at least 30 inches (762 mm) deep and 30 inches (762 mm) wide shall be present along all sides of the appliance where access is required. The clear access opening dimensions shall be a minimum of 20 inches by 30 inches (508 mm by 762 mm), or larger where such dimensions are not large enough to allow removal of the largest appliance. As a minimum, access to the attic space shall be provided by one of the following:

1. A permanent stair.
2. A pull down stair.
3. An access door from an upper floor level.

EXCEPTION: The passageway and level service space are not required where the appliance is capable of being serviced and removed through the required opening.

(31) The amendment of I.R.C. Section M1305.1.3.1, entitled Electrical requirements., to add a sentence to read as follows:

Low voltage wiring of 50 Volts or less shall be installed in a manner to prevent physical damage.

(32) The amendment of I.R.C. Section M1305.1.4.1, entitled Ground clearance., to read as follows:

M1305.1.4.1 Ground clearance. Appliances supported from the ground shall be level and firmly supported on a concrete slab or other approved material extending above the adjoining grade a minimum of 3 inches (76 mm). Appliances suspended from the floor shall have a clearance of not less than 6 inches (152 mm) above the ground.

(33) The amendment of I.R.C. Section M1305.1.4.3, entitled Electrical requirements., to add a sentence to read as follows:

Low voltage wiring of 50 Volts or less shall be installed in a manner to prevent physical damage.

(34) The amendment of I.R.C. Section M1307.3.1, entitled Protection from impact., by deleting it in its entirety.

(35) The amendment of I.R.C. Section M1411.3 entitled Condensate disposal., to read as follows:

M1411.3 Condensate disposal. Condensate from all cooling coils and evaporators shall be conveyed from the drain pan outlet to a permanently wet p-trap. Condensate shall not discharge in a publicly exposed area such as into a street, alley, sidewalk or other areas so as to cause a nuisance.

Exceptions:

1. Condensate may discharge directly to a roof drain that connects to an underground storm sewer system,
2. Condensate may discharge directly onto roofs covered with membrane type roof coverings where the condensate will drain to a roof drain that connects to an underground storm sewer system,
3. Condensate may discharge to a landscaped area containing flowers and other bedding plants other than turf. There must be five square feet of landscaped area for each ton of refrigeration, or
4. Condensate may discharge to a French drain consisting of a pit excavated below grade that is not less than 24 inches

(610 mm) in any dimension. The pit shall be filled with coarse gravel and the drainpipe shall extend into the pit and be securely anchored. A single drain shall not receive the condensate discharge of more than 10 tons nominal of combined cooling capacity. The pit shall be covered with sod after inspection. The French drain shall not be located so that it will receive direct discharge from a roof or downspout.

(36) The amendment of I.R.C. Section M1411.3.1, Auxiliary and secondary drain systems., by adding paragraph number 4 to read as follows:

4. Discharge, as noted, shall be to a conspicuous point of disposal to alert occupants in the event of a stoppage of the drain. However, the conspicuous point shall not create a hazard such as dripping over a walking surface or other areas so as to create a nuisance.

(37) The amendment of I.R.C. Section 1411.4 entitled Insulation of refrigerant piping., to read as follows:

M1411.4 Insulation of refrigerant piping. Insulation of refrigerant piping shall be in accordance with Chapter 11 of this code.

(38) The amendment of I.R.C. Section M1501.2, entitled Exhaust duct size., to read as follows:

M1501.2 Exhaust duct size. The minimum diameter of the exhaust duct shall be as recommended by the manufacturer, shall be at least the diameter of the appliance outlet and shall be a minimum nominal size of 4 inches (102 mm) diameter. The size of duct shall not be reduced along its developed length nor at the point of termination.

(39) The amendment of I.R.C. Section M1501.3, entitled Length limitation., to read as follows:

M1501.3 Length limitation. The maximum length of a clothes dryer exhaust duct shall not exceed 25

feet (7620 mm) from the dryer location to the wall or roof termination with not more than two bends. When extra bends are installed, the maximum length of the duct shall be reduced 2.5 feet (762 mm) for each 45-degree (0.79 rad) bend and 5 feet (1524 mm) for each 90-degree (1.6 rad) bend that occur after the first two bends, measuring in the direction of airflow. The maximum length of the exhaust duct does not include the transition duct.

Exceptions:

1. Where a clothes dryer booster fan is installed and listed and labeled for the application, the maximum length of the exhaust duct, including any transition duct, shall be permitted to be in accordance with the booster fan manufacturer's installation instructions. Where a clothes dryer booster fan is installed and not readily accessible from the room in which the dryer is located, a permanent identifying label shall be placed adjacent to where the exhaust duct enters the wall. The label shall bear the words "This dryer exhaust system is equipped with a remotely located booster fan."

2. Where the make and model of the clothes dryer to be installed is known and the manufacturer's installation instructions for such dryer are provided to the building official, the maximum length of the exhaust duct, including any transition duct, shall be permitted to be in accordance with the dryer manufacturer's installation instructions.

(40) The amendment of I.R.C. Section M2005.2, entitled Prohibited locations., to read as follows:

M2005.2 Prohibited locations. Fuel-fired water heaters shall not be installed in a room used as a storage closet. Water heaters located in a bedroom or bathroom shall be installed in a sealed enclosure so that combustion air will not be taken from the living space. Access to such enclosure may be from the bedroom or bathroom when through a solid door, weather-stripped in accordance with the exterior door air leakage requirements of the *International Energy Conservation Code* and equipped with an approved self-closing device. Direct-vent water heaters are not required to be installed within an enclosure.

(41) The amendment of I.R.C. Section G2408.3 (305.4), entitled Private garages., by deleting it in its entirety.

(42) The amendment of I.R.C. Section G2412.5 (401.5), entitled Identification., to add a second paragraph to read as follows:

Both ends of each section of medium pressure corrugated stainless steel tubing (CSST) shall identify its operating gas pressure with an approved tag. The tags are to be composed of aluminum or stainless steel and the following wording shall be stamped into the tag:

"WARNING
½ to 5 psi gas pressure
Do Not Remove"

(43) The amendment of I.R.C. Section G2413.3 (402.3), entitled Sizing., to add an exception to read as follows:

EXCEPTION: Corrugated stainless steel tubing (CSST) shall be a minimum of ½".

(44) The amendment of I.R.C. Section G2415.6 (404.6), entitled Piping in solid floors., to read as follows:

G2415.6 (404.6) Piping in solid floors. Piping in solid floor shall be laid in channels in the floor

and covered in a manner that will allow access to the piping with a minimum amount of damage to the building. Where such piping is subject to exposure to excessive moisture or corrosive substances, the piping shall be protected in an approved manner. As an alternative to installation in channels, the piping shall be installed in accordance with Section G2415.11 (404.11).

(45) The amendment of I.R.C. Section G2415.9 (404.9), entitled Minimum burial depth., to read as follows:

G2415.9 (404.9) Minimum burial depth. Underground piping systems shall be installed a minimum depth of 18 inches (458 mm) below grade.

(46) The amendment of I.R.C. Section G2415.9.1 (404.9.1), entitled Individual outside appliances., by deleting it in its entirety.

(47) The amendment of I.R.C. Section G2417.1 (406.1), entitled General., to read as follows:

G2417.1 (406.1) General. Prior to acceptance and initial operation, all piping installations shall be inspected and pressure tested to determine that the materials, design, fabrication, and installation practices comply with the requirements of this code. The permit holder shall make the applicable tests prescribed in Sections 2417.1.1 through 2417.7.4 to determine compliance with the provisions of this code. The permit holder shall give reasonable advance notice to the code official when the piping system is ready for testing. The equipment, material, power and labor necessary for the inspections and test shall be furnished by the permit holder and the permit holder shall be responsible for determining that the work will withstand the test pressure prescribed in the following tests.

(48) The amendment of I.R.C. Section G2417.4 (406.4), entitled Test pressure measurements., to read as follows:

G2417.4 (406.4) Test pressure measurement. Test pressure shall be measured with a monometer or

with a pressure-measuring device designed and calibrated to read, record, or indicate a pressure loss caused by leakage during the pressure test period. The source of pressure shall be isolated before the pressure tests are made. For tests requiring a pressure of 3 psig, mechanical gauges shall utilize a dial with a minimum diameter of three and one half inches (3 ½″), a set hand, 1/10 pound incrementation and pressure range not to exceed 6 psi for tests requiring a pressure of 3 psig. For tests requiring a pressure of 10 psig, mechanical gauges shall utilize a dial with a minimum diameter of three and one-half inches (3 ½″), a set hand, a minimum of 2/10 pound incrementation and a pressure range not to exceed 20 psi.

(49) The amendment of I.R.C. Section G2417.4.1 (406.4.1), entitled Test pressure., to read as follows:

G2417.4.1 (406.4.1) Test pressure. The test pressure to be used shall be not less than 3 psig (20 kPa gauge), or at the discretion of the Code Official, the piping and valves may be tested at a pressure of at least six (6) inches (152 mm) of mercury, measured with a manometer or slope gauge. For welded piping, and for piping carrying gas at pressures in excess of fourteen (14) inches water column pressure (3.48 kPa) (1/2 psi) and less than 200 inches of water column pressure (52.2 kPa) (7.5 psi), the test pressure shall not be less than ten (10) pounds per square inch (69.6 kPa). For piping carrying gas at a pressure that exceeds 200 inches of water column (52.2 kPa) (7.5 psi), the test pressure shall be not less than one and one-half times the proposed maximum working pressure.

(50) The amendment of I.R.C. Section G2417.4.2 (406.4.2), entitled Test duration., to read as follows:

G2417.4.2 (406.4.2) Test duration. Test duration shall be held for a length of time satisfactory to the Code Official, but in no case for less than fifteen (15) minutes. For welded piping, and for piping carrying gas at pressures in excess of fourteen (14) inches water column pressure (3.48

kPa), the test duration shall be held for a length of time satisfactory to the Code Official, but in no case for less than thirty (30) minutes.

(51) The addition of I.R.C. Section G2420.1.4, entitled Valves in CSST installations., to read as follows:

G2420.1.4 Valves in CSST installations. Shutoff valves installed with corrugated stainless steel (CSST) piping systems shall be supported with an approved termination fitting, or equivalent support, suitable for the size of the valves, of adequate strength and quality, and located at intervals so as to prevent or damp out excessive vibration but in no case greater than 12-inches from the center of the valve. Supports shall be installed so as not to interfere with the free expansion and contraction of the system's piping, fittings, and valves between anchors. All valves and supports shall be designed and installed so they will not be disengaged by movement of the supporting piping.

(52) The amendment of I.R.C. Section G2421.1 (410.1), entitled Pressure regulators., to add a second paragraph and an exception to read as follows:

Access to regulators shall comply with the requirements for access to appliances as specified in Section M1305.

EXCEPTION: A passageway or level service space is not required when the regulator is capable of being serviced and removed through the required attic opening.

(53) The amendment of I.R.C. Section G2439.5 (613.6), entitled Clothes dryer ducts., to add a sentence to read as follows:

The size of duct shall not be reduced along its developed length nor at the point of termination.

(54) The amendment of I.R.C. Section G2439.5.1 (613.6.1), entitled Maximum length., to read as follows:

G2439.5.1 (613.6.1) Maximum length. The maximum length of a clothes dryer exhaust duct shall not

exceed 25 feet (7620 mm) from the dryer location to the outlet terminal with not more than two bends. When extra bends are installed, the maximum length of the duct shall be reduced 2½ feet (762 mm) for each 45-degree (0.79 rad) bend and 5 feet (1524 mm) for each 90-degree (1.6 rad) bend that occur after the first two bends, measuring in the direction of airflow.

(Exception remains unchanged.)

(55) The amendment of I.R.C. Section G2445.2 (621.2), entitled Prohibited use., to read as follows:

G2445.2 (621.2) Prohibited use. One or more unvented room heaters shall not be used as the sole source of comfort heating in a dwelling unit.

EXCEPTION: Existing approved unvented heaters may continue to be used in dwelling units, in accordance with the code provisions in effect when installed, when approved by the Code Official unless an unsafe condition is determined to exist as described in *International Fuel Gas Code* Section 108.7.

(56) The amendment of I.R.C. Section G2448.1.1 (624.1.1), entitled Installation requirements., to read as follows:

G2448.1.1 (624.1.1) Installation requirements. The requirements for water heaters relative to access, sizing, relief valves, drain pans and scald protection shall be in accordance with this code.

(57) The amendment of I.R.C. Section P2503.5.1, entitled Rough plumbing., to add a second paragraph to item #1 to read as follows:

Shower receptors shall be tested for water tightness by filling with water to the level of the rough threshold. The drain shall be plugged in a manner so that both sides of pans shall be subjected to the test at the point where it is clamped to the drain.

(58) The amendment of I.R.C. Section P2503.7.2, entitled Testing., to read as follows:

P2503.7.2 Testing. Reduced pressure principle backflow preventers, double check valve assemblies, double-detector check valve assemblies and pressure vacuum breaker assembles shall be tested at the time of installation, immediately after repairs or relocation at regular intervals as required by applicable state or local provisions.

(59) The amendment of I.R.C. Section P2603.2.1, entitled Protection against physical damage., to read as follows:

P2603.2.1 Protection against physical damage. In concealed locations, where piping, other than cast-iron or galvanized steel, is installed through holes or notches in studs, joists, rafters or similar members less than 1.5 inches (38 mm) from the nearest edge of the member, the pipe shall be protected by shield plates. Protective shield plates shall be a minimum of .062-inch – thick (1.6 mm) steel, and shall cover the area of the pipe where the member is notched or bored.

(60) The addition of I.R.C. Section P2603.6.1, entitled Sewer depth., to read as follows:

P2603.6.1 Sewer depth. Building sewers shall be a minimum of 12 inches (304 mm) below grade.

(61) The amendment of I.R.C. Section P2709.1, entitled Construction., to add an exception to read as follows:

EXCEPTION: Showers designed to comply with ICC/ANSI A117.1.

(62) The amendment of Section P2709.2, entitled Lining required., to read as follows:

P2709.2 Lining required. The adjoining walls and floor framing, enclosing on-site built-up shower receptors shall be lined with sheet lead, copper or a plastic liner material that complies with either ASTM D 4068 or ASTM D 455; both shall have a minimum thickness of .040 inches (1.02 mm). The lining material shall extend not less than 3

inches (76 mm) beyond or around the rough jambs and not less than 3 inches (76 mm) above finished thresholds. Hot mopping shall be permitted in accordance with Section P2709.2.1.

(63) The amendment of I.R.C. Section P2801.6, entitled Water heaters installed in garages., to add an exception to read as follows:

EXCEPTION: Elevation of the ignition source is not required for water heaters that are listed as flammable vapor resistant and for installation without elevation.

(64) The addition of I.R.C. Section P2801.7, entitled Water heaters above ground or floor., and Section P2801.7.1 to read as follows:

P2801.7 Water heaters above ground or floor. When the mezzanine or platform in which a water heater is installed is more than eight (8) feet (2438 mm) above the ground or floor level, it shall be made accessible by a stairway or permanent ladder fastened to the building.

P2801.7.1 Whenever the mezzanine or platform is not adequately lighted or access to a receptacle outlet is not obtainable from the main level, lighting and a receptacle outlet shall be provided in accordance with Section M1305.1.3.1.

(65) The amendment of I.R.C. Section P2803.6.1, entitled Requirements for discharge pipe., by adding a last sentence to read as follows:

When discharging outside the building, the point of discharge shall be with the end of the pipe not more than two (2) feet (610 mm) nor less than six (6) inches (152 mm) above the ground.

(66) The amendment of I.R.C. Section P2902.4.3, entitled Lawn irrigation systems, to read as follows:

P2902.4.3 Lawn irrigation systems. The potable water supply system to lawn irrigation systems shall be protected against backflow by an atmospheric-type vacuum breaker, a pressure type vacuum breaker, a double check assembly or a

reduced principle backflow preventer. A valve shall not be installed downstream from an atmospheric vacuum breaker. Where chemicals are introduced into the system, the potable water supply shall be protected against backflow by a reduced pressure principle backflow preventer.

(67) The amendment of I.R.C. Table P2904.4.1, entitled Water Service Pipe., by deleting all references (row items 11 and 12) to Polybutylene (PB) plastic pipe and tubing.

(68) The amendment of I.R.C. Table 2904.5, entitled WATER DISTRIBUTION PIPE, by deleting all references (row 8) to Polybutylene (PB) plastic pipe and tubing.

(69) The amendment of I.R.C. Section P2904.5, entitled Water distribution pipe., 2904.5.1, entitled Under concrete slabs., and 2904.14, entitled Underground joints., by deleting reference to "PB" plastic pipe.

(70) The amendment of I.R.C. Section P3103.1, entitled Roof extension., to read as follows:

P3103.1 Roof extension. All open vent pipes which extend through a roof shall be terminated at least six (6) inches (152 mm) above the roof except that where a roof is to be used for any purpose other than weather protection, the vent extensions shall be run at least seven (7) feet (2134 mm) above the roof.

(71) The amendment of I.R.C Section P3105.2, entitled Fixture drains., to read as follows:

P3105.2 Fixture drains. The total fall in a fixture drain due to pipe slope shall not exceed one pipe diameter, nor shall the vent pipe connection to a fixture drain, except for water closets, be below the weir of the trap.

(72) The amendment of P3105.3, entitled Vertical leg for waste fixture drains., and Figure P3105.3, entitled Vertical leg fixture drain schematic., by deleting them in their entirety.

(73) The amendment of I.R.C. Section P3112.2, entitled Vent connection., to read as follows:

P3112.2 Installation. Traps for island sinks and similar equipment shall be roughed in above the floor and may be vented by extending the vent as high as possible, but not less than the drainboard height and then returning it downward and connecting it to the horizontal sink drain immediately downstream from the vertical fixture drain. The return vent shall be connected to the horizontal drain through a wye-branch fitting and shall, in addition, be provided with a foot vent taken off the vertical fixture vent by means of a wye-branch immediately below the floor and extending to the nearest partition and then through the roof to the open air or may be connected to other vents at a point not less than six (6) inches (152 mm) above the flood level rim of the fixtures served. Drainage fittings shall be used on all parts of the vent below the floor level and a minimum slope of one-quarter (1/4) inch per foot (20.9 mm/m) back to the drain shall be maintained. The return bend used under the drainboard shall be a one (1) piece fitting or an assembly of a forty-five (45) degree (0.79 radius), a ninety (90) degree (1.6 radius) and a forty-five (45) degree (0.79 radius) elbow in the order named. Pipe sizing shall be as elsewhere required in this Code. The island sink drain, upstream of the return vent, shall serve no other fixtures. An accessible cleanout shall be installed in the vertical portion of the foot vent.

(74) The deletion of I.R.C. Section P3112.3, entitled Vent installation below the fixture flood level rim., in its entirety.

(75) The amendment of I.R.C. Appendix G, entitled *Swimming Pools, Spas and Hot Tubs*, to read as follows:

APPENDIX G
SWIMMING POOLS, SPAS AND HOT TUBS

SECTION AG 101
GENERAL

AG 101.1 General. The provisions of this appendix shall control the design and construction of swimming pools, spas and hot tubs installed in or on the lot of a one- and two-family dwelling.

SECTION AG 102
PERMITS AND INSPECTIONS

AG 102.1 Permit Required. A permit shall be required to construct and/or erect a swimming pool. A permit may only be issued to a registrant as set out in Article IV of the Construction Chapter.

AG 102.2 Submittal required. An application for a permit to construct and/or erect a swimming pool shall be accompanied by the following:

1. Two (2) site plans indicating the location of the proposed swimming pool and the associated swimming pool decks on the lot that have been stamped by the electrical service provider,
2. Lot grading plans, including surface drain inlets and discharges, for both before and after construction,
3. The plans for pool barrier compliance, and
4. Any additional information that may be required by the Building Official.

AG 102.3 Inspection required. After an application for a permit to construct and/or erect a swimming pool has been issued in accordance with Article IV of the Construction Chapter, the following inspections are required as a minimum as applicable:

1. Belly steel inspection,
2. Electrical bonding inspection,
3. Underground electrical inspection,
4. Underground plumbing and gas piping inspection, and
5. Final inspection to include verification of swimming pool barrier compliance (prior to plastering the swimming pool).

AG 102.4 Lot grading and surface drainage. The construction and/or erection of a swimming pool may not alter the lot grading or drainage patterns intended by the lot’s approved grading plan and/or

the subdivision’s approved grading and drainage plans. The point of discharge of collected surface drains and rain gutters may not exit onto adjacent properties as a concentrated point of discharge.

AG 102.5 It shall be unlawful for the registrant to permit or cause the swimming pool to be filled with water before the existence of a lawful swimming pool barrier is inspected and approved.

SECTION AG 103
DEFINITIONS

AG 103.1 General. For the purposes of these requirements, the terms used shall be defined as follows and as set forth in Chapter 2.

ABOVE-GROUND/ON-GROUND POOL. See "Swimming pool."

BARRIER. A fence, wall, building wall or combination thereof which completely surrounds the swimming pool and obstructs access to the swimming pool.

HOT TUB. See "Swimming pool."

IN-GROUND POOL. See "Swimming pool."

POOL DECK. A flat walking surface consisting of wood, stone, brick, concrete or other similar material located within 5 feet (1524 mm) of the water’s edge of a swimming pool.

RESIDENTIAL. That which is situated on the premises of a detached one- or two-family dwelling or a one-family townhouse not more than three stories in height.

SELF-CLOSING GATE. A gate which closes or shuts automatically without the aid of human, electrical, solar or battery power after being opened.

SELF-CLOSING AND SELF-LATCHING DEVICE. A device that causes a gate to automatically close and latch without human, electrical, solar or battery power.

SPA, NONPORTABLE. See "Swimming pool."

SPA, PORTABLE. A nonpermanent structure intended for recreational bathing, in which all controls, water-heating and water-circulating equipment are an integral part of the product.

SWIMMING POOL. Any structure intended for swimming or recreational bathing that contains water over 24 inches (610 mm) deep. This includes in-ground, above-ground and on-ground swimming pools, hot tubs and spas.

SWIMMING POOL, INDOOR. A swimming pool which is totally contained within a structure and surrounded on all four sides by walls of said structure.

SWIMMING POOL, OUTDOOR. Any swimming pool which is not an indoor pool.

SECTION AG 104
SWIMMING POOLS

AG 104.1 In-ground pools. In-ground pools shall be designed and constructed in conformance with ANSI/NSPI-5 as listed in Section AG108.

AG 104.2 Above-ground and on-ground pools. Above-ground and on-ground pools shall be designed and constructed in conformance with ANSI/NSPI-4 as listed in Section AG108.

SECTION AG 105
SPAS AND HOT TUBS

AG 105.1 Permanently installed spas and hot tubs. Permanently installed spas and hot tubs shall be designed and constructed in conformance with ANSI/NSPI-3 as listed in Section AG 108.

AG 105.2 Portable spas and hot tubs. Portable spas and hot tubs shall be designed and constructed in conformance with ANSI/NSPI-6 as listed in Section AG108.

SECTION AG 106
BARRIER REQUIREMENTS

AG 106.1 Application. The provisions of this chapter shall control the design of barriers for residential swimming pools, spas and hot tubs. These design controls are intended to provide protection against potential drownings and near-drownings by restricting access to swimming pools, spas and hot tubs.

AG 106.2 Outdoor swimming pool. An outdoor swimming pool, including an in-ground, above-ground or on-ground pool, hot tub or spa shall be provided with a barrier which shall comply with the following:

1. The top of the barrier shall be at least 48 inches (1219 mm) above grade measured on the side of the barrier which faces away from the swimming pool. The maximum vertical clearance between grade and the bottom of the barrier shall be 2 inches (51 mm) measured on the side of the barrier which faces away from the swimming pool. Where the top of the pool structure is above grade, such as an above-ground pool, the barrier may be at ground level, such as the pool structure, or mounted on top of the pool structure. Where the barrier is mounted on top of the pool structure, the maximum vertical clearance between the top of the pool structure and the bottom of the barrier shall be 4 inches (102 mm).
2. Openings in the barrier shall not allow passage of a 4-inch-diameter (102 mm) sphere.
3. Solid barriers which do not have openings, such as a masonry or stone wall, shall not contain indentations or protrusions except for normal construction tolerances and tooled masonry joints.
4. Where the barrier is composed of horizontal and vertical members and the distance between the tops of the horizontal members is less than 45 inches (1143 mm), the horizontal members shall be located on the swimming pool side of the fence. Spacing between vertical members shall not exceed 1.75 inches (44 mm) in width. Where there are decorative cutouts within vertical members, spacing within the cutouts shall not exceed 1.75 inches (44 mm) in width.

EXCEPTION: When the horizontal members are part of a fence that is at least 6 feet (1829 mm) in height, the horizontal members need not be on the pool side of the barrier.

5. Where the barrier is composed of horizontal and vertical members and the distance between the tops of the horizontal members is 45 inches (1143 mm) or more, spacing between vertical members shall not exceed 4 inches (102 mm). Where there are decorative cutouts within vertical members, spacing within the cutouts shall not exceed 1.75 inches (44 mm) in width.
6. Maximum mesh size for chain link fences shall be a 1.25-inch (32 mm) square unless the fence is provided with slats fastened at the top or the bottom which reduce the openings to not more than 1.75 inches (44 mm).
7. Where the barrier is composed of diagonal members, such as a lattice fence, the maximum opening formed by the diagonal members shall not be more than 1.75 inches (44 mm).
8. Access gates shall comply with the requirements of Section AG 106.2, Items 1 through 7, and shall be equipped to accommodate a locking device. Pedestrian access gates shall open outward away from the pool and shall be self-closing and have a self-latching device. Gates other than pedestrian access gates shall have a self-latching device. Where the release mechanism of the self-latching device is located less than 54 inches (1372 mm) from the bottom of the gate, the release mechanism and openings shall comply with the following:
   - 8.1. The release mechanism shall be located on the pool side of the gate at least 3 inches (76 mm) below the top of the gate, and
   - 8.2. The gate and barrier shall have no opening greater than 0.5 inch (12.7 mm) within 18 inches (457 mm) of the release mechanism.
   - 8.3. Driveway access gates across a paved or improved surface intended for regular vehicle access shall not be located in a swimming pool barrier.

9. Where a wall of a dwelling serves as part of the barrier one of the following conditions shall be met:
   9.1. All doors with direct access to the pool through that wall shall be equipped with an alarm which produces an audible warning when the door and its screen, if present, are opened. The alarm shall sound continuously for a minimum of 30 seconds immediately after the door is opened and be capable of being heard throughout the house during normal household activities. The alarm shall automatically reset under all conditions. The alarm system shall be equipped with a manual means, such as touchpad or switch, to temporarily deactivate the alarm for a single opening. Such deactivation shall last for not more than 15 seconds. The deactivation switch(es) shall be located at least 54 inches (1372 mm) above the threshold of the door; or
   9.2. Other means of protection, such as self-closing doors with self-latching devices, which are approved by the governing body, shall be acceptable so long as the degree of protection afforded is not less than the protection afforded by Item 9.1 described above.
10. Where an above-ground pool structure is used as a barrier or where the barrier is mounted on top of the pool structure and the means of access is a ladder or steps, then:
   10.1. The ladder or steps shall be capable of being secured, locked or removed to prevent access, or
   10.2. The ladder or steps shall be surrounded by a barrier which meets the requirements of Section AG 106.2, Items 1 through 9. When the ladder or steps are secured, locked or removed, any opening created shall not allow the passage of a 4-inch-diameter (102 mm) sphere.

AG 106.3 Indoor swimming pool. All walls surrounding an indoor swimming pool shall comply with Section AG 106.2, Item 9.

AG 106.4 Prohibited locations. Barriers shall be located so as to prohibit permanent structures, equipment or similar objects from being used to climb the barriers.

AG 106.5 Barrier exceptions. Spas or hot tubs with a safety cover which complies with ASTM F 1346, as listed in Section AG 108, shall be exempt from the provisions of this appendix.

SECTION AG 107
ABBREVIATIONS

AG 107.1 General.

ANSI-American National Standards Institute, 11 West 42nd Street, New York, NY 10036

ASTM-American Society for Testing and Materials, 1916 Race Street, Philadelphia, PA 19103

NSPI-National Spa and Pool Institute, 2111 Eisenhower Avenue, Alexandria, VA 22314

SECTION AG 108
STANDARDS

AG 108.1 General.

ANSI/NSPI

ANSI/NSPI-3 Standard for Permanently Installed Residential Spas ..... AG 104.1

ANSI/NSPI-4 Standard for Above-ground/On-ground Residential Swimming Pools. ..... AG 103.2

ANSI/NSPI-5 Standard for Residential In-ground Swimming Pools. ..... AG 103.1

ANSI/NSPI-6 Standard for Residential Portable Spas. ..... AG l04.2

ASTM

ASTM F 1346-91 Standard Performance Specifications for Safety Covers and Labeling Requirements for

All Covers for Swimming Pools, Spas and Hot Tubs. ..... AG 105.2, AG l05.5

Further, Article I, **Section 1.04**, Amendments, Additions and Deletions, **Subsection (E)**, is hereby amended so that said subsection reads as follows:

E. The amendment of the following I.E.C.C. provisions:

(1) The amendment of I.E.C.C. Section 101.4, entitled Compliance., amended to read as follows:

101.4 Compliance. Compliance with this code shall be determined in accordance with Sections 101.4.1, 101.4.2, or 101.4.3.

(2) The addition of I.E.C.C. Section 101.4.3 entitled Alternative compliance., to read as follows:

101.4.3. Alternative compliance. A building certified by a national, state, or local accredited energy efficiency program and determined by the Energy Systems Laboratory to be in compliance with the energy efficiency requirements of this section may, at the option of the Code Official, be considered in compliance. The United States Environmental Protection Agency's Energy Star Program certification of energy code equivalency shall be considered in compliance.

(3) The amendment of I.E.C.C. Section 302, Table 302.1, entitled Exterior Design Conditions., to change the table and footnote "a" to read as follows:

CONDITION	**VALUE**
Winter [a], design dry-bulb (^{o}F) (99.6%)	17
Summer [a], design dry-bulb (^{o}F) (0.4%)	100
Summer [a], design wet-bulb (^{o}F) (0.4%)	78
Degree days heating [b]	2407
Degree days cooling [b]	2603
Climate zone [c]	5B

a. These values are from ASHRAE Handbook of Fundamentals for Dallas/Ft. Worth International Airport 99.6% Winter DB, 0.4% Summer DB, and 0.4%

Summer WB; and from Local Climatological Data for Dallas-Ft. Worth published by the National Climatic Data Center, National Oceanic and Atmospheric Administration. These values are for the purpose of providing a uniform basis of requirements for North Central Texas. This will not preclude licensed professionals from submitting design analyses based on site measurements or published data more specific to the building site. Adjustments shall be permitted to reflect local climates which differ from the tabulated values, or local weather experience determined by the code official.

(4) The amendment of I.E.C.C. Section 502.1.1, entitled Moisture control., by revising Exception 2 to read as follows:

2. Buildings located in Climate Zones 5b.

(5) The amendment of I.E.C.C. Section 502.1.5, entitled Fenestration solar heat gain coefficient., by adding the following exceptions:

Exceptions:

1. Any glazing facing within 45 degrees of true north;
2. Any glazing facing within 45 degrees of true south which is shaded along its full width by a permanent overhang with a projection factor of 0.3 or greater.
3. Any fenestration with attached screens where the screens have a rated shading coefficient of .6 or less.

(6) The amendment of Section 502.2, Table 502.2, entitled Heating and cooling criteria., to revise the table, footnote "a" and add footnote "g" to read as follows:

Table 502.2[a,g]
HEATING AND COOLING CRITERIA

Element	Mode	Type A-1 Residential Buildings U_o	Type A-2 Residential Buildings U_o
Walls	Heating or cooling	0.15	0.22

Roof/ceiling	Heating or cooling	0.03	0.03
Floors over unheated spaces	Heating or cooling	0.05	0.05
Heated slab on grade	Heating	R-value = 6	R-value = 6
Unheated slab on grade	Heating	R-value = 0	R-value = 0
Basement wall	Heating or cooling	U-factor = 0.15	U-factor = 0.15
Crawl space wall	Heating or cooling	U-factor = 0.15	U-factor = 0.15

a. The above values have been determined for all counties in the North Central Texas Council of Governments region.

(Exceptions b-g to remain the same.)

g. These requirements apply only to the boundaries of conditioned space. Air conditioning equipment is recommended, but not required, to be located within the conditioned space in North Central Texas zones.

(7) The amendment of I.E.C.C. Section 502.2, Figures 502.2(1-6), entitled Residential-Component Performance Approach., by deleting them in their entirety.

(8) The amendment of Section 502.2, Figure 502.2(7) entitled Termite Infestation Probability Map., by adding a note to read as follows:

All counties within the North Central Texas Council of Governments region are designated as within the area of very heavy termite infestation probability for purpose of uniform interpretation of this requirement.

(9) The amendment of Section 502.2.2, entitled Compliance by total building envelope performance., by adding a second paragraph as follows:

A building demonstrating envelope compliance at least 10% better than code may utilize R6 duct insulation in both supply and return air ducts in

lieu of the insulation required by Table 503.3.3.3.

(10) The amendment of Section 502.2.4, Compliance by Prescriptive Specification on an Individual Component Basis., by deleting the references to Tables 502.2.4 (3-9).

(11) The deletion of prescriptive Tables 502.2.4(3-9) and the replacement of Tables 502.2.4(1) and 502.2.4(2) with the following tables:

Table 502.2.4(1
Prescriptive Building Envelope Requirements, Detached One and Two-Family Dwellings, Residential Buildings, Based on Window Area as a Percent of Gross Exterior Wall Area (for zones 5b and 6b)

% Glazing	Maximum	Minimum					
	Glazing U-factor	Ceiling R-value	Exterior wall R-value	Floor R-value	Basement wall R-value	Slab perimeter R-value and depth	Crawl space wall R-value
≤8%	0.70	R-26	R-11	R-11	R-5	R-0	R-6
≤12%	0.65	R-26	R-13	R-11	R-5	R-0	R-5
≤15%	0.65	R-30	R-13	R-11	R-6	R-0	R-7
≤18%	0.52	R-30	R-13	R-19	R-6	R-0	R-7
≤20%	0.50	R-38	R-13	R-19	R-6	R-0	R-7
≤25%	0.46	R-38	R-16	R-19	R-6	R-0	R-7

Table 502.2.4(2)
Prescriptive Building Envelope Requirements, Detached One and Two-Family Dwellings, Based on Window Area as a Percent of Gross Exterior Wall Area

% Glazing	**Maximum**	**Minimum**					
	Glazing U-factor	**Ceiling R-value**	**Exterior wall R-value**	**Floor R-value**	**Basement wall R-value**	**Slab perimeter R-value and depth**	**Crawl space wall R-value**
≤20%	0.55	R-30	R-13	R-11	R-5	R-0	R-6
≤25%	0.55	R-30	R-13	R-11	R-5	R-0	R-5
≤30%	0.47	R-38	R-13	R-19	R-7	R-0	R-8

(12) The amendment of Table 503.3.3.1 entitled MINIMUM PIPE INSULATION (thickness in inches) to amend footnote “a” to read as follows:

a. For piping lengths in excess of five (5) feet exposed to outdoor air, increase the insulation thickness by 0.5 inch.

(13) The amendment of Table 503.3.3.3 entitled MINIMUM DUCT INSULATION[a] to add footnote “e” as follows:

e. See Section 502.2.2

(14) The amendment of Section 503.3.3.4.3 entitled Sealing required., by changing the first sentence to read as follows:

503.3.3.4.3 Sealing required. All joints, longitudinal and transverse seams, and connections in ductwork, shall be made substantially airtight by means of welds, gaskets, mastics (adhesives), mastic-plus-embedded-fabric systems or tapes or other approved closure systems. Tapes and mastics used to seal ductwork shall be listed and labeled in accordance with UL 181A or UL 181B. Duct connections to flanges of air distribution system equipment shall be sealed and mechanically fastened. Unlisted duct tape is not permitted as a sealant on any metal ducts.

(15) The amendment of Section 602.1.6 entitled Slab-on-grade floors., by deleting the last sentence of the exception to read as follows:
Exception: Slab perimeter insulation is not required for unheated slabs in areas of very heavy termite infestation probability as shown in Figure 502.2(7).

(16) The amendment of Section 602.2 entitled Maximum solar heat gain coefficient for fenestration products., by adding the following exceptions:

Exceptions:

1. Any glazing facing within 45 degrees of true north;
2. Any glazing facing within 45 degrees of true south which is shaded along its full width by

a permanent overhang with a projection factor of 0.3 or greater.

3. Any fenestration with attached screens where the screens have a rated shading coefficient of .6 or less.

(17) The amendment of Section 802.2; Tables 802.2 (1-4), and the deletion of Tables 802.2 (5-37) in their entirety:

TABLE 802.2(1)
BUILDING ENVELOPE REQUIREMENTS

WINDOW AND GLAZED DOOR AREA 10 PERCENT OR LESS OF ABOVE-GRADE WALL AREA			
ELEMENT	**CONDITION/VALUE (Zones 5B,6B)**		
Skylights (*U*-factor)	1		
Slab or below-grade wall (*R*-value)	R-0		
Windows and glass doors	**SHGC**		***U*-factor**
PF < 0.25	Any		Any
0.25 ≤ PF < 0.50	Any		Any
PF ≥ 0.50	Any		Any
Roof assemblies (*R*-value)	**Insulation between framing**		**Continuous insulation**
All-wood joist/truss	R-19		R-16
Metal joist/truss	R-25		R-17
Concrete slab or deck	NA		R-16
Metal purlin with thermal block	R-25		R-17
Metal purlin without thermal block	***X***		R-17
Floors over outdoor air or unconditioned space (*R*-value)	**Insulation between framing**		**Continuous insulation**
All-wood joist/truss	R-11		R-6
Metal joist/truss	R-11		R-6
Concrete slab or deck	NA		R-6
Above-grade walls (*R*-value)	**No framing**	**Metal framing**	**Wood framing**
Framed			
R-value cavity	NA	R-11	R-11
R-value continuous	NA	R-0	R-0
CMU, ≥ 8 in., with integral insulation			
R-value cavity	NA	R-0	R-0
R-value continuous	R-0	R-0	R-0
Other masonry walls			
R-value cavity	NA	R-0	R-0
R-value continuous	R-0	R-0	R-0

TABLE 802.2(2)
BUILDING ENVELOPE REQUIREMENTS

WINDOW AND GLAZED DOOR AREA OVER 10 PERCENT BUT NOT GREATER THAN 25 PERCENT OF ABOVE-GRADE WALL AREA			
ELEMENT	**CONDITION/VALUE**		
Skylights (*U*-factor)	1		
Slab or below-grade wall (*R*-value)	R-0		
Windows and glass doors	**SHGC**		***U*-factor**
PF < 0.25	0.6		Any
0.25 ≤ PF < 0.50	0.7		Any
PF ≥ 0.50	Any		Any
Roof assemblies (*R*-value)	**Insulation between framing**		**Continuous insulation**
All-wood joist/truss	R-25		R-19
Metal joist/truss	R-25		R-20
Concrete slab or deck	NA		R-19
Metal purlin with thermal block	R-30		R-20
Metal purlin without thermal block	X		R-20
Floors over outdoor air or unconditioned space (*R*-value)	**Insulation between framing**		**Continuous insulation**
All-wood joist/truss	R-11		R-6
Metal joist/truss	R-11		R-6
Concrete slab or deck	NA		R-6
Above-grade walls (*R*-value)	**No framing**	**Metal framing**	**Wood framing**
Framed			
R-value cavity	NA	R-11	R-11
R-value continuous	NA	R-0	R-0
CMU, ≥ 8 in., with integral insulation			
R-value cavity	NA	R-11	R-11
R-value continuous	R-5	R-0	R-0
Other masonry walls			
R-value cavity	NA	R-11	R-11
R-value continuous	R-5	R-0	R-0

TABLE 802.2(3)
BUILDING ENVELOPE REQUIREMENTS

WINDOW AND GLAZED DOOR AREA OVER 25 PERCENT BUT NOT GREATER THAN 40 PERCENT OF ABOVE-GRADE WALL AREA			
ELEMENT	**CONDITION/VALUE**		
Skylights (*U*-factor)	1		
Slab or below-grade wall (*R*-value)	R-0		
Windows and glass doors	**SHGC**		***U*-factor**
PF < 0.25	0.4		0.7
0.25 ≤ PF < 0.50	0.5		0.7
PF ≥ 0.50	0.6		0.7
Roof assemblies (*R*-value)	**Insulation between framing**		**Continuous insulation**
All-wood joist/truss	R-25		R-19
Metal joist/truss	R-25		R-20
Concrete slab or deck	NA		R-19
Metal purlin with thermal block	R-30		R-20
Metal purlin without thermal block	X		R-20
Floors over outdoor air or unconditioned space (*R*-value)	**Insulation between framing**		**Continuous insulation**
All-wood joist/truss	R-11		R-6
Metal joist/truss	R-11		R-6
Concrete slab or deck	NA		R-6
Above-grade walls (*R*-value)	**No framing**	**Metal framing**	**Wood framing**
Framed			
R-value cavity	NA	R-11	R-11
R-value continuous	NA	R-0	R-0
CMU, ≥ 8 in., with integral insulation			
R-value cavity	NA	R-11	R-11
R-value continuous	R-5	R-0	R-0
Other masonry walls			
R-value cavity	NA	R-11	R-11
R-value continuous	R-5	R-0	R-0

TABLE 802.2(4)

BUILDING ENVELOPE REQUIREMENTS

WINDOW AND GLAZED DOOR AREA OVER 40 PERCENT BUT NOT GREATER THAN 50 PERCENT OF ABOVE-GRADE WALL AREA			
ELEMENT	**CONDITION/VALUE**		
Skylights (*U*-factor)	1		
Slab or below-grade wall (*R*-value)	R-0		
Windows and glass doors	**SHGC**	***U*-factor**	
PF < 0.25	0.4	0.7	
0.25 ≤ PF < 0.50	0.5	0.7	
PF ≥ 0.50	0.6	0.7	
Roof assemblies (*R*-value)	**Insulation between framing**	**Continuous insulation**	
All-wood joist/truss	R-25	R-19	
Metal joist/truss	R-25	R-20	
Concrete slab or deck	NA	R-19	
Metal purlin with thermal block	R-30	R-20	
Metal purlin without thermal block	R-38	R-20	
Floors over outdoor air or unconditioned space (*R*-value)	**Insulation between framing**	**Continuous insulation**	
All-wood joist/truss	R-11	R-6	
Metal joist/truss	R-11	R-6	
Concrete slab or deck	NA	R-6	
Above-grade walls (*R*-value)	**No framing**	**Metal framing**	**Wood framing**
Framed			
R-value cavity	NA	R-13	R-11
R-value continuous	NA	R-3	R-0
CMU, ≥ 8 in., with integral insulation			
R-value cavity	***NA***	R-11	R-11
R-value continuous	R-5	R-0	R-0
Other masonry walls			
R-value cavity	NA	R-11	R-11
R-value continuous	R-5	R-0	R-0

(18) The amendment to TABLE 802.2 (2) entitled BUILDING ENVELOPE REQUIREMENTS [a through e], WINDOW AND GLAZED DOOR AREA GREATER THAN 10 PERCENT BUT NOT GREATER THAN 25 PERCENT OF ABOVE-GRADE WALL AREA; TABLE 802.2 (3) entitled BUILDING ENVELOPE REQUIREMENTS [a through e], WINDOW AND GLAZED DOOR AREA GREATER THAN 25 PERCENT BUT NOT GREATER THAN 40 PERCENT OF

ABOVE-GRADE WALL AREA; and TABLE 802.2 (4) BUILDING ENVELOPE REQUIREMENTS [a through e], WINDOW AND GLAZED DOOR AREA GREATER THAN 40 PERCENT BUT NOT GREATER THAN 50 PERCENT OF ABOVE-GRADE WALL AREA, to add footnote "f" to SHGC column heading as follows:

f. Minimum SHGC requirements do not apply to glazing as follows:

Any glazing facing within 45 degrees of true north.
Any glazing facing within 45 degrees of true south which is shaded along its full width by a permanent overhand with a projection factor of 0.30 or greater.
Any glazing with permanent attached screens where the screens have a rated shading coefficient of 0.60 or less.

(19) The amendment of I.E.C.C. Section 805.2.1, entitled Interior Lighting Controls., to read as follows:

805.2.1 Interior lighting controls. Each area enclosed by walls or floor-to-ceiling partitions shall have at least one manual control for the lighting serving that area. The required controls shall be located within the area served by the controls or be a remote switch that identifies the lights served and indicates their status. Large spaces shall have a separate switch or control for each 2500 square feet of floor area.

(20) The deletion of Figure 902.1(43) entitled TENNESSEE; Figure 902.1(45) entitled UTAH; Figure 902.1(46) entitled VERMONT; FIGURE 902.1(47) entitled VIRGINIA; FIGURE 902.1(48) entitled WASHINGTON; FIGURE 902.1(49) entitled WEST VIRGINIA; FIGURE 902.1(50) entitled WISCONSIN; and FIGURE 902.1(51) entitled WYOMING.

(21) The amendment of Chapter 9, entitled Referenced Standards., by replacing to read as follows:

ASHRAE/IES -- 99 Energy Efficient Design of New Buildings Except Low-Rise Residential Buildings -- 1999 Edition

2.

Any person, firm, corporation, agent or employee thereof who violates any of the provisions of this ordinance shall be guilty of a misdemeanor and upon conviction thereof shall be fined an amount not to exceed Two Thousand and No/100 Dollars ($2000) for each offense. Each day that a violation is permitted to exist shall constitute a separate offense.

3.

This ordinance shall be and is hereby declared to be cumulative of all other ordinances of the City of Arlington, and this ordinance shall not operate to repeal or affect any of such other ordinances except insofar as the provisions thereof might be inconsistent or in conflict with the provisions of this ordinance, in which event such conflicting provisions, if any, in such other ordinance or ordinances are hereby repealed.

4.

If any section, subsection, sentence, clause or phrase of this ordinance is for any reason held to be unconstitutional, such holding shall not affect the validity of the remaining portions of this ordinance.

5.

All of the regulations provided in this ordinance are hereby declared to be governmental and for the health, safety and welfare of the general public. Any member of the City Council or any City official or employee charged with the enforcement of this ordinance, acting for the City of Arlington in the discharge of his/her duties, shall not thereby render himself/herself personally liable; and he/she is hereby relieved from all personal liability for any damage that might accrue to persons or property as a result of any act required or permitted in the discharge of his/her said duties.

6.

Any violation of this ordinance can be enjoined by a suit filed in the name of the City of Arlington in a court of competent jurisdiction, and this remedy shall be in addition to any penal provision in this ordinance or in the Code of the City of Arlington.

7.

The caption and penalty clause of this ordinance shall be published in a newspaper of general circulation in the City of Arlington, in compliance with the provisions of Article VII, Section 15, of the City Charter. Further, this ordinance may be published in pamphlet form and shall be admissible in such form in any court, as provided by law.

8.

This ordinance shall become effective November 1, 2005.

PRESENTED AND GIVEN FIRST READING on the **9th** day of **August, 2005**, at a regular meeting of the City Council of the City of Arlington, Texas; and GIVEN SECOND READING, passed and approved on the **23rd** day of **August, 2005**, by a vote of **9** ayes and **0** nays at a regular meeting of the City Council of the City of Arlington, Texas.

Publ ied ST 2-20-06 & 2-27-06

Ordinance No. 06-018

An ordinance amending the "Construction" Chapter of the Code of the City of Arlington, Texas, 1987, through the amendment of Article XIII, Outdoor Festivals, Section 13.10, Exception; containing findings and other provisions relating to the foregoing subject; providing for a fine of up to $2,000 for each violation of the ordinance; providing this ordinance be cumulative; providing for severability, governmental immunity, injunctions, publication and an effective date

WHEREAS, major sports complexes tend to have frequent events involving amplified sound, some of which may be classified as outdoor festivals; and

WHEREAS, major sports complexes contribute significantly to the tourist based economy and family entertainment cultural and social quality of life for the residents of the City of Arlington (the "City"); and

WHEREAS, the City Council of the City desires to further the festive image of major sports complexes, to protect public and private investment in major sports complexes, and to promote orderly growth by encouraging outdoor festivals at major sports complexes while protecting nearby residents from excessive noise; and

WHEREAS, the City Council of the City desires to effect certain changes to the "Construction" Chapter of the Code of the City of Arlington, Texas, 1987; NOW THEREFORE

BE IT ORDAINED BY THE CITY COUNCIL OF THE CITY OF ARLINGTON, TEXAS:

1.

That the findings contained in the preamble of this Ordinance are determined to be true and correct and are hereby adopted as a part of this Ordinance.

2.

That the **"Construction"** Chapter of the Code of the City of Arlington, Texas, 1987, is hereby amended through the amendment of **Article XIII**, Outdoor Festivals, by amending **Section 13.10**, Exception, to be and read as follows:

Section 13.10 Exception

The provisions of this Article shall not apply if the location of the event is either (a) one for which a Certificate of Occupancy has already been granted and/or a final inspection, as applicable, has already occurred if the event is not open to the general

public or (b) a major sports complex, as defined in the "Zoning" Chapter of the Code of the City of Arlington.

3.

Any person, firm, corporation, agent or employee thereof who intentionally or knowingly violates any of the provisions of this ordinance shall be guilty of a misdemeanor and upon conviction thereof shall be fined an amount not to exceed **Two Thousand and No/100 Dollars ($2,000.00)** for each offense. Each day that a violation is permitted to exist shall constitute a separate offense.

4.

This ordinance shall be and is hereby declared to be cumulative of all other ordinances of the City of Arlington, and this ordinance shall not operate to repeal or affect any of such other ordinances except insofar as the provisions thereof might be inconsistent or in conflict with the provisions of this ordinance, in which event such conflicting provisions, if any, in such other ordinance or ordinances are hereby repealed.

5.

If any section, subsection, sentence, clause or phrase of this ordinance is for any reason held to be unconstitutional, such holding shall not affect the validity of the remaining portions of this ordinance.

6.

All of the regulations provided in this ordinance are hereby declared to be governmental and for the health, safety and welfare of the general public. Any member of the City Council or any City official or employee charged with the enforcement of this ordinance, acting for the City of Arlington in the discharge of his/her duties, shall not thereby render himself/herself personally liable; and he/she is hereby relieved from all personal liability for any damage that might accrue to persons or property as a result of any act required or permitted in the discharge of his/her said duties.

7.

Any violation of this ordinance can be enjoined by a suit filed in the name of the City of Arlington in a court of competent jurisdiction, and this remedy shall be in addition to any penal provision in this ordinance or in the Code of the City of Arlington.

8.

The caption and penalty clause of this ordinance shall be published in a newspaper of general circulation in the City of Arlington, in compliance with the provisions of Article VII, Section 15, of the City Charter. Further, this ordinance may be published in pamphlet form and shall be admissible in such form in any court, as provided by law.

This ordinance shall become effective upon second publication.

PRESENTED AND GIVEN FIRST READING on the 24th day of January, 2006, at a regular meeting of the City Council of the City of Arlington, Texas; and GIVEN SECOND READING, passed and approved on the 14th day of February, 2006, by a vote of 9 ayes and 0 nays at a regular meeting of the City Council of the City of Arlington, Texas.

ROBERT N. CLUCK, Mayor

ATTEST:

BARBARA G. HEPTIG, City Secretary

APPROVED AS TO FORM:
JAY DOEGEY, City Attorney

BY

Published ST 8-30-06 & 9-4-06

Ordinance No. 06-081

An ordinance amending the "Construction" Chapter of the Code of the City of Arlington, Texas, 1987, through the amendment of Article I, Building Code, Section 1.04, Amendments, Additions and Deletions, Subsection (C)(77), amended Section 2902, Minimum Plumbing Facilities, Subsection 2902.6.1, Hand washing lavatory, and Subsection 2902.6.2, Service sink; and through the amendment of Article XVI, Dangerous Buildings, Section 16.02, Definitions, Subsection (A)(1), and Section 16.10, Notice to Vacate, Violations, Subsection (A), relative to updating the reference to the Community Services Department; providing this ordinance be cumulative; providing for severability; providing for governmental immunity; providing for injunctions; providing for publication and becoming effective ten days after first publication

BE IT ORDAINED BY THE CITY COUNCIL OF THE CITY OF ARLINGTON, TEXAS:

1.

That the **"Construction"** Chapter of the Code of the City of Arlington, Texas, 1987, is hereby amended through the amendment of **Article I,** Building Code, **Section 1.04,** Amendments, Additions and Deletions, **Subsection (C)(77),** amended **Section 2902.6.1**, Hand washing lavatory, relative to updating the reference to the Community Services Department so that said subsection shall be and read as follows:

> **2902.6.1 Hand washing lavatory.** At least one hand washing lavatory shall be provided for use by employees that is accessible from food preparation, food dispensing and warewashing areas. The City of Arlington Community Services Department may require additional hand washing lavatories based on convenience of use by employees.

Further, **Article I,** Building Code, is hereby amended by the amendment of **Section 1.04,** Amendments, Additions and Deletions, **Subsection (C)(77),** amended **Section 2902.6.2**, Service sink, relative to updating the reference to the Community Services Department so that said subsection shall be and read as follows:

> **2902.6.2 Service sink.** In new or remodeled food service establishments, at least one service sink or one floor sink shall be provided so that it is conveniently located for the cleaning of mops or similar wet floor cleaning tools and for the disposal of mop water and similar liquid waste. The City of Arlington Community Services Department shall be the final authority for the approval of the location.

Further, **Article XVI,** Dangerous Buildings, is hereby amended by the amendment of **Section 16.02,** Definitions, **Subsection (A)(1),** relative to updating the

reference to the Community Services Department so that said subsection shall be and read as follows:

1. "Administrator" shall mean the Director of Community Services or his designee.

Further, **Article XVI,** Dangerous Buildings, is hereby amended by the amendment of **Section 16.10,** Notice to Vacate; Violations, **Subsection (A),** relative to updating the reference to the Community Services Department so that said subsection shall be and read as follows:

A. Every notice to vacate shall be posted at or upon each entrance and exit of the building and shall be in substantially the following form:

DO NOT ENTER
UNSAFE TO OCCUPY

It is a misdemeanor to occupy this building,
or to remove or deface this notice.

Director of Community Services
City of Arlington

The Notice to Vacate shall specify the conditions which necessitate the posting and recite the emergency or shall identify the order to vacate and state where a complete copy of the order may be obtained.

2.

This ordinance shall be and is hereby declared to be cumulative of all other ordinances of the City of Arlington, and this ordinance shall not operate to repeal or affect any of such other ordinances except insofar as the provisions thereof might be inconsistent or in conflict with the provisions of this ordinance, in which event such conflicting provisions, if any, in such other ordinance or ordinances are hereby repealed.

3.

If any section, subsection, sentence, clause or phrase of this ordinance is for any reason held to be unconstitutional, such holding shall not affect the validity of the remaining portions of this ordinance.

4.

All of the regulations provided in this ordinance are hereby declared to be governmental and for the health, safety and welfare of the general public. Any member of the City Council or any City official or employee charged with the enforcement of this ordinance, acting for the City of Arlington in the discharge of his/her duties, shall not

thereby render himself/herself personally liable; and he/she is hereby relieved from all personal liability for any damage that might accrue to persons or property as a result of any act required or permitted in the discharge of his/her said duties.

5.

Any violation of this ordinance can be enjoined by a suit filed in the name of the City of Arlington in a court of competent jurisdiction, and this remedy shall be in addition to any penal provision in this ordinance or in the Code of the City of Arlington.

6.

The caption of this ordinance shall be published in a newspaper of general circulation in the City of Arlington, in compliance with the provisions of Article VII, Section 15, of the City Charter. Further, this ordinance may be published in pamphlet form and shall be admissible in such form in any court, as provided by law.

7.

This ordinance shall become effective ten (10) days after first publication as described above.

PRESENTED AND GIVEN FIRST READING on the 8th day of August, 2006, at a regular meeting of the City Council of the City of Arlington, Texas; and GIVEN SECOND READING, passed and approved on the 22nd day of August, 2006, by a vote of 9 ayes and 0 nays at a regular meeting of the City Council of the City of Arlington, Texas.

ROBERT N. CLUCK, Mayor

ATTEST:

BARBARA G. HEPTIG, City Secretary

APPROVED AS TO FORM:
JAY DOEGEY, City Attorney

BY

PUBLISHED ST 12-24-07 & 12-31-07

Ordinance No. 07-096

An ordinance amending the "Construction" Chapter of the Code of the City of Arlington, Texas, 1987, through the amendment of Article XVI, Dangerous Buildings, Section 16.08, Liens for Penalties and Expenses, Subsection (A), relative to specifying fees; Section 16.09, Notice and Collection of Penalty and Expenses, Subsection (A), relative to specifying fees; Section 16.12, Swimming Pool Enclosures, Subsection (D), relative to specifying fees; Article XVII, Additional Authority to Secure Building, Section 17.06, Liens and Collection of Expenses, relative to specifying fees; Article XVIII, Performance of Work and Recovery of Cost, Section 18.02, Account of Expense, Filing of Report: Contents, relative to specifying fees; providing for a fine of up to $2,000 for each violation of the ordinance; providing this ordinance be cumulative; providing for severability; providing for governmental immunity; providing for injunctions; providing for publication and becoming effective ten days after first publication

BE IT ORDAINED BY THE CITY COUNCIL OF THE CITY OF ARLINGTON, TEXAS:

1.

That the **"Construction"** Chapter of the Code of the City of Arlington, Texas, 1987, is hereby amended through the amendment of **Article XVI,** Dangerous Buildings, by the amendment of **Section 16.08, Liens for Penalties and Expenses, Subsection (A),** so that said subsection shall be and read as follows:

A. If pursuant to this Chapter the City assesses a civil penalty or incurs expenses including the Administrative Fee as set by resolution of City Council for City administrative expenses, the City may assess the expenses or penalty on and place a lien against the land on which the building was located, unless the land is a homestead protected by the Texas Constitution.

Further, **Article XVI, Section 16.09,** Notice and Collection of Penalty and Expenses, **Subsection (A),** is hereby amended so that said subsection shall be and read as follows:

A. If the City incurs expenses under this Chapter including the Administrative Fee as set by resolution of City Council for City administrative expenses, the Administrator shall cause a statement to be sent to the owner, setting forth the amount of the expenses and the interest accrued to date. The Administrator may

thereafter cause an annual statement to be sent to the owner until the expenses and interest are paid in full.

Further, **Article XVI**, **Section 16.12**, Swimming Pool Enclosures, **Subsection (D)**, is hereby amended so that said subsection shall be and read as follows:

D. If the City incurs expenses under this Article including the Administrative Fee as set by resolution of City Council for City administrative expenses, the Administrator may assess the expenses on, and the City has a lien against the property on which the swimming pool or the enclosure or fence is situated, unless it is a homestead as protected by the Texas Constitution. The lien is extinguished if the property owner or another person having an interest in the legal title to the property reimburses the City for the expenses. The lien arises and attaches to the property at the time the lien is recorded in the office of the Tarrant County Clerk. The lien must contain the name and address for the owner if that information can be determined with a reasonable effort, a legal description of the real property on which the swimming pool or the enclosure or fence is situated, the amount of expenses incurred by the City, and the balance due. The lien is a privileged lien subordinate only to tax liens and all previously recorded bona fide mortgage liens attached to the real property to which the City's lien attaches.

Further, **Article XVII**, Additional Authority to Secure Building, **Section 17.06,** Liens and Collection of Expenses, is hereby amended so that said section shall be and read as follows:

Section 17.06 Liens and Collection of Expenses

If the City incurs expenses under this Chapter including the Administrative Fee as set by resolution of City Council for City administrative expenses, the City may assess the expenses on and place a lien against the land on which the building is located, in accordance with this Chapter.

Further, **Article XVIII**, Performance of Work and Recovery of Cost, **Section 18.02**, Account of Expense, Filing of Report: Contents, is hereby amended so that said section shall be and read as follows:

Section 18.02 Account of Expense, Filing of Report: Contents

The Administrator shall keep an itemized account of the expense incurred by this jurisdiction for the work to repair, remove, secure, vacate or to demolish any building pursuant to the provisions of this Chapter. Upon the completion of the work, the Administrator shall prepare a report specifying the work done, the itemized and total cost of the work including the Administrative Fee as set by resolution of City Council for City

administrative expenses, a description of the real property upon which the building or structure is or was located and the names and addresses of the persons entitled to notice.

2.

Any person, firm, corporation, agent or employee thereof who intentionally or knowingly violates any of the provisions of this ordinance shall be guilty of a misdemeanor and upon conviction thereof shall be fined an amount not to exceed Two Thousand and No/100 Dollars ($2,000) for each offense. Each day that a violation is permitted to exist shall constitute a separate offense.

3.

This ordinance shall be and is hereby declared to be cumulative of all other ordinances of the City of Arlington, and this ordinance shall not operate to repeal or affect any of such other ordinances except insofar as the provisions thereof might be inconsistent or in conflict with the provisions of this ordinance, in which event such conflicting provisions, if any, in such other ordinance or ordinances are hereby repealed.

4.

If any section, subsection, sentence, clause or phrase of this ordinance is for any reason held to be unconstitutional, such holding shall not affect the validity of the remaining portions of this ordinance.

5.

All of the regulations provided in this ordinance are hereby declared to be governmental and for the health, safety and welfare of the general public. Any member of the City Council or any City official or employee charged with the enforcement of this ordinance, acting for the City of Arlington in the discharge of his/her duties, shall not thereby render himself/herself personally liable; and he/she is hereby relieved from all personal liability for any damage that might accrue to persons or property as a result of any act required or permitted in the discharge of his/her said duties.

6.

Any violation of this ordinance can be enjoined by a suit filed in the name of the City of Arlington in a court of competent jurisdiction, and this remedy shall be in addition to any penal provision in this ordinance or in the Code of the City of Arlington.

7.

The caption and penalty clause of this ordinance shall be published in a newspaper of general circulation in the City of Arlington, in compliance with the

provisions of Article VII, Section 15, of the City Charter. Further, this ordinance may be published in pamphlet form and shall be admissible in such form in any court, as provided by law.

8.

This ordinance shall become effective ten (10) days after first publication as described above.

PRESENTED AND GIVEN FIRST READING on the 4th day of December, 2007, at a regular meeting of the City Council of the City of Arlington, Texas; and GIVEN SECOND READING, passed and approved on the 18th day of December, 2007, by a vote of 9 ayes and 0 nays at a regular meeting of the City Council of the City of Arlington, Texas.

ROBERT N. CLUCK, Mayor

ATTEST:

CITY OF ARLINGTON
City of Arlington Texas
ARLINGTON, TEXAS

PARKER HARRIS, Acting City Secretary

APPROVED AS TO FORM:
JAY DOEGEY, City Attorney

BY

PUBLISHED ST 10-02-08 & 10-03-08

Ordinance No. 08-090

An ordinance amending the "Construction" Chapter of the Code of the City of Arlington, Texas, 1987, through the amendment of Article I, Building Code, Section 1.06, Construction Prohibited in Private Drainage and/or Public Easements, Subsection (B), related to fees for easement use agreements; through the amendment of Article IV, Registration, Permits and Inspections, Section 4.02, Permits Required, by the addition of regulations related to excavation, grading, and filling; and Section 4.14, Certificate of Occupancy, Subsections (C), (D), and (F), related to certificates of occupancy; and the amendment of Article VII, Signs, Section 7.10, Temporary Signs Near Polling Places, Subsection (A), related to temporary signs near polling places; providing for a fine of up to $2,000.00 for each offense in violation of the ordinance; providing this ordinance be cumulative, providing for severability, governmental immunity, injunctions, publication and an effective date

WHEREAS, the Arlington City Council has determined that it is in the best interest of the public and in support of the health, safety, morals, and general welfare of the citizens that this amendment to the Construction Chapter be approved; NOW THEREFORE

BE IT ORDAINED BY THE CITY COUNCIL OF THE CITY OF ARLINGTON, TEXAS:

1.

That the **"Construction"** Chapter of the Code of the City of Arlington, Texas, 1987, is hereby amended through the amendment of **Article I**, Building Code, **Section 1.06**, Construction Prohibited in Private Drainage and/or Public Easements, Subsection (B), so that hereafter Subsection B shall read as follows:

B. In cases where improvements other than those listed in Subsection (A) above are proposed in public easements, application shall be made to the Building Official for the execution of an Easement Use Agreement. If the improvement is approved, an easement use agreement allowing the encroachment will be provided upon payment of an administrative fee in the amount set by City Council resolution. If, in the determination of the Building Official after conferring with the other appropriate departments of the City of Arlington, such Easement Use Agreement cannot be executed, the Building Official will refer the request to the Building Code Board of Appeals for final determination upon receipt of an appeal from the applicant.

2.

Further, **Article IV**, Registration, Permits and Inspections, **Section 4.02**, Permits Required, is hereby amended so that said Section shall read as follows:

Section 4.02 Permits Required

It shall be unlawful for any Registrant to erect, construct, enlarge, alter, repair, move, improve, remove, convert or demolish any building, sign or structure in the City of Arlington, or do the same to the pavement of properties other than R-3 occupancies, or to excavate, grade, or fill property, or cause the same to be done, without first obtaining a separate building permit for such work from the Building Official.

A permit shall be issued only to a Registrant meeting the conditions of Section 4.01 above, and only after all other requirements defined in this article have been accomplished.

3.

Further, **Article IV** is hereby amended by the amendment of **Section 4.14**, Certificate of Occupancy, Subsections (C), (D), and (F), so that hereafter said subsections shall read as follows:

C. Certificate Issued. The Building Official shall issue a Certificate of Occupancy upon a finding that the premises complies with the Building Code, provisions of the "Zoning" Chapter of the Code and all other applicable development regulations of the City of Arlington. For new structures or when the occupant is of a different character of occupancy or use from the previous certificate holder, the Building Inspections Division shall make an inspection. Where no change in character of occupancy is proposed for a structure previously granted a Certificate of Occupancy, no inspection is necessary unless specifically required by the Building Official. In the event that a tenant space is being altered, enlarged or reduced in size, or if the Building Official believes that the previous tenant altered the space without benefit of permits, an inspection may be required prior to the occupancy. Other City departments may require inspections prior to the granting of a Certificate of Occupancy. Issuance of a certificate of occupancy shall not be construed as an approval of a violation of the provisions of this code or of other ordinances of the jurisdiction.

An applicant for a Sexually Oriented Business as required by the Sexually Oriented Business Chapter of the City Code must first obtain a Certificate of Occupancy for a Sexually Oriented Business from the Building Official. The Building Official shall issue or deny a Certificate of Occupancy to a Sexually Oriented Business not more than sixty (60) business days subsequent to the date of the applicant's submission of such application to the Building Official. Such

application for a Certificate of Occupancy shall be deemed approved if not approved or denied within such time period.

The Certificate of Occupancy shall contain:

1. The address of the building;

2. The name, address and telephone number of the occupant of said premises, building or structure;

3. The allowable use for which the certificate is issued;

4. The zoning district in which the use is located; and

5. Any conditions of the granting of the certificate.

D. Temporary Certificate. A temporary Certificate of Occupancy may be issued by the Building Official for the use of a portion or portions of a building, structure, or site prior to the completion of the entire building, structure or site improvements but only if that portion or portions can be occupied safely. The Building Official shall set a time period during which the temporary certificate of occupancy is valid.

F. Revocation. The Building Official may, in writing, suspend or revoke a Certificate of Occupancy or a temporary Certificate of Occupancy issued under the provisions of this Code whenever the certificate is issued in error, or on the basis of incorrect information supplied, or when it is determined that the building or structure or portion thereof is in violation of any ordinance or regulation or any provision of this Code. Upon suspension or revocation of a Certificate of Occupancy, the Building Official shall have the authority to disconnect, or to order the electricity supply agency to disconnect, all electric service to any premises affected by the revoked or suspended Certificate of Occupancy.

4.

Further, **Article VII**, Signs, **Section 7.10**, Temporary Signs Near Polling Places, Subsection (A), is hereby amended so that hereafter said Subsection shall read as follows:

A. No temporary sign shall be placed, erected, constructed or maintained at a size greater than six (6) square feet in the area within the property lines of the property in which a polling place is located during the voting period, except as otherwise provided by state law. "Voting period" means the period beginning when a poll

opens for early voting and election day voting and ending when the poll closes or the last voter has voted, whichever is later.

5.

Any person, firm, corporation, agent or employee thereof who violates any of the provisions of this ordinance shall be guilty of a misdemeanor and upon conviction thereof shall be fined an amount not to exceed Two Thousand Dollars and No Cents ($2,000.00) for each offense. Each day that a violation is permitted to exist shall constitute a separate offense.

6.

This ordinance shall be and is hereby declared to be cumulative of all other ordinances of the City of Arlington; and this ordinance shall not operate to repeal or affect any of such other ordinances except insofar as the provisions thereof might be inconsistent or in conflict with the provisions of this ordinance, in which event such conflicting provisions, if any, in such other ordinance or ordinances are hereby repealed.

7.

If any section, subsection, sentence, clause or phrase of this ordinance is for any reason held to be unconstitutional, such holding shall not affect the validity of the remaining portions of this ordinance.

8.

All of the regulations provided in this ordinance are hereby declared to be governmental and for the health, safety and welfare of the general public. Any member of the City Council or any City official or employee charged with the enforcement of this ordinance, acting for the City of Arlington in the discharge of his/her duties, shall not thereby render himself/herself personally liable; and he/she is hereby relieved from all personal liability for any damage that might accrue to persons or property as a result of any act required or permitted in the discharge of his/her said duties.

9.

Any violation of this ordinance can be enjoined by a suit filed in the name of the City of Arlington in a court of competent jurisdiction, and this remedy shall be in addition to any penal provision in this ordinance or in the Code of the City of Arlington.

10.

The caption and penalty clause of this ordinance shall be published in a newspaper of general circulation in the City of Arlington, Texas, in compliance with the provisions of Article VII, Section 15, of the City Charter. Further, this ordinance may be

published in pamphlet form and shall be admissible in such form in any court, as provided by law.

11.

This ordinance shall become effective upon second publication.

PRESENTED AND GIVEN FIRST READING on the 16th day of September, 2008, at a regular meeting of the City Council of the City of Arlington, Texas; and GIVEN SECOND READING, passed and approved on the 30th day of September, 2008, by a vote of 8 ayes and 0 nays at a regular meeting of the City Council of the City of Arlington, Texas.

ROBERT N. CLUCK, Mayor

ATTEST:

KAREN BARLAR, City Secretary

APPROVED AS TO FORM:
JAY DOEGEY, City Attorney

BY Kathy Zbolich

5-12-09
5-18-09

Ordinance No. 09-024

An ordinance amending the "Construction" Chapter of the Code of the City of Arlington, Texas, 1987, through the amendment of Article I, Building Code, Section 1.03, Code Defined; Rule of Construction, related to residential construction; Section 1.04, Amendments, Additions and Deletions, Subsection (C)(74), related to retaining wall standards; and Subsection 1.04(D), by the addition of Subsection (43.5), related to corrugated stainless steel tubing; Section 1.06, Construction Prohibited in Private Drainage and/or Public Easements, related to easement use agreements; through the amendment of Article IV, Registration, Permits and Inspections, Sections 4.01(I), 4.02, 4.05, 4.07, 4.08, and 4.11, and the addition of Sections 4.02.5, 4.05.5, and 4.11.5, related to homeowner registration, site plans, posting of building permit at the job site, expiration of applications, plans, and permits, revocation of permits, and other miscellaneous minor changes; through the amendment of Article XVI, Dangerous Buildings, Section 16.02, Definitions, by the amendment of the definition of "Administrator", and the addition of the definition of "Hearing Authority"; by the addition of Section 16.13, Requiring Repair, Removal, or Demolition of Structure, relative to dangerous structures; providing for a fine of up to $2,000.00 for each offense in violation of the ordinance; providing this ordinance be cumulative, providing for severability, governmental immunity, injunctions, publication and an effective date

BE IT ORDAINED BY THE CITY COUNCIL OF THE CITY OF ARLINGTON, TEXAS:

1.

That the **"Construction"** Chapter of the Code of the City of Arlington, Texas, 1987, is hereby amended through the amendment of **Article I**, Building Code, **Section 1.03**, Code Defined; Rule of Construction, so that hereafter said section shall read as follows:

Section 1.03 Code Defined; Rule of Construction

This Building Code shall include all of the provisions of the I.B.C., I.R.C. and I.E.C.C. as adopted by Section 1.02 above and all other provisions contained herein. In

the event a conflict is determined to exist between said I.B.C., I.R.C. and I.E.C.C. as adopted and the other provisions of this Chapter, the provisions of this Chapter control. Items regulated by permit located on residential lots that are not specifically referenced in the I.R.C. are regulated by the I.B.C.

Further, **Section 1.04**, Amendments, Additions and Deletions, Subsection (C)(74), is hereby amended so that hereafter said subsection shall read as follows:

(74) The amendment of Section 1610.1, entitled General., by the addition of the following second paragraph:

Retaining walls exceeding four feet (4') in developed height (the height from the base of the foundation to the top of the wall) at any point shall be designed by a professional engineer. A wall built in tiers shall be considered a single wall in developed height when the base of the upper tier is set back from the base of the lower tier less than one and one-half (1½) times the developed height of the wall section below. Walls supporting an imposed load such as a building, driveway or other permanent construction closer to the wall than one and one-half (1½) times the developed height of the wall shall be designed by a professional engineer.

Further, **Section 1.04**, Subsection (D), is hereby amended by the addition of Subsection (43.5) so that hereafter said subsection shall read as follows:

(43.5) The addition of Section G2415.5.1 (404.5.1), entitled Additional protection of CSST piping. to read as follows:

G2415.5.1 (404.5.1) Additional protection of CSST piping. Where Corrugated Stainless Steel Tubing (CSST) piping is installed in exterior wall cavities, insulated wall cavities and/or insulated roof/ceiling assemblies, the CSST piping must be protected for its entire length with flexible metal conduit (per the UL-1 Standard or its equivalent), Schedule 40 steel pipe, or approved strike plates. The additional protection must extend a minimum of 18 inches (457.2 mm) beyond where the CSST piping exits the wall cavities and/or the roof/ceiling assemblies.

Further, **Article I, Section 1.06**, Construction Prohibited in Private Drainage and/or Public Easements, is hereby amended so that hereafter said section shall read as follows:

Section 1.06 <u>Construction Prohibited in Easements</u>

A. Regardless of materials, manner of construction or unique characteristics of land, it shall be unlawful for any person, firm or corporation to cause or permit the installation, revision or relocation of any construction improvement where any part of such improvement is to be located in an easement, except as provided in this Section.

B. In cases where improvements are proposed in any public easement the City has a right to use, application shall be made to the Building Official for the execution of an Easement Use Agreement. The Building Official shall refer the request to the City Engineer. If the improvement is approved, an easement use agreement allowing the encroachment will be provided upon payment of an administrative fee in the amount set by City Council resolution. Certain minor improvements are permitted without an Easement Use Agreement as provided in the Design Criteria Manual adopted by the City. In cases where improvements are proposed in any other easement, written permission of the owner of the dominant estate, or the beneficiary of the easement, is required prior to construction.

C. The City of Arlington shall not be liable for damages or losses of any kind whatsoever by reason of injury to property or person occasioned by the use of any easement. The City shall have no obligations in regards to the maintenance of any improvements within such easement or rights-of-way. The City shall be defended at the cost and expense of the person placing improvements in any easements or rights-of-way from all claims and demands. The use of any easement in rights-of-way shall be discontinued and improvements removed within 30 days of notification by the City and the cost of the discontinuation and removal of improvements shall be borne by the owner of the improvement. The Building Official or the City Engineer may terminate and/or modify an Easement Use Agreement after review and concurrence of valid and justifiable reasons and/or conditions.

D. The term "improvement" includes, but is not limited to, concrete or asphalt paving, swimming pools, fences, retaining walls, and temporary or permanent buildings. "Improvements" shall not include public or private mailboxes, or poles and boxes necessary for public utility services, or City-owned improvements on City property.

The term "easement" shall include easements for right-of-way, drainage and utilities.

Further, **Article IV**, <u>Registration, Permits and Inspections</u>, **Section 4.01,** <u>Registration</u>, **Subsection (I)**, is hereby amended so that said Subsection shall read as follows:

Exemption for Owner. Except for permits required by Article VIII below, a homeowner's registration shall be required for work to be performed on an existing structure when the person performing the work is the owner of the structure who resides therein as his homestead, and is not assisted by any other person for remuneration. The homeowner shall be termed a Registrant for the purposes of such a project after proper registration. All requirements for permits for the work and all other applicable provisions of this Building Code shall remain in force.

Further, **Article IV, Section 4.02**, Permits Required, is hereby amended so that said Section **and title** shall read as follows:

Section 4.02 Commercial Site Plan and Permits Required

A. It shall be unlawful for any Registrant to erect, construct, enlarge, alter, repair, move, improve, remove, convert or demolish any building, sign or structure in the City of Arlington, or do the same to the pavement of properties other than R-3 occupancies, or to excavate, grade, or fill property, or cause the same to be done, without first obtaining a separate building permit for such work from the Building Official.

B. For other than 1 and 2 family dwellings, approval of a Commercial Site Plan is required prior to filing the application for a building permit. Two copies of the approved Commercial Site Plan shall be submitted with each application for a building permit for the following work categories:

1. The construction of a new building,

2. The construction of an addition to a new building,

3. The construction of new parking facilities or the addition of parking facilities to an existing site,

4. The grading, excavation or filling of a parcel.

C. A Commercial Site Plan shall demonstrate compliance with the applicable zoning, environmental, fire and engineering regulations specific to the proposed project.

D. A permit shall be issued only to a Registrant meeting the conditions of Section 4.01 above, and only after all other requirements defined in this article have been accomplished.

Further, **Article IV** is hereby amended by the addition of **Section 4.02.5, Application for Commercial Site Plan,** so that said Section shall read as follows:

Section 4.02.5 Application for Commercial Site Plan

To obtain approval for a Commercial Site Plan, the applicant shall first file an application with the Building Official in writing on a form furnished for that purpose by said Building Official. Every such application shall:

1. Identify and describe the proposed development;

2. Describe the land on which the proposed work is to be done by lot, block, tract and building and street address, or similar description that will readily identify and definitely locate the proposed building or work;

3. Be accompanied by plans and specifications as required to demonstrate compliance with the zoning, environmental, engineering and fire regulations applicable to the project location;

4. Be signed by the applicant or an authorized agent, who may be required to submit evidence to indicate such authority; and

5. Give such other pertinent information as is deemed necessary by the Building Official.

Accepted plans and specifications shall not be changed, modified or altered without written authorization from the Building Official, and all work shall be done in accordance with the approved plans.

Further, **Article IV**, **Section 4.05**, Building Permits Issued, is hereby amended so that said Section shall read as follows:

Section 4.05 Building Permits Issued

A. The application, plans and specifications filed by an applicant for a permit shall be reviewed by the Building Official. Such plans may also be reviewed by other departments of the City of Arlington to check compliance with the laws and ordinances under their jurisdiction, including but not limited to review by the Water Utilities, Fire, Community Services, Community Development and Planning, and the Public Works and Transportation Department of the City of Arlington to ensure compliance with the Traffic Study Provisions adopted by resolution of the City Council. If the Building Official finds that the work described in an application for permit and the plans filed therewith conform to the requirements of this Building Code and other pertinent laws and that the permit fee has been paid, a permit shall be issued, however, except by specific approval by the Building Official or an authorized representative, a permit shall not be issued in a development where the construction of streets, drainage, water, sewer

and other such facilities have not been completed and accepted by the City of Arlington.

EXCEPTION: The owner of a property may choose to contract with a Third Party Provider that is properly registered with the City for plan review. Plan reviews performed by Third Party Organizations are subject to the terms of the program as authorized by resolution of the City Council of the City of Arlington.

B. Accepted plans and specifications shall not be changed, modified or altered without written authorization from the Building Official, and all work shall be done in accordance with the plans. One (1) set of plans, specifications and computations shall be retained by the Building Official for a period of not less than ninety (90) days from the date of completion of the work covered therein.

C. The Building Official may issue a permit for the construction of part of a building or structure before the entire plans and specifications for the whole building or structure have been submitted or approved, provided adequate information and detailed statements have been filed complying with all pertinent requirements of this Building Code. The holder of such permit shall proceed at personal risk without assurance that the permit for the entire building or structure will be granted.

D. Upon issuance of a building permit, the Building Official will issue a Building Permit representing that a permit has been issued. The Building Permit shall contain the address and legal description of the location, the name of the general contractor and a description of the work. The Building Permit shall be posted on the job location at all times during the time the building permit is valid and may not be removed until such time that the Building Official issues a final approval. The Building Permit shall be posted in front of the building so that it is visible from the addressed street or fire lane at all times. Work may be ordered to stop when such Building Permit is not displayed in accordance with this section.

Further, **Article IV** is hereby amended by the addition of **Section 4.05.5,** Expiration of Commercial Site Plan, so that said Section shall read as follows:

Section 4.05.5 Expiration of Commercial Site Plan

Every Commercial Site Plan approved by the Building Official under the provisions of this Building Code shall expire by limitation of time and become null and void if the owner, agent or authorized developer has not filed a valid application for a building permit within one hundred eighty (180) days from the date of approval of the Commercial Site Plan. An expired Commercial Site Plan must be reviewed as a new application before an application for a building permit may be submitted.

Further, **Article IV, Section 4.07**, Expiration of Permit, is hereby amended so that said Section shall read as follows:

Section 4.07 Expiration of Permit

Every permit issued by the Building Official under the provisions of this Building Code shall expire by limitation of time and become null and void if the building or work authorized by such permit is not commenced within one hundred eighty (180) days from the date of such permit, or if the building or work authorized by such permit is suspended or abandoned for a period of one hundred eighty (180) days at any time after the work is commenced. Before such work can be recommenced, a new permit shall be first obtained.

Any permittee holding an unexpired permit may apply in writing for an extension of the time within which work may commence under that permit when the permittee is unable to commence work within the time required for good and satisfactory reasons. The Building Official may extend the time for action by the permittee for a period not exceeding one hundred eighty (180) days. The permittee shall pay a fee for the extension of an unexpired permit. No permit shall be extended more than once.

Further, **Article IV, Section 4.08**, Suspension or Revocation of Permit, is hereby amended so that said Section shall read as follows:

Section 4.08 Suspension or Revocation of Permit

A. The Building Official may, in writing, suspend or revoke a permit issued under provisions of this Building Code whenever the permit is issued in error or on the basis of incorrect information having been supplied, or in violation of any law, including any provision of the Code of the City of Arlington. The Building Official may also deny building inspections or new permits to a contractor whose business registration with the City of Arlington is not in active status.

B. The Building Official may, in writing, revoke a permit for the construction of a 1- and 2-family dwelling issued under provisions of this Building Code whenever the completion of the project is delayed beyond a 24 month period if there has not been substantial progress made towards completion of the project.

Further, **Article IV, Section 4.11**, Expiration of Application and Plan Review, is hereby amended so that said Section **and title** shall read as follows:

Section 4.11 Expiration of Building Permit Application and Plan Review

An application for which no building permit is issued within one hundred eighty (180) days following the date of application may be voided due to limitation of time, and

plans submitted for review may thereafter be returned to the applicant or destroyed by the Building Official. The Building Official may extend the time for action on the application due to circumstances beyond the control of the applicant which have prevented action from being taken. The application may be extended for an additional 180 days upon a request in writing submitted to the Building Official. The application may be extended upon approval by the Building Official and payment of the extension fee prior to the expiration of the building permit application. An expired application may only be reactivated by the filing of a new application, including plans and fees. An applicant's written request for voluntary withdrawal of the application shall be deemed to be the same as an expiration of the application.

Further, **Article IV** is hereby amended by the addition of **Section 4.11.5,** Expiration of Commercial Site Plan Application, so that said Section shall read as follows:

Section 4.11.5 Expiration of Commercial Site Plan Application

A. An application for a Commercial Site Plan that is not approved for permitting within one hundred eighty (180) days following the date of application may be voided due to limitation of time, and plans submitted for review may thereafter be returned to the applicant or destroyed by the Building Official. The Building Official may extend the time for action on the application due to circumstances beyond the control of the applicant which have prevented action from being taken. The application may be extended for an additional 180 days upon a request in writing submitted to the Building Official. The application may be extended upon approval by the Building Official. An expired application may only be reactivated by the filing of a new application, including plans and any fees prior to the expiration of the Commercial Site Plan. An applicant's written request for voluntary withdrawal of the application shall be deemed to be the same as an expiration of the application.

B. In cases where a building permit has expired due to limitations, a Commercial Site Plan will expire 24 months from the date of Commercial Site Plan approval if an application for another building permit is not filed.

C. In cases where development is phased, a Commercial Site Plan will expire 24 months from the date of Commercial Site Plan approval if an application for a building permit is not filed for all of the undeveloped phases.

Further, **Article XVI**, Dangerous Buildings, **Section 16.02**, Definitions, is hereby amended to add the definition of "Hearing Authority" so that hereafter said section shall read as follows:

The following words as used in Articles XVI, XVII and XVIII shall be defined as stated below.

"Administrator" shall mean the City Manager appointed Department Administrator or their designees charged with the administration and enforcement of this Chapter.

"Building" shall mean any structure which is built for the support, shelter, or enclosure or partial enclosure of persons, animals, chattels, or movable property of any kind including pools.

"Hearing Authority" means the City's Municipal Court, a board or commission listed in the Administration Chapter of the City Code, or a person assigned the responsibility of conducting a hearing under this Chapter by the Administrator.

"Swimming Pool" or "Pool" shall be defined as referenced in the Health and Sanitation Chapters of the Arlington City Code of Ordinances.

Further, **Article XVI** is hereby amended by the addition of **Section 16.13** so that hereafter said section shall read as follows:

Section 16.13 <u>Requiring Repair, Removal, or Demolition of Structure</u>

A. If the Administrator has reason to believe that a fence, shed, awning, retaining wall, or other structure, or part of a structure, hereinafter referred to as "structure", is likely to endanger persons or property, the Administrator shall schedule a public hearing before the Hearing Authority for a determination of whether the structure is likely to endanger persons or property and for the issuing of a proposed order on the repair, removal or demolition of the structure.

B. <u>Hearing Authority Hearing</u>

1. <u>Scheduling a Hearing</u>. The Administrator shall schedule a hearing when the Administrator has determined that such structure is likely to endanger persons or property.

2. <u>Issuance of Notice</u>.

a. The Administrator shall issue a notice of hearing to each owner of the structure, owner of the property on which the structure is located, mortgagee, and lienholder, as known by the City and as shown by search of the following records:

(1) Official Public Records of Real Property in Tarrant County, specifically in the Tarrant County Clerk's Office;

(2) Appraisal district records for the appraisal district in which the structure is located;

(3) Records of the Texas Secretary of State;

(4) Assumed name records for Tarrant County;

(5) Tax records of the City of Arlington; and

(6) Utility records for the City of Arlington.

b. The Administrator shall issue notice of hearing to all unknown owners, if any, by posting a copy of the notice on the front door of each improvement situated on the affected property or as close to the front door as practicable.

3. Contents of Notice. The notice shall contain:

a. The street address or legal description of the structure;

b. A statement that the Administrator has found that the structure is likely to endanger persons or property, and a brief description of the conditions found to render such likely to endanger persons or property;

c. A statement specifying the date, time and place of the hearing; and

d. A statement that the owner of the structure, owner of the property on which the structure is located, mortgagee, and lienholder will be afforded an opportunity to comment at the hearing and will be required to submit at the hearing proof of the scope of any work that may be required to abate the condition likely to endanger persons or property and the time it will take to reasonably perform the work.

4. Service of Notice.

a. Notice of the hearing shall be given by certified mail, return receipt requested, or by personal service. If the address of any person entitled to notice cannot be ascertained, or if service cannot be made by mail or in person after a reasonable attempt, and for all unknown owners, service shall be made by posting a copy of the notice on the front door of each improvement situated on the affected property or as close to the front door as practicable.

b. The notice shall be mailed and/or posted before the tenth (10th) day before the date of the hearing. Service by certified mail shall be effective on the date of mailing.

c. Proof of personal service shall be certified at the time of service by a written declaration executed by the person effecting service, declaring the date, time and manner in which service was made. The declaration, together with any receipt card returned in acknowledgment of receipt by certified mail shall be affixed to the copy of the notice retained by the Administrator.

d. Notice of the hearing may be filed in the Official Public Records of Real Property in Tarrant County, specifically in the Tarrant County Clerk's Office. The notice shall contain:

(1) the name and address of the owner of the affected property if that information can be determined;

(2) a legal description of the affected property; and

(3) a description of the hearing.

The filing of the notice is binding on subsequent grantees, lienholders, or other transferees of an interest in the property who acquire such interest after filing of the notice, and constitutes notice of the hearing on any subsequent recipient of any interest in the property who acquires such interest after the filing of the notice.

5. Conduct of Hearing.

a. Failure to Appear. If the owner fails to appear at the hearing after being duly served, the Hearing Authority shall conduct the hearing as if the owner personally appeared.

b. Subpoena Power. Witnesses may be subpoenaed in accordance with the procedures set forth in Article XI of the Administration Chapter of the City Code of Ordinances.

c. Procedure. The Hearing Authority shall be authorized to establish rules and regulations for the conduct of hearings, if such are consistent with this Chapter, other local ordinances and state law.

6. Findings and Orders.

a. After all evidence has been presented, the Hearing Authority shall determine whether the structure is likely to endanger persons or property.

b. The Hearing Authority shall enter an order as set forth below:

(1) If the structure is believed by the Hearing Authority to likely endanger persons or property, the Hearing Authority may issue an order that:

(a) finds that the structure is likely to endanger persons or property;

(b) orders the owner of the structure or owner of the property on which the structure is located, at his option, to repair, remove, or demolish the structure, or the part of the structure within a specified time;

(c) orders an additional specified period of time for all mortgagees or lienholders to comply with the order should the owner of the structure or the owner of the property on which the structure is located fail to comply with the order within the time provided for action; and

(d) orders that if the owner of the structure or the owner of the property on which the structure is located fails to comply with any part of the order by the specified dates and if any of the mortgagees or lienholders fail to comply with the order in the owner's stead by the specified dates, the City is hereby authorized at its discretion to repair, remove or demolish, at the expense of the City, on behalf of the owner of the structure or the owner of the property on which the structure is located, and assess the repair, removal or demolition expenses on the property on which the structure was located.

(2) If the structure is not believed by the Hearing Authority to likely endanger persons or property, the Hearing Authority may issue an order that finds that the structure is not likely to endanger persons or property.

7. Proposed Order.

a. The proposed order issued by the Hearing Authority shall be in writing and shall set forth the decisions of the Hearing Authority made pursuant to this Chapter.

b. An order to repair, remove or demolish shall set forth those items that need to be repaired, removed, or demolished.

c. The proposed order shall be signed and dated by the Municipal Court Judge or one or more persons assigned the responsibility of conducting a hearing under this Chapter.

d. After the hearing, the Hearing Authority shall promptly send a copy of the proposed order, a record of the hearing and any evidence to the Administrator.

e. The Administrator shall promptly send a copy of the Hearing Authority's proposed order by certified mail, return receipt requested, to the owner of the structure, owner of the property on which the structure is located, mortgagee, and lienholder. If a notice is mailed according to this subsection and the United States Postal Service returns the notice as "refused" or "unclaimed", the validity of the notice is not affected, and the notice shall be deemed as delivered.

f. The Administrator may schedule on the City Council agenda the proposed order for final resolution by City Council. The Administrator shall issue notice to each owner of the structure, owner of the property on which the structure is located, mortgagee, and lienholder of the City Council agenda date, time and place for final resolution pursuant to the issuance, contents and service of notice for the Hearing Authority's hearing in this Chapter.

C. City Council Resolution

1. City Council may adopt, in whole or part, by City Council Resolution, the Hearing Authority's order as its finding and order.

2. City Council may amend, modify or reject the Hearing Authority's order. If City Council amends, modifies or rejects the Hearing Authority's order, the City Council by City Council Resolution shall issue its finding and order. City Council's finding and order shall be issued in accordance with the Hearing Authority's procedures for Findings and Decisions set forth in this Chapter.

3. A copy of the City Council Resolution shall be sent promptly by the Administrator by certified mail, return receipt requested, to the owner of the structure, owner of the property on which the structure is located, mortgagee, and lienholder. If such City Council Resolution is mailed according to this subsection and the United States Postal Service returns the order as "refused" or "unclaimed", the validity of notice of the order is not affected, and the order shall be deemed as delivered.

4. Within ten (10) days after the date of passage of the City Council Resolution:

   a. a copy of the City Council Resolution containing its finding and order regarding the structure shall be filed in the Office of the City Secretary; and

   b. a notice shall be published in a newspaper of general circulation in the City, said notice containing:

      (1) the street address or legal description of the property;

      (2) the date of consideration of the City Council Resolution;

      (3) a brief statement indicating the results of the City Council Resolution; and

      (4) instructions stating where a complete copy of the City Council Resolution may be obtained.

      (5) If the owner of the structure or the owner of the property on which the structure is located fails to comply with an order in the City Council Resolution within the allotted time, the Administrator shall cause a copy of the City Council Resolution to be sent by certified mail return receipt requested to each lienholder and mortgagee as was determined pursuant to this Chapter. This shall constitute notice to the lienholders and mortgagees that the owner has failed to comply with the order.

5. When any work to repair, remove, or demolish is done pursuant to this Chapter, the Administrator shall cause the work to be accomplished by City personnel or by private contract under the direction of the Administrator, or he may employ such architectural, engineering, or other specialized assistance on a contract basis as reasonably necessary.

6. Any expenses for work to repair, remove or demolish shall be assessed pursuant to Article XVIII of the Construction Chapter except as to the following:

The Administrator shall also provide notice of the assessment to the owner of the structure and the owner of the property on which the structure was located by mailing by certified mail, postage prepaid a copy of the Hearing Authority's order assessing cost.

2.

Any person, firm, corporation, agent or employee thereof who violates any of the provisions of this ordinance shall be guilty of a misdemeanor and upon conviction thereof shall be fined an amount not to exceed Two Thousand Dollars and No Cents ($2,000.00) for each offense. Each day that a violation is permitted to exist shall constitute a separate offense.

3.

This ordinance shall be and is hereby declared to be cumulative of all other ordinances of the City of Arlington; and this ordinance shall not operate to repeal or affect any of such other ordinances except insofar as the provisions thereof might be inconsistent or in conflict with the provisions of this ordinance, in which event such conflicting provisions, if any, in such other ordinance or ordinances are hereby repealed.

4.

If any section, subsection, sentence, clause or phrase of this ordinance is for any reason held to be unconstitutional, such holding shall not affect the validity of the remaining portions of this ordinance.

5.

All of the regulations provided in this ordinance are hereby declared to be governmental and for the health, safety and welfare of the general public. Any member of the City Council or any City official or employee charged with the enforcement of this ordinance, acting for the City of Arlington in the discharge of his/her duties, shall not thereby render himself/herself personally liable; and he/she is hereby relieved from all personal liability for any damage that might accrue to persons or property as a result of any act required or permitted in the discharge of his/her said duties.

Any violation of this ordinance can be enjoined by a suit filed in the name of the City of Arlington in a court of competent jurisdiction, and this remedy shall be in addition to any penal provision in this ordinance or in the Code of the City of Arlington.

7.

The caption and penalty clause of this ordinance shall be published in a newspaper of general circulation in the City of Arlington, Texas, in compliance with the provisions of Article VII, Section 15, of the City Charter. Further, this ordinance may be published in pamphlet form and shall be admissible in such form in any court, as provided by law.

8.

This ordinance shall become effective upon second publication.

PRESENTED AND GIVEN FIRST READING on the 21st day of April, 2009, at a regular meeting of the City Council of the City of Arlington, Texas; and GIVEN SECOND READING, passed and approved on the 5th day of May, 2009, by a vote of 9 ayes and 0 nays ~~at a~~ regular meeting of the City Council of the City of Arlington, Texas.

ROBERT N. CLUCK, Mayor

ATTEST:

KAREN BARLAR, City Secretary

APPROVED AS TO FORM:
JAY DOEGEY, City Attorney

BY

Ordinance No. 09-032

An ordinance amending the "Construction" Chapter of the Code of the City of Arlington, Texas, 1987, through the amendment of Article II, Building Code Board Of Appeals, by the addition of Section 2.09, Model Code Adoption or Amendment, related to procedures for adopting or amending a model code; providing this ordinance be cumulative, providing for severability, governmental immunity, injunctions, publication and an effective date

BE IT ORDAINED BY THE CITY COUNCIL OF THE CITY OF ARLINGTON, TEXAS:

1.

That the **"Construction"** Chapter of the Code of the City of Arlington, Texas, 1987, is hereby amended through the amendment of **Article II**, Building Code Board Of Appeals, by the addition of Section 2.09, Model Code Adoption or Amendment, so that hereafter said section shall read as follows:

Section 2.09 Model Code Adoption or Amendment

A. In this section, "national model code" means a publication that is developed, promulgated, and periodically updated at a national level by organizations consisting of industry and government fire and building safety officials through a legislative or consensus process and that is intended for consideration by units of government as local law. National model codes include the International Residential Code, the National Electrical Code, and the International Building Code.

B. The Board is established as an advisory board for the purpose of obtaining public comment on the proposed adoption of or amendment to a national model code, and providing a recommendation to City Council. On or before the 10th day before the date the Board conducts a public hearing to consider the adoption of or amendment to a national model code, the City shall publish notice of the proposed action and the date of the public hearing conspicuously on the City's Internet website.

C. Except as provided by Subsection (D), adoption of an ordinance or national model code provision that is intended to govern the construction, renovation, use, or maintenance of buildings and building systems in the City shall have a delayed effective date that will delay implementing and enforcing the ordinance or code provision for at least 30 days after final adoption of the ordinance, to permit persons affected to comply with the ordinance or code provision.

D. If a delay in implementing or enforcing the ordinance or code provision would cause imminent harm to the health or safety of the public, the City may enforce the ordinance or code provision immediately on the effective date of the ordinance or code provision.

2.

This ordinance shall be and is hereby declared to be cumulative of all other ordinances of the City of Arlington; and this ordinance shall not operate to repeal or affect any of such other ordinances except insofar as the provisions thereof might be inconsistent or in conflict with the provisions of this ordinance, in which event such conflicting provisions, if any, in such other ordinance or ordinances are hereby repealed.

3.

If any section, subsection, sentence, clause or phrase of this ordinance is for any reason held to be unconstitutional, such holding shall not affect the validity of the remaining portions of this ordinance.

4.

All of the regulations provided in this ordinance are hereby declared to be governmental and for the health, safety and welfare of the general public. Any member of the City Council or any City official or employee charged with the enforcement of this ordinance, acting for the City of Arlington in the discharge of his/her duties, shall not thereby render himself/herself personally liable; and he/she is hereby relieved from all personal liability for any damage that might accrue to persons or property as a result of any act required or permitted in the discharge of his/her said duties.

5.

Any violation of this ordinance can be enjoined by a suit filed in the name of the City of Arlington in a court of competent jurisdiction, and this remedy shall be in addition to any penal provision in this ordinance or in the Code of the City of Arlington.

6.

The caption of this ordinance shall be published in a newspaper of general circulation in the City of Arlington, Texas, in compliance with the provisions of Article VII, Section 15, of the City Charter. Further, this ordinance may be published in pamphlet form and shall be admissible in such form in any court, as provided by law.

This ordinance shall become effective upon second publication.

PRESENTED AND GIVEN FIRST READING on the **9th** day of **June, 2009**, at a regular meeting of the City Council of the City of Arlington, Texas; and GIVEN SECOND READING, passed and approved on the **23rd** day of **June, 2009,** by a vote of **9 ayes** and **0 nays** at a regular meeting of the City Council of the City of Arlington, Texas.

ROBERT N. CLUCK, Mayor

ATTEST:

KAREN BARLAR, City Secretary

APPROVED AS TO FORM:
JAY DOEGEY, City Attorney

BY

Ordinance No. 09-056

An ordinance amending the "Construction" Chapter of the Code of the City of Arlington, Texas, 1987, through the amendment of Article I, Building Code, Subsection 1.04, Amendments, Additions and Deletions, by the deletion of Subsection (C)(78) and the renumbering of the remaining subsections; by the amendment of renumbered Subsection (C)(78), relative to removing the definition of Swimming Pools; by the amendment of renumbered Subsection (C)(79), relative to public swimming pools; by the amendment of renumbered Subsection (C)(81), relative to entrapment avoidance; by the addition of a Subsection (C)(83) relative to Chapter 35, Reference Standards; through the amendment of Section 1.04, by the amendment of Subsection (D)(75), relative to swimming pools, spas and hot tubs; providing for a fine of up to $2,000 for each offense in violation of the ordinance; providing this ordinance be cumulative; providing for severability, governmental immunity, injunctions, and publication; and becoming effective on October 23, 2009

WHEREAS, a public hearing was held on June 24, 2009, before the Building Code Board of Appeals relative to proposed amendments to the Construction Chapter of the Code of the City of Arlington, Texas, 1987; and

WHEREAS, the Building Code Board of Appeals unanimously approved the proposed amendments; NOW THEREFORE

BE IT ORDAINED BY THE CITY COUNCIL OF THE CITY OF ARLINGTON, TEXAS:

1.

That the **"Construction"** Chapter of the Code of the City of Arlington, Texas, 1987, is hereby amended through the amendment of **Article I**, Building Code, **Section 1.04**, Amendments, Additions and Deletions, by the **deletion** of Subsection (C)(78) and the **renumbering** of the remaining subsections.

Further, the renumbered **Subsection 1.04(C)(78)** is hereby amended so that hereafter said subsection shall read as follows:

(78) The amendment of Section 3109.2 entitled Definitions, to read as follows:

3109.2 Definition. The following words and terms shall, for the purposes of this section and as used elsewhere in this code, have the meaning shown herein.

MULTI-UNIT RENTAL COMPLEX is two or more dwelling units in one or more buildings that are under common ownership, managed by the same owner, managing agent, or management company, and located on the same lot or tract of land or adjacent lots or tracts of land. The term includes a condominium project. The term does not include:

(A) A facility primarily renting rooms to overnight guests; or

(B) A single-family home or adjacent single-family homes that are not part of a condominium project.

POOL DECK is a flat walking surface consisting of wood, stone, brick, concrete or other similar material located within five feet (5') of the waters edge of a swimming pool or spa.

PROPERTY OWNERS ASSOCIATION is an association of property owners for a residential subdivision, condominium, cooperative, townhouse project, or other project involving residential dwellings.

SELF-CLOSING GATE is a gate, which closes or shuts automatically, without the aid of human, electrical, solar or battery power after being opened.

SELF-CLOSING AND SELF-LATCHING DEVICE is a device that causes a gate to automatically close and latch without human, electrical, solar or battery power.

Further, the renumbered **Subsection 1.04(C)(79)** is hereby amended so that hereafter said subsection shall read as follows:

(79) The amendment of **Section 3109.3**, entitled **Public Swimming Pools** to read as follows:

3109.3 Public Swimming Pools. Public swimming pools (pools not accessory to a 1- or 2-family dwelling) shall be completely enclosed by a fence that complies with the Health and Sanitation Chapter, Article VII, Public Swimming Pools, Section 7.01.

Further, the renumbered **Subsection 1.04(C)(81)** is hereby amended so that hereafter said subsection shall read as follows:

(81) The amendment of Section 3109.5, entitled Entrapment avoidance., to read as follows:

3109.5 Entrapment avoidance. Suction outlets shall be designed and installed in accordance with ANSI/APSP-7.

Further, **Subsection 1.04(C)** is hereby amended by the addition of a Subsection (83) so that hereafter said subsection shall read as follows:

(83) The amendment of Chapter 35, entitled Referenced Standards., to read as follows:

ASME

ANSI/APSP-7-06, Standard for Suction Entrapment Avoidance in Swimming Pools, Wading Pools, Spas, Hot Tubs and Catch Basins 3109.5.1

Further, **Subsection 1.04(D)(75)** is hereby amended so that hereafter said subsection shall read as follows:

(75) The amendment of I.R.C. Appendix G, entitled *Swimming Pools, Spas and Hot Tubs*, to read as follows:

APPENDIX G
SWIMMING POOLS, SPAS AND HOT TUBS

SECTION AG 101
GENERAL

AG 101.1 General. The provisions of this appendix shall control the design and construction of swimming pools, spas and hot tubs installed in or on the lot of a one- and two-family dwelling.

SECTION AG 102
PERMITS AND INSPECTIONS

AG 102.1 Permit Required. A permit shall be required to construct and/or erect a swimming pool. A permit may only be issued to a registrant as set out in Article IV of the Construction Chapter.

AG 102.2 Submittal required. An application for a permit to construct and/or erect a swimming pool shall be accompanied by the following:

1. Two (2) site plans indicating the location of the proposed swimming pool and the associated swimming pool decks on the lot that have been stamped by the electrical service provider,
2. Lot grading plans, including surface drain inlets and discharges, for both before and after construction,
3. The plans for pool barrier compliance, and
4. Any additional information that may be required by the Building Official.

AG 102.3 Inspection required. After an application for a permit to construct and/or erect a swimming pool has been issued in accordance with Article IV of the Construction Chapter, the following inspections are required as a minimum as applicable:

1. Belly steel inspection,
2. Electrical bonding inspection,
2.1 Pool entrapment protection system,
3. Underground electrical inspection,
4. Underground plumbing and gas piping inspection, and
5. Final inspection to include verification of swimming pool barrier compliance (prior to plastering the swimming pool).

AG 102.4 Lot grading and surface drainage. The construction and/or erection of a swimming pool may not alter the lot grading or drainage patterns intended by the lot's approved grading plan and/or the subdivision's approved grading and drainage plans. The point of discharge of collected surface drains and rain gutters may not exit onto adjacent properties as a concentrated point of discharge.

AG 102.5 It shall be unlawful for the registrant to permit or cause the swimming pool to be filled with water before the existence of a lawful swimming pool barrier is inspected and approved.

SECTION AG 103
DEFINITIONS

AG 103.1 General. For the purposes of these requirements, the terms used shall be defined as follows and as set forth in Chapter 2.

ABOVE-GROUND/ON-GROUND POOL. See "Swimming pool."

BARRIER. A fence, wall, building wall or combination thereof which completely surrounds the swimming pool and obstructs access to the swimming pool.

HOT TUB. See "Swimming pool."

IN-GROUND POOL. See "Swimming pool."

POOL DECK. A flat walking surface consisting of wood, stone, brick, concrete or other similar material located within 5 feet (1524 mm) of the water's edge of a swimming pool.

RESIDENTIAL. That which is situated on the premises of a detached one- or two-family dwelling or a one-family townhouse not more than three stories in height.

SELF-CLOSING GATE. A gate which closes or shuts automatically without the aid of human, electrical, solar or battery power after being opened.

SELF-CLOSING AND SELF-LATCHING DEVICE. A device that causes a gate to automatically close and latch without human, electrical, solar or battery power.

SPA, NONPORTABLE. See "Swimming pool."

SPA, PORTABLE. A nonpermanent structure intended for recreational bathing, in which all controls, water-heating and water-circulating equipment are an integral part of the product.

SWIMMING POOL. Any structure intended for swimming or recreational bathing that contains water over 24 inches (610 mm) deep. This includes in-ground, above-ground and on-ground swimming pools, hot tubs and spas.

SWIMMING POOL, INDOOR. A swimming pool which is totally contained within a structure and surrounded on all four sides by walls of said structure.

SWIMMING POOL, OUTDOOR. Any swimming pool which is not an indoor pool.

SECTION AG 104
SWIMMING POOLS

AG 104.1 In-ground pools. In-ground pools shall be designed and constructed in conformance with ANSI/NSPI-5 as listed in Section AG108.

AG 104.2 Above-ground and on-ground pools. Above-ground and on-ground pools shall be designed and constructed in conformance with ANSI/NSPI-4 as listed in Section AG108.

SECTION AG 105
SPAS AND HOT TUBS

AG 105.1 Permanently installed spas and hot tubs. Permanently installed spas and hot tubs shall be designed and constructed in conformance with ANSI/NSPI-3 as listed in Section AG 108.

AG 105.2 Portable spas and hot tubs. Portable spas and hot tubs shall be designed and constructed in conformance with ANSI/NSPI-6 as listed in Section AG108.

SECTION AG 106
BARRIER REQUIREMENTS

AG 106.1 Application. The provisions of this chapter shall control the design of barriers for residential swimming pools, spas and hot tubs. These design controls are intended to provide protection against potential drownings and near-drownings by restricting access to swimming pools, spas and hot tubs.

AG 106.2 Outdoor swimming pool. An outdoor swimming pool, including an in-ground, above-ground or on-ground pool, hot tub or spa shall be provided with a barrier which shall comply with the following:

1. The top of the barrier shall be at least 48 inches (1219 mm) above grade measured on the side of the barrier which faces away from the swimming pool. The maximum vertical clearance between grade and the bottom of the barrier shall be 2 inches (51 mm) measured on the side of the barrier which faces away from the swimming pool. Where the top of the pool structure is above grade, such as an above-ground pool, the barrier may be at ground level, such as the pool structure, or mounted on top of the pool structure. Where the barrier is mounted on top of the pool structure, the maximum vertical clearance between the top of the pool structure and the bottom of the barrier shall be 4 inches (102 mm).
2. Openings in the barrier shall not allow passage of a 4-inch-diameter (102 mm) sphere.
3. Solid barriers which do not have openings, such as a masonry or stone wall, shall not contain indentations or protrusions except for normal construction tolerances and tooled masonry joints.

4. Where the barrier is composed of horizontal and vertical members and the distance between the tops of the horizontal members is less than 45 inches (1143 mm), the horizontal members shall be located on the swimming pool side of the fence. Spacing between vertical members shall not exceed 1.75 inches (44 mm) in width. Where there are decorative cutouts within vertical members, spacing within the cutouts shall not exceed 1.75 inches (44 mm) in width.
EXCEPTION: When the horizontal members are part of a fence that is at least 6 feet (1829 mm) in height, the horizontal members need not be on the pool side of the barrier.
5. Where the barrier is composed of horizontal and vertical members and the distance between the tops of the horizontal members is 45 inches (1143 mm) or more, spacing between vertical members shall not exceed 4 inches (102 mm). Where there are decorative cutouts within vertical members, spacing within the cutouts shall not exceed 1.75 inches (44 mm) in width.
6. Maximum mesh size for chain link fences shall be a 1.25-inch (32 mm) square unless the fence is provided with slats fastened at the top or the bottom which reduce the openings to not more than 1.75 inches (44 mm).
7. Where the barrier is composed of diagonal members, such as a lattice fence, the maximum opening formed by the diagonal members shall not be more than 1.75 inches (44 mm).
8. Access gates shall comply with the requirements of Section AG 106.2, Items 1 through 7, and shall be equipped to accommodate a locking device. Pedestrian access gates shall open outward away from the pool and shall be self-closing and have a self-latching device. Gates other than pedestrian access gates shall have a self-latching device. Where the release mechanism of the self-latching device is located less than 54 inches (1372 mm) from the bottom of the gate, the release mechanism and openings shall comply with the following:
   8.1. The release mechanism shall be located on the pool side of the gate at least 3 inches (76 mm) below the top of the gate, and
   8.2. The gate and barrier shall have no opening greater than 0.5 inch (12.7 mm) within 18 inches (457 mm) of the release mechanism.
   8.3. Driveway access gates across a paved or improved surface intended for regular vehicle access shall not be located in a swimming pool barrier.
9. Where a wall of a dwelling serves as part of the barrier one of the following conditions shall be met:
   9.1. All doors with direct access to the pool through that wall shall be equipped with an alarm which produces an audible warning when the door and its screen, if present, are

opened. The alarm shall sound continuously for a minimum of 30 seconds immediately after the door is opened and be capable of being heard throughout the house during normal household activities. The alarm shall automatically reset under all conditions. The alarm system shall be equipped with a manual means, such as touchpad or switch, to temporarily deactivate the alarm for a single opening. Such deactivation shall last for not more than 15 seconds. The deactivation switch(es) shall be located at least 54 inches (1372 mm) above the threshold of the door; or

9.2. Other means of protection, such as self-closing doors with self-latching devices, which are approved by the governing body, shall be acceptable so long as the degree of protection afforded is not less than the protection afforded by Item 9.1 described above.

10. Where an above-ground pool structure is used as a barrier or where the barrier is mounted on top of the pool structure and the means of access is a ladder or steps, then:

10.1. The ladder or steps shall be capable of being secured, locked or removed to prevent access, or

10.2. The ladder or steps shall be surrounded by a barrier which meets the requirements of Section AG 106.2, Items 1 through 9. When the ladder or steps are secured, locked or removed, any opening created shall not allow the passage of a 4-inch-diameter (102 mm) sphere.

AG 106.3 Indoor swimming pool. All walls surrounding an indoor swimming pool shall comply with Section AG 106.2, Item 9.

AG 106.4 Prohibited locations. Barriers shall be located so as to prohibit permanent structures, equipment or similar objects from being used to climb the barriers.

AG 106.5 Barrier exceptions. Spas or hot tubs with a safety cover which complies with ASTM F 1346, as listed in Section AG 108, shall be exempt from the provisions of this appendix.

SECTION AG 107
ENTRAPMENT PROTECTION FOR SWIMMING POOL AND SPA SUCTION OUTLETS

AG 107.1 General. Suction outlets shall be designed and installed in accordance with ANSI/APSP-7.

SECTION AG 108
ABBREVIATIONS

AG 108.1 General.

ANSI-American National Standards Institute, 11 West 42nd Street, New York, NY 10036

ASTM-American Society for Testing and Materials, 1916 Race Street, Philadelphia, PA 19103

NSPI-National Spa and Pool Institute, 2111 Eisenhower Avenue, Alexandria, VA 22314

SECTION AG 109
STANDARDS

AG 109.1 General.

ANSI/NSPI

ANSI/NSPI-3 Standard for Permanently Installed Residential SpasAG 104.1

ANSI/NSPI-4 Standard for Above-ground/On-ground Residential Swimming Pools. ..... AG 103.2

ANSI/NSPI-5 Standard for Residential In-ground Swimming Pools.AG 103.1

ANSI/NSPI-6 Standard for Residential Portable Spas. ..... AG 104.2

ASME/ANSI
112.19.8-2007 Suction Fittings for Use in Swimming Pools, Wading Pools, Spas, Hot Tubs and Whirlpool Bathing Appliances..... AG107.1

ANSI/APSP-7-06 Standard for Suction Entrapment Avoidance in Swimming Pools, Wading Pools, Spas, Hot Tubs and Catch Basins..... AG 107.1

ASTM

ASTM F 1346-91 Standard Performance Specifications for Safety Covers and Labeling Requirements for All Covers for Swimming Pools, Spas and Hot Tubs. ..... AG 105.2, AG 105.5

2.

Any person, firm, corporation, agent or employee thereof who violates any of the provisions of this ordinance shall be guilty of a misdemeanor and upon conviction thereof shall be fined an amount not to exceed Two Thousand and No/100 Dollars ($2,000) for each offense. Each day that a violation is permitted to exist shall constitute a separate offense.

3.

This ordinance shall be and is hereby declared to be cumulative of all other ordinances of the City of Arlington; and this ordinance shall not operate to repeal or affect any of such other ordinances except insofar as the provisions thereof might be inconsistent or in conflict with the provisions of this ordinance, in which event such conflicting provisions, if any, in such other ordinance or ordinances are hereby repealed.

4.

If any section, subsection, sentence, clause or phrase of this ordinance is for any reason held to be unconstitutional, such holding shall not affect the validity of the remaining portions of this ordinance.

5.

All of the regulations provided in this ordinance are hereby declared to be governmental and for the health, safety and welfare of the general public. Any member of the City Council or any City official or employee charged with the enforcement of this ordinance, acting for the City of Arlington in the discharge of his/her duties, shall not thereby render himself/herself personally liable; and he/she is hereby relieved from all personal liability for any damage that might accrue to persons or property as a result of any act required or permitted in the discharge of his/her said duties.

6.

Any violation of this ordinance can be enjoined by a suit filed in the name of the City of Arlington in a court of competent jurisdiction, and this remedy shall be in addition to any penal provision in this ordinance or in the Code of the City of Arlington.

7.

The caption and penalty clause of this ordinance shall be published in a newspaper of general circulation in the City of Arlington, Texas, in compliance with the provisions of Article VII, Section 15, of the City Charter. Further, this ordinance may be published in pamphlet form and shall be admissible in such form in any court, as provided by law.

8.

Section 214.218 of the Texas Local Government Code requires that adoption of an ordinance or national model code provision that is intended to govern the construction, renovation, use, or maintenance of buildings and building systems in the City shall have a delayed effective date that will delay implementing and enforcing the ordinance or code provision for at least 30 days after final adoption of the ordinance, to permit persons affected to comply with the ordinance or code provision.

9.

This ordinance shall become effective October 23, 2009, which is 30 days after the final adoption of the ordinance at the second reading on September 22, 2009.

PRESENTED, FINALLY PASSED AND APPROVED, AND EFFECTIVE on the 22nd day of September, 2009, by a vote of 8 ayes and 0 nays at a regular meeting of the City Council of the City of Arlington, Texas.

ROBERT N. CLUCK, Mayor

ATTEST:

KAREN BARLAR, City Secretary

CITY OF ARLINGTON ARLINGTON, TEXAS

APPROVED AS TO FORM:
JAY DOEGEY, City Attorney

BY

Ordinance No. 10-009

An ordinance amending the "Construction" Chapter of the Code of the City of Arlington, Texas, 1987, through the amendment of Article I, Building Code, by the amendment of Section 1.08, Enforcement, Violations and Penalties, relative to changing the title of the section and updating penalty provisions; and by the addition of Section 1.13, Electronic Submittal of Final Plans; Article IV, Registration, Permits and Inspections, Section 4.02.5, Application for Commercial Site Plan, and Section 4.04, Plans and Specifications; Article VI, Prefabricated or Modular Buildings, Section 6.01, General; Article VII, Signs, Section 7.07, Structural Requirements; and Article X, Emergency Locator Directory, Section 10.04, Information Required; relative to a requirement that final plans or other documents that will be archived must be submitted in electronic format; through the amendment of Article XIII, Outdoor Festivals, by the deletion of Section 13.11, Penalty; through the amendment of Article XVI, Dangerous Buildings, Section 16.11, Other Enforcement, Subsection (E); and by the addition of Article XIX, Penalty; relative to updated penalty provisions; providing for a fine of up to $2,000 for each offense in violation of the ordinance; providing this ordinance be cumulative; providing for severability, governmental immunity, injunctions, publication; and an effective date

BE IT ORDAINED BY THE CITY COUNCIL OF THE CITY OF ARLINGTON, TEXAS:

1.

That the "**Construction**" Chapter of the Code of the City of Arlington, Texas, 1987, is hereby amended through the amendment of Article I, Building Code, by the amendment of **Section 1.08, Enforcement, Violations and Penalties**, so that hereafter said section shall read as follows:

Section 1.08 Enforcement, Violations

A. It shall be unlawful for any person, firm or corporation to erect, construct, enlarge, alter, repair, move, improve, remove, convert, demolish, equip, use, occupy or maintain any building, structure or premises in the City of Arlington, or

cause or permit the same to be done, contrary to or in violation of any of the provisions of this Building Code.

B. In addition to the power of the Building Official under I.B.C., Section 104.6, entitled "Right of Entry," to inspect a building pursuant to this Building Code, any peace officer may enter the public areas of any building or premises, or any areas specified in a proper inspection warrant, at all reasonable times wherever necessary in the performance of official duties to inspect and investigate for violations of any law, or to enforce any law, including violations of this Building Code. The peace officer shall first present proper credentials and request entry, unless otherwise permitted by law. If such entry is refused or, if no owner or other person having charge or control of the building or premises can be located, the peace officer shall have recourse to every remedy provided by law to secure entry.

C. No owner, occupant or any other person having charge, care or control of any building or premises shall fail or neglect, after proper request is made pursuant to Subsection B above, to promptly permit entry therein by a peace officer in the performance of the peace officers duty. Any person violating this Subsection shall be guilty of a misdemeanor.

Further, Article I is amended by the addition of **Section 1.13**, Electronic Submittal of Final Plans, so that hereafter said section shall read as follows:

Section 1.13 Electronic Submittal of Final Plans

Final plans or other documents required by the Building Code that will be archived must be submitted in an electronic format specified by the Director of Community Development and Planning ("CDP Director") as a condition to issuance of any type of permit, approval, or other action related to the final plans or documents. The City may provide an electronic conversion service for a fee in the amount set forth by City Council resolution. The CDP Director shall provide a schedule indicating which documents must be provided electronically, at which point during the approval process, and other information as necessary to implement an electronic archiving program.

Further, Article IV, Registration, Permits and Inspections, is hereby amended by the amendment of **Section 4.02.5**, Application for Commercial Site Plan, so that hereafter said section shall be and read as follows:

Section 4.02.5 Application for Commercial Site Plan

A. To obtain approval for a Commercial Site Plan, the applicant shall first file an application with the Building Official in writing on a form furnished for that purpose by said Building Official. Every such application shall:

1. Identify and describe the proposed development;

2. Describe the land on which the proposed work is to be done by lot, block, tract and building and street address, or similar description that will readily identify and definitely locate the proposed building or work;

3. Be accompanied by plans and specifications as required to demonstrate compliance with the zoning, environmental, engineering and fire regulations applicable to the project location;

4. Be signed by the applicant or an authorized agent, who may be required to submit evidence to indicate such authority; and

5. Give such other pertinent information as is deemed necessary by the Building Official.

B. Accepted plans and specifications shall not be changed, modified or altered without written authorization from the Building Official, and all work shall be done in accordance with the approved plans.

C. Final plans or other documents that will be archived must be submitted in an electronic format specified by the Director of Community Development and Planning ("CDP Director") as a condition to issuance of any type of permit, approval, or other action related to the final plans or documents. The City may provide an electronic conversion service for a fee in the amount set forth by City Council resolution. The CDP Director shall provide a schedule indicating which documents must be provided electronically, at which point during the approval process, and other information as necessary to implement an electronic archiving program.

Further, Article IV, is hereby amended by the amendment of **Section 4.04**, Plans and Specifications, by the addition of Subsection (D), so that hereafter said subsection shall be and read as follows:

D. Final plans or other documents that will be archived must be submitted in an electronic format specified by the Director of Community Development and Planning ("CDP Director") as a condition to issuance of any type of permit, approval, or other action related to the final plans or documents. The City may provide an electronic conversion service for a fee in the amount set forth by City Council resolution. The CDP Director shall provide a schedule indicating which documents must be provided electronically, at which point during the approval process, and other information as necessary to implement an electronic archiving program.

Further, Article VI, Prefabricated or Modular Buildings, is hereby amended by the amendment of **Section 6.01**, General, so that hereafter said section shall be and read as follows:

Section 6.01 General

All modular buildings shall comply with V.A.C.S., Article 5221f-1, "Industrialized Housing and Buildings".

All modular buildings shall have submitted for approval by the applicant a building permit request along with all plans and specifications deemed necessary by the Building Official. Such plans shall bear the stamp of a design review agency approved by the State of Texas. The Building Official shall review such plans for compliance with all applicable laws. Further, each modular component shall bear the decal of the Texas Department of Labor and Standards. Final plans or other documents that will be archived must be submitted in an electronic format specified by the Director of Community Development and Planning ("CDP Director") as a condition to issuance of any type of permit, approval, or other action related to the final plans or documents. The City may provide an electronic conversion service for a fee in the amount set forth by City Council resolution. The CDP Director shall provide a schedule indicating which documents must be provided electronically, at which point during the approval process, and other information as necessary to implement an electronic archiving program. Further, each modular component shall bear the decal of the Texas Department of Labor and Standards.

Further, Article VII, Signs, is hereby amended by the amendment of **Section 7.07**, Structural Requirements, Subsection (A), so that hereafter said subsection shall be and read as follows:

A. Design and Stress Diagrams Required. Before a sign permit shall be granted, the applicant therefor shall submit to the Building Official a design and stress diagram or plan containing information as to the type, size, shape, location, construction and materials of the proposed sign, and such other pertinent information as the Building Official may deem necessary to determine that such sign complies with this Building Code and all other pertinent laws. Final plans or other documents that will be archived must be submitted in an electronic format specified by the Director of Community Development and Planning ("CDP Director") as a condition to issuance of any type of permit, approval, or other action related to the final plans or documents. The City may provide an electronic conversion service for a fee in the amount set forth by City Council resolution. The CDP Director shall provide a schedule indicating which documents must be provided electronically, at which point during the approval process, and other information as necessary to implement an electronic archiving program.

Further, Article X, Emergency Locator Directory, is hereby amended by the amendment of **Section 10.04**, Information Required, so that hereafter said section shall be and read as follows:

Section 10.04 Information Required

A. The information required to be filed with the Building Official by Section 10.02 above shall include a site map drawn to a scale designated by the Building Official showing the designation and location of the following: buildings; the number or letter designation of said buildings, if any; internal street and driveway patterns; parking areas; access ways to interior courts; exterior stairways; dwelling units and their exterior doorways; the number or letter designation of said units; utility controls; and such other pertinent information as the Building Official may deem necessary. The Building Official shall provide appropriate forms for the compiling of said information and shall prescribe the manner of submitting the same.

B. Final plans or other documents that will be archived must be submitted in an electronic format specified by the Director of Community Development and Planning ("CDP Director") as a condition to issuance of any type of permit, approval, or other action related to the final plans or documents. The City may provide an electronic conversion service for a fee in the amount set forth by City Council resolution. The CDP Director shall provide a schedule indicating which documents must be provided electronically, at which point during the approval process, and other information as necessary to implement an electronic archiving program.

Further, **Article XIII**, Outdoor Festivals, is hereby amended by the **deletion** of **Section 13.11**, Penalty.

Further, **Article XVI**, Dangerous Buildings, is hereby amended by the amendment of **Section 16.11**, Other Enforcement, Subsection (E), so that hereafter said subsection shall be and read as follows:

E. It is a violation for any person, firm or corporation to own, lease, use, occupy or maintain a dangerous building as defined in this Article, or to cause or permit the same to be done, in the City of Arlington. A violator shall be guilty of a misdemeanor punishable by a fine not to exceed Two Thousand Dollars and No Cents ($2,000) for each violation pursuant to the penalties provisions of Section 19.01 of this Chapter.

Further, the "**Construction**" Chapter of the Code of the City of Arlington, Texas, 1987, is hereby amended by the addition of **Article XIX**, Penalty, so that hereafter said section shall be and read as follows:

ARTICLE XIX

PENALTY

19.01 Penalty

A person who violates any provision of this Chapter by performing an act prohibited or by failing to perform an act required is guilty of a misdemeanor; each day the violation continues shall be a separate offense.

1. If the definition of an offense under this Chapter does not prescribe a culpable mental state, then a culpable mental state is not required. Such offense shall be punishable by a fine not to exceed Five Hundred Dollars and No Cents ($500.00). Although not required, if a culpable mental state is in fact alleged in the charge of the offense and the offense governs fire safety, zoning, or public health and sanitation, including dumping of refuse, such offense shall be punishable by a fine not to exceed Two Thousand Dollars and No Cents ($2,000.00).

2. If the definition of an offense under this Chapter prescribes a culpable mental state and the offense governs fire safety, zoning, or public health and sanitation, including dumping of refuse, then a culpable mental state is required and the offense shall be punishable by a fine not to exceed Two Thousand Dollars and No Cents ($2,000.00).

2.

Any person, firm, corporation, agent or employee thereof who violates any of the provisions of this ordinance shall be guilty of a misdemeanor and upon conviction thereof shall be fined an amount not to exceed Two Thousand Dollars and No Cents ($2,000.00) for each offense. Each day that a violation is permitted to exist shall constitute a separate offense.

3.

This ordinance shall be and is hereby declared to be cumulative of all other ordinances of the City of Arlington; and this ordinance shall not operate to repeal or affect any of such other ordinances except insofar as the provisions thereof might be inconsistent or in conflict with the provisions of this ordinance, in which event such conflicting provisions, if any, in such other ordinance or ordinances are hereby repealed.

4.

If any section, subsection, sentence, clause or phrase of this ordinance is for any reason held to be unconstitutional, such holding shall not affect the validity of the remaining portions of this ordinance.

5.

All of the regulations provided in this ordinance are hereby declared to be governmental and for the health, safety and welfare of the general public. Any member of the City Council or any City official or employee charged with the enforcement of this ordinance, acting for the City of Arlington in the discharge of his/her duties, shall not thereby render himself/herself personally liable; and he/she is hereby relieved from all personal liability for any damage that might accrue to persons or property as a result of any act required or permitted in the discharge of his/her said duties.

6.

Any violation of this ordinance can be enjoined by a suit filed in the name of the City of Arlington in a court of competent jurisdiction, and this remedy shall be in addition to any penal provision in this ordinance or in the Code of the City of Arlington.

7.

The caption and penalty clause of this ordinance shall be published in a newspaper of general circulation in the City of Arlington, Texas, in compliance with the provisions of Article VII, Section 15, of the City Charter. Further, this ordinance may be published in pamphlet form and shall be admissible in such form in any court, as provided by law.

8.

This ordinance shall become effective upon second publication.

PRESENTED AND GIVEN FIRST READING on the 15th day of December, 2009, at a regular meeting of the City Council of the City of Arlington, Texas; and GIVEN SECOND READING, passed and approved on the 12th day of January, 2010, by a vote of 9 ayes and 0 nays at a regular meeting of the City Council of the City of Arlington, Texas.

ROBERT N. CLUCK, Mayor

ATTEST:

KAREN MAHAN, City Secretary

APPROVED AS TO FORM:
JAY DOEGEY, City Attorney

BY _____

01/10/11
01/17/11

Ordinance No. 11-001

An ordinance of the City of Arlington, Texas, amending the "Construction" Chapter of the Code of the City of Arlington, Texas, 1987, through the amendment of Article XIII, Outdoor Festivals; providing for a fine of up to $2,000 for each violation; providing this ordinance be cumulative; providing for severability, governmental immunity, injunctions, and publication; and becoming effective upon second publication

BE IT ORDAINED BY THE CITY COUNCIL OF THE CITY OF ARLINGTON, TEXAS:

1.

That the "**Construction**" Chapter of the Code of the City of Arlington, Texas, 1987, is hereby amended through the amendment of **Article XIII**, Outdoor Festivals, so that hereafter the **title** and Article shall be and read as follows:

ARTICLE XIII

TEMPORARY OUTDOOR EVENTS

Section 13.01 Purpose

The purpose of this Chapter is to promote the health, safety, and welfare of City of Arlington citizens and visitors by addressing issues that occur when private property is used for temporary outdoor events.

Section 13.02 Definitions

The following words, terms and phrases, when used in this Ordinance, shall have the meanings ascribed to them in this section, except where the context clearly indicates a different meaning:

Administrator. The Building Official or other designee of the City Manager charged with the administration and enforcement of this Article.

Amplified Sound. Music, speech or sound projected or transmitted by artificial means, including but not limited to amplifiers, loud speakers or any similar devices that emit sound distinctly discernible beyond the property line of the premises where the equipment is located.

Appeal Officer. The Director of Community Development and Planning or other designee of the City Manager charged with hearing appeals related to the enforcement of this Article.

Applicant. A person or its authorized agent that applies for a temporary outdoor event permit.

Non-Seasonal Temporary Outdoor Event. A temporary outdoor event that occurs independently of a particular season of the calendar year, including but not limited to: events related to religious institutions, schools, or other non-profit organizations.

Person. An individual, proprietorship, partnership, corporation, association, or other legal entity.

Seasonal temporary outdoor event. A temporary outdoor event occurring at or dependent on a particular season or holiday of the calendar year, including but not limited to: pumpkin stands, firewood sales, and Christmas tree lots.

Temporary outdoor event. Any activity not located within a permanent structure involving amplified sound; erection of tents; or sales of merchandise, goods or food and beverage; or similar activity.

Section 13.03 <u>General Authority and Duty of the Administrator</u>

The Administrator shall implement and enforce this Chapter.

Section 13.04 <u>Permit Required</u>

A. No applicant may direct, control or participate in the production of a temporary outdoor event unless a valid permit for the event has been issued as provided in this Article.

B. No person may direct, control or participate in the production of temporary outdoor event in violation of the terms and conditions of a valid permit issued in accordance with this Article.

C. Nothing contained herein shall be construed as relieving an applicant from duties or permits required by other provisions of the Code of the City of Arlington, including, but not limited to, ordinances regulating the sale of food and beverage or closure of streets and the obtaining of permits and payment of fees.

Section 13.05 <u>Application for Permit</u>

A. A person desiring to hold a temporary outdoor event shall file a written permit application with the Administrator.

B. The application must be filed at least forty-five (45) days before the day the temporary outdoor event is to be held. Failure to meet the filing requirement may result in denial of the application. This requirement may be waived by the Administrator if all other conditions of this Article are met.

C. The Administrator may require submittal of the following:

1. The name, telephone numbers and address of the applicant and the names, addresses, and telephone numbers of all associates and employees of the applicant assisting in the promotion of the temporary outdoor event.

2. A description and the address of the premises where the temporary outdoor event is to be held.

3. The name and address of the owner of the premises where the temporary outdoor event is to be held and a letter of permission from the owner whereby the applicant is authorized to use the location.

4. A letter from the owner(s) of the premises acknowledging responsibility for cleaning up the property and surrounding rights-of-way as may be applicable, including charges assessed by the City for expenses incurred by the City. A bond for cleanup may be required by the City. The owner shall provide an address and telephone numbers where he or she may be contacted.

5. The dates and times that the temporary outdoor event is to be held, including any setup or takedown time for tents, booths, tables, stages, bandstands, platforms or other temporary structures.

6. The maximum number of persons that the applicant will allow to attend the temporary outdoor event and a statement showing how the applicant plans to control the number of persons in attendance at the temporary outdoor event.

7. A detailed statement describing the applicant's preparations for the temporary outdoor event designed to comply with the minimum standards of sanitation and health protection measures required by V.T.C.A., Health and Safety Code, Chapter 341, to include but not be limited to restrooms, gratis drinking water and shade structures. In addition, provisions for emergency medical and health care services may be required by the City.

8. A detailed statement describing the applicant's preparations for the temporary outdoor event designed to comply with the standards for a Certificate of Occupancy and all other requirements of the applicable Chapters of the Code of the City of Arlington, including but not limited to the provisions of the "Fire Prevention" and "Zoning" Chapters of said Code.

9. A complete listing of similar temporary outdoor events the applicant has received permits for in the past three (3) years, including the date, time, and location of each.

10. Any other information to determine whether the event will jeopardize the health, safety, and welfare of City of Arlington citizens and visitors.

D. The required filing fee set in accordance with Section 4.09 above must be submitted with the application. The fee shall be nonrefundable.

Section 13.06 <u>Application Review Procedure</u>

A. The application for a permit under this Article shall be reviewed by the Administrator. Such application may also be reviewed by other departments of the City to check compliance with the laws and ordinances under their jurisdiction.

B. Reviewing departments may make a written report to the Administrator. The report shall state whether the preparations described in the application, if carried out, would be sufficient to protect the community and the persons attending the temporary outdoor event from health dangers, public safety and traffic control hazards, and to avoid violations of V.T.C.A., Health and Safety Code, Chapter 341.

Section 13.07 <u>Conditions for Permit</u>

A. The following conditions and restrictions shall apply to all temporary outdoor events:

1. Temporary outdoor sale or distribution of merchandise, goods or food and beverage shall only be conducted by the existing occupants of existing businesses on the property where the sales will be held. The merchandise, goods or food and beverage sold or distributed shall be limited to those items sold or distributed in the ordinary course of business at the location for which a Certificate of Occupancy has been issued.

2. The Administrator may impose restrictions on any activity that appears likely to create a risk of unreasonable harm to the public including the following: fires; fireworks; amplified sound; the use of alcoholic beverages; dancing; sports; the use of animals, equipment or vehicles; the number of persons to be present; or the location of any bandstand, platform, tent or stage.

3. If an event takes place on public property, including street right-of-way, the applicant shall carry a minimum of $500,000 per occurrence in commercial general liability insurance naming the City of Arlington, their officers, agents, and employees as additional insured for claims occurring in City rights-of-way. The applicant shall also pay a reasonable deposit of Security or provide a bond for the repair of any damage to City of Arlington property, the cost of cleanup, or both when so determined by tbe City.

4. The applicant shall furnish additional sanitary and refuse facilities that might be reasonably necessary based on the use or activity for which the permit is being sought.

5. Any tents, booths, tables, stages, bandstands, platforms or other temporary structures must be set back from the street curb by a minimum of twenty (20) feet, and must be within fifty (50) feet of the business front facade.

6. The number of temporary outdoor events that can be held by one applicant is limited to eighteen (18) per calendar year. The Administrator may allow an applicant to host additional temporary outdoor events if the event complies with this Article and does not jeopardize the health, safety, and welfare of the public.

B. In addition to the requirements in Subsection (A) above, the following conditions and restrictions shall apply to all seasonal temporary outdoor events:

1. The duration of the permit shall be for a period not exceeding forty (40) days prior to the event and two days after the event.

2. Tents, booths, tables, stages, bandstands, platforms or other temporary structures shall not be erected in any easements, fire lanes or required parking spaces.

C. In addition to the requirements in Subsection (A) above, the following conditions and restrictions shall apply to all non-seasonal temporary outdoor events:

1. The duration of tbe permit shall be limited to seventy-two (72) consecutive hours.

2. Tents, booths, tables, stages, bandstands, platforms or other temporary structures shall not be erected in any easements, fire lanes or required parking spaces.

Section 13.08 <u>Denial of Permit; Grounds; Revocation</u>

A. Any application for a temporary outdoor event shall be granted to an applicant by the Administrator unless the Administrator finds that:

1. False or misleading information is contained in the application or required information is omitted;

2. The applicant does not have sufficient financial backing or stability to carry out the preparations specified in the application or to insure the faithful performance of his agreements;

3. The preparations specified in the application are insufficient to protect the community or the persons attending the event from health dangers or to avoid violations of V.T.C.A., Health and Safety Code, Chapter 341;

4. The times and place for the temporary outdoor event create a substantial danger of traffic or pedestrian congestion and disruption of other lawful activities;

5. The preparations specified in the application are insufficient to limit the number of persons in attendance at the temporary outdoor event to the maximum number stated in the application;

6. The applicant does not have adequate agreements with performers to insure with reasonable certainty that the persons advertised to perform would appear;

7. The preparations specified in the application fail to meet the requirements for a Certificate of Occupancy and all other requirements of the applicable Chapters of the Code of the City of Arlington, including but not limited to the provisions of the "Fire Prevention" and "Zoning" Chapters of said Code;

8. The temporary outdoor event would violate any applicable federal, state, or municipal law;

9. The preparations fail to meet the conditions which the Administrator has required pursuant to Section 13.05 above; or

10. The proposed temporary outdoor event would conflict with another event regulated by this article.

11. The applicant has failed to pay past fees associated with an Outdoor Festival or temporary outdoor event.

12. Within the previous twelve (12) months, the applicant violates a provision of this Article or any federal, state, or local laws and ordinances during a temporary outdoor event.

B. After notice to the applicant, the Administrator or an official of the Police, Fire, or Environmental Health Departments may revoke the permit on a finding that the preparations for the temporary outdoor event will not be carried out as stated in the application or the conditions imposed by the permit will not be met.

Section 13.09 <u>Permit Denial or Revocation Hearing</u>

A. Every denial or revocation of a permit under this Article shall be in writing and shall state the reason for such action. Said notice shall immediately be sent to the applicant/permittee by certified mail, or shall be personally delivered to such person.

B. Any applicant/permittee may, within ten (10) business days after the date of the notice provided for in Subsection (A) above, submit to the Administrator a written request for a hearing to show cause as to why the permit should be granted or should not be revoked, as the case may be. Such request shall not stay the denial or revocation. A hearing shall be scheduled within ten (10) business days of such request and notice of the hearing shall be given to all affected parties.

C. Following the hearing, the Administrator shall render a written decision granting or denying the application, or reinstating or revoking the permit, as the case may be.

D. An appeal of the Administrator's decision in Subsection (C) above may be made in writing to the Appeal Officer within ten (10) business days of the date of said decision. A hearing shall be set within ten (10) business days of receipt of the request for appeal and notice of the hearing shall be given to all affected parties.

E. Any decision of the Administrator under Subsection (C) above which is not appealed shall be final. Any person, firm or corporation aggrieved by a decision of the Appeal Officer may present to a court of record a petition, duly verified, setting forth that such decision is illegal in whole or in part, and specifying the grounds of the illegality. Unless such petition is filed with said court within ten (10) business days of the decision of the Appeal Officer, the decision shall become final.

Section 13.10 Permit Posting

Permits required by this Article shall be publicly posted in the area where the activity is conducted or produced, and shall be exhibited upon demand to any law enforcement officer or City ordinance enforcement official. The posted permit shall have emergency contact information for the person(s) responsible for the operation of the temporary outdoor event.

Section 13.11 Exception

The provisions of this Article shall not apply if the location of the temporary outdoor event is either (a) one for which a Certificate of Occupancy has already been granted and/or a final inspection, as applicable, has already occurred if the event is held in an individual dwelling unit; or (b) a major sports complex, as defined in the "Zoning" Chapter of the Code of the City of Arlington or a (c) City Park as defined by the Parks Chapter of the Code of the City of Arlington.

2.

Any person, firm, corporation, agent or employee thereof who violates any of the provisions of this ordinance shall be guilty of a misdemeanor and upon conviction thereof shall be fined an amount not to exceed Two Thousand Dollars and No Cents ($2,000.00) for each offense. Each day that a violation is permitted to exist shall constitute a separate offense.

3.

This ordinance shall be and is hereby declared to be cumulative of all other ordinances of the City of Arlington, and this ordinance shall not operate to repeal or affect any of such other ordinances except insofar as the provisions thereof might be inconsistent or in conflict with the provisions of this ordinance, in which event such conflicting provisions, if any, in such other ordinance or ordinances are hereby repealed.

4.

If any section, subsection, sentence, clause or phrase of this ordinance is for any reason held to be unconstitutional, such holding shall not affect the validity of the remaining portions of this ordinance.

5.

All of the regulations provided in this ordinance are hereby declared to be governmental and for the health, safety and welfare of the general public. Any member of the City Council or any City official or employee charged with the enforcement of this ordinance, acting for the City of Arlington in the discharge of his/her duties, shall not thereby render himself/herself personally liable; and he/she is hereby relieved from all

personal liability for any damage that might accrue to persons or property as a result of any act required or permitted in the discharge of his/her said duties.

6.

Any violation of this ordinance can be enjoined by a suit filed in the name of the City of Arlington in a court of competent jurisdiction, and this remedy shall be in addition to any penal provision in this ordinance or in the Code of the City of Arlington.

7.

The caption and penalty clause of this ordinance shall be published in a newspaper of general circulation in the City of Arlington, Texas, in compliance with the provisions of Article VII, Section 15, of the City Charter. Further, this ordinance may be published in pamphlet form and shall be admissible in such form in any court, as provided by law.

8.

This ordinance shall become effective upon second publication.

PRESENTED AND GIVEN FIRST READING on the 14th day of December, 2010, at a regular meeting of the City Council of the City of Arlington, Texas; and GIVEN SECOND READING, passed and approved on the 4th day of January, 2011, by a vote of 9 ayes and 0 nays at a regular meeting of the City Council of the City of Arlington, Texas.

ROBERT N. CLUCK, Mayor

ATTEST:

MARY W. SUPINO, City Secretary

APPROVED AS TO FORM:
JAY DOEGEY, City Attorney

BY

Ordinance No. 11-019

An ordinance amending the "Construction" Chapter of the Code of the City of Arlington, Texas, 1987, through the amendment of Article I, Building Code, Section 1.04, Amendments, Additions and Deletions, by the amendment of Subsection (D)(3), relative to adding the definition of "Reclaimed Water"; providing for a fine of up to $2,000 for each offense in violation of the ordinance; providing this ordinance be cumulative; providing for severability, governmental immunity, injunctions, and publication; and becoming effective thirty days after final adoption of the ordinance at the second reading on March 22, 2011

BE IT ORDAINED BY THE CITY COUNCIL OF THE CITY OF ARLINGTON, TEXAS:

1.

That the "**Construction**" Chapter of the Code of the City of Arlington, Texas, 1987, is hereby amended through the amendment of Article I, Building Code, **Section 1.04**, Amendments, Additions and Deletions, by the amendment of Subsection (D)(3), so that hereafter said subsection shall read as follows:

(3) The amendment of I.R.C. Section R202, entitled Definitions., to revise the definition of "Townhouse" and add the definitions of "Naturally Durable Wood" and "Reclaimed Water" to read as follows:

TOWNHOUSE. A single-family dwelling unit constructed in a group of attached units separated by property lines in which each unit extends from foundation to roof and with open space on at least two sides.

NATURALLY DURABLE WOOD. The heartwood of the following species with the exception that an occasional piece with corner sapwood is permitted if 90 percent or more of the width of each side on which it occurs is heartwood.

Decay resistant. Redwood, cedars, black locust and black walnut.

Termite resistant. Redwood and Eastern red cedar.

RECLAIMED WATER. Wastewater, collected and treated at a wastewater treatment plant, which has been treated to a quality that meets or exceeds the requirements of the Texas Commission on Environmental Quality's Chapter 210 authorization to the City.

2.

Any person, firm, corporation, agent or employee thereof who violates any of the provisions of this ordinance shall be guilty of a misdemeanor and upon conviction thereof shall be fined an amount not to exceed Two Thousand and No/100 Dollars ($2,000) for each offense. Each day that a violation is permitted to exist shall constitute a separate offense.

3.

This ordinance shall be and is hereby declared to be cumulative of all other ordinances of the City of Arlington; and this ordinance shall not operate to repeal or affect any of such other ordinances except insofar as the provisions thereof might be inconsistent or in conflict with the provisions of this ordinance, in which event such conflicting provisions, if any, in such other ordinance or ordinances are hereby repealed.

4.

If any section, subsection, sentence, clause or phrase of this ordinance is for any reason held to be unconstitutional, such holding shall not affect the validity of the remaining portions of this ordinance.

5.

All of the regulations provided in this ordinance are hereby declared to be governmental and for the health, safety and welfare of the general public. Any member of the City Council or any City official or employee charged with the enforcement of this ordinance, acting for the City of Arlington in the discharge of his/her duties, shall not thereby render himself/herself personally liable; and he/she is hereby relieved from all personal liability for any damage that might accrue to persons or property as a result of any act required or permitted in the discharge of his/her said duties.

6.

Any violation of this ordinance can be enjoined by a suit filed in the name of the City of Arlington in a court of competent jurisdiction, and this remedy shall be in addition to any penal provision in this ordinance or in the Code of the City of Arlington.

7.

The caption and penalty clause of this ordinance shall be published in a newspaper of general circulation in the City of Arlington, Texas, in compliance with the provisions of Article VII, Section 15, of the City Charter. Further, this ordinance may be published in pamphlet form and shall be admissible in such form in any court, as provided by law.

8.

Section 214.218 of the Texas Local Government Code requires that adoption of an ordinance or national model code provision that is intended to govern the construction, renovation, use, or maintenance of buildings and building systems in the City shall have a delayed effective date that will delay implementing and enforcing the ordinance or code provision for at least 30 days after final adoption of the ordinance, to permit persons affected to comply with the ordinance or code provision.

9.

This ordinance shall become effective thirty days after final adoption of the ordinance at the second reading on March 22, 2011.

PRESENTED AND GIVEN FIRST READING on the 1st day of March, 2011, at a regular meeting of the City Council of the City of Arlington, Texas; and GIVEN SECOND READING, passed and approved on the 22nd day of March, 2011, by a vote of 9 ayes and 0 nays at a regular meeting of the City Council of the City of Arlington, Texas.

ROBERT N. CLUCK, Mayor

ATTEST:

MARY W. SUPINO, City Secretary

APPROVED AS TO FORM:
JAY DOEGEY, City Attorney

BY _____

Ordinance No. 11-043

An ordinance amending the "Construction" Chapter of the Code of the City of Arlington, Texas, 1987, through the addition of a new Article XIX, Construction on Lake Arlington, and the renumbering of the remaining Article; providing for a fine of up to $500 for each offense in violation of the ordinance; providing that this ordinance be cumulative, providing for severability, governmental immunity, injunctions, publication and becoming effective on September 1, 2011

BE IT ORDAINED BY THE CITY COUNCIL OF THE CITY OF ARLINGTON, TEXAS:

1.

That the **"Construction"** Chapter of the Code of the City of Arlington, Texas, 1987, is hereby amended through the addition of a **new Article XIX,** Construction on Lake Arlington, and the **renumbering of the remaining Article,** so that hereafter said Article XIX shall read as follows:

ARTICLE XIX

CONSTRUCTION ON LAKE ARLINGTON

Section 19.01 Definitions

"Boathouse" means any unenclosed covered structure or attached appurtenance which is used for the temporary or permanent storage of watercraft or personal property on or over the water.

"Earthwork" means the disturbance of soils associated with filling, clearing, grading or excavation.

"Facilities" mean any building, boathouse, pier or other structure or any combination of structures.

"Lake Arlington" means all of the waters within the Lake Arlington reservoir area that are located within the corporate limits of the City of Arlington.

"Lake Arlington Flowage Easement or Flowage Easement" shall have the meaning assigned by the Lake Arlington Chapter.

"Lake Arlington Reservoir Area or Reservoir Area" shall have the meaning assigned by the Lake Arlington Chapter.

"License agreement" shall have the meaning as assigned by the Lake Arlington Chapter.

"Person" means any natural person, association of persons, partnership, corporation, agent or officer, or other entity.

"Pier" means any pier, wharf, boat dock, gangway, or other platform or structure in or adjoining the water to which vessels may be moored, by which they may be boarded, or on which persons may walk or sit.

"Shoreline" means the edge of the water as established by the 550 foot elevation.

"Shoreline Restoration" shall have the meaning as assigned by the Lake Arlington Chapter.

"Walkways and bridges" means the constructed pedestrian facilities for the purpose of connecting piers and boathouses to the property. Walkways and bridges are located above the 550 feet elevation.

Section 19.02 <u>Permits Required</u>

No person shall erect, construct, enlarge, alter, repair, remove, convert or demolish any retaining wall, walkway, boathouse, or pier; or to excavate, grade, or fill property or cause the same to be done on any property located within the Lake Arlington Flowage Easement or in the Lake Arlington Reservoir Area without first obtaining a permit in accordance with Article IV of this Chapter. No person shall erect, construct or convert any retaining wall, walkway, boathouse, or pier; or to excavate, grade, or fill property or cause the same to be done on any property located within the Lake Arlington Reservoir Area except for structure support poles, piers, anchors or rip rap for slope stabilization. The building official may only issue a permit upon finding that the proposed work complies with the construction standards in this Article and with the building codes as may be applicable. The building official may not issue a permit for any work proposed for new or existing boathouses or piers or other structures unless there is a current annual license agreement approved by the Lake Ordinance Administrator as required in the Lake Arlington Chapter.

Contractors performing work in or on the Lake Arlington Reservoir Area must have on file Contractor's Public Liability Insurance with a combined single limit of not less than Five Hundred Thousand and No/100 Dollars ($500,000.00) per occurrence, with an aggregate of not less than Five Hundred Thousand and No/100 Dollars ($500,000.00). The Registrant shall make the City of Arlington a Certificate Holder and present proof of insurance at the time of registration and all subsequent renewals. Notice of policy cancellations or failure to renew coverage shall be cause for revocation of registration, denial of inspections or cancellation of permits.

In the event provisions in this article conflict with any other provisions in the City Code, the stricter of the two requirements shall take precedent.

Section 19.03 <u>Earthwork</u>

A. Prior to performing any earthwork within the Lake Arlington Reservoir Area or Flowage Easement, a site plan must be submitted for review and accepted. Permanent structures proposed with the site plan, such as retaining walls, boathouses or piers require a construction permit in accordance with Article IV of this Chapter.

B. The following items shall be included with the site plan submittal:

1. Description of the work.

2. Plan prepared by a licensed Professional Engineer showing existing and proposed grades (topography), easements and structures where applicable. Existing topography shall bc verified by a Registered Public Land Surveyor.

3. Cross-section(s) of any proposed excavation or fill at intervals sufficient to determine the volume of earth to be placed within or removed from the Flowage Easement.

4. Earthwork calculations demonstrating the volume of fill to be placed within the Flowage Easement and/or Lake Arlington.

5. Copy of 404 permit from the U.S. Army Corps of Engineers, as necessary.

C. Plans which show that the work has been completed as originally intended on the approved site plan (Record Drawings) must be provided and accepted upon completion of earthwork activities. The record drawing must include a verification statement or seal prepared by a Registered Public Land Surveyor.

Section 19.04 <u>Design and Construction Requirements for Retaining Walls</u>

A. Engineering design requirements.

1. All retaining wall plans must be designed and sealed by a licensed professional engineer.

2. If any part of the retaining wall is located at or below 560 feet above mean seal level, then the design and construction of the entire retaining wall must comply with this Article.

3. The height of a retaining wall is measured from the bottom of the footing or foundation to the top of the wall.

4. Retaining walls shall be constructed in stepped or terraced design. The maximum exposed height for a retaining wall that is located closest to the water's edge shall be no more than six (6) feet. Subsequent terraced retaining walls shall be no more than four (4) feet in height.

   EXCEPTION. If physical limitations on the site or structural engineering conditions make terracing technically unfeasible. In any case the maximum height of any retaining wall or retaining wall segment is six (6) feet.

5. When walls are terraced, the upper wall shall be separated from the lower wall by a minimum of five (5') feet measured horizontally.

6. A bio-retention planting strip is required in the areas between terraced retaining walls and behind the top of the upper retaining wall. The planting strip shall be a minimum five feet (5') from the back and top of the retaining wall for the entire width of the retaining wall. The bio-retention planting strip shall be planted with deep rooted native or adapted grasses, ground cover and /or shrubs. Approved Lake Arlington Planting Materials are listed in the Lake Arlington Chapter and below.

Table 19A - Approved Lake Arlington Planting Materials		
Buffalo Grass	Bouteloua dactyloides	grass
Indian Paintbrush	Castilleja indivisa	grass
Plains coreopsis	Coreopsis lanceolata	grass
Lindheimer's Muhly	Muhlenbergia lindheimeri	grass
Indian Blanket	Gaillardia pulchella	grass
Annual Phlox	Phlox drummondii	grass
Island Sea Oats	Chasmanthium latifolium	tall grass
Purple Cone Flower	Echinacea pallida	tall grass
Black-eyed Susan	Rudbekia hirta	tall grass
Maidenhair Fern	Adiantum capillus-veneris	ground cover
Frogfruit	Phyla nodiflora	ground cover
Spiderwort	Tradescantia spp.	ground cover
Wax Myrtle	Myrica cerifera	shrub
Dwarf Palmetto	Sabal minor	shrub
Turk's Cap	Malvaviscus arboreus var. drummondii	shrub

B. Retaining wall materials.

1. The following materials are approved for the construction or veneer of retaining walls:

   a. Interlocking masonry, stone, or brick;

   b. Poured decorative concrete; and

   c. Aesthetic sheet piling designed specifically for shoreline retaining walls.

2. Rock gabion or rock rip-rap is required at the exposed foot of the lowest retaining wall and may only extend one foot above and below the foot of the wall. Rock or rip-rap shall consist of rocks ranging in sizes from eight inches in diameter to twelve inches in diameter and must be installed over a non-woven structural fabric.

3. The following materials are expressly prohibited for the construction or veneer of retaining walls:

   a. concrete bags;

   b. plain concrete

   c. reclaimed or broken concrete;

   d. commercial sheet piles;

   e. other metal; or

   f. wood.

Section 19.05 <u>Design and Construction Requirements for Piers and Boathouses</u>

A. All piers and boathouse in Lake Arlington shall be considered accessory structures. A primary structure must be present on the lot to which a pier, boathouse and/or walkway is erected or constructed.

B. All piers and boathouses must be designed and sealed by a licensed professional engineer. The following specific criteria must be incorporated in the engineer's design and be included on the construction documents:

1. All piers and/or boathouses shall be designed to withstand the loads as specified in the Building Code,

2. All piers and/or boathouses shall be designed to withstand a minimum of four foot high wave action and the design wind load simultaneously;

3. Designs shall include the impacts of wind and wave action effects of boats attached to the pier and/or boathouse.

4. Floating piers and boathouses shall be designed with anchorage footing and piers to remain in place to prevent the structure from floating or rising above the 560' elevation;

5. Cables and chains used in anchoring systems shall be designed with a minimum working load safety factor of 3.0 for cables and 2.0 for chains;

6. Flotation devices for boathouses, walkways and bridges shall be designed and/or manufactured to support the dead load and live load as a fixed structure.

C. Building zone width. The building zone width is determined by the extension of the side property lines of a lot into the lake less the required minimum side setback. Minimum side setbacks for piers and boathouses from the extended side property lines are as set forth in Table 19B – Buildable Zone Width. See Figure 19A – Buildable Zone Width for illustration purposes.

Table 19B – Buildable Zone Width

LOT WIDTH	MIN SIDE SET BACK
Less than 50 feet	5 feet
50 feet to 69 feet	10 feet
70 feet to 99 feet	15 feet
100 feet or more	20 feet

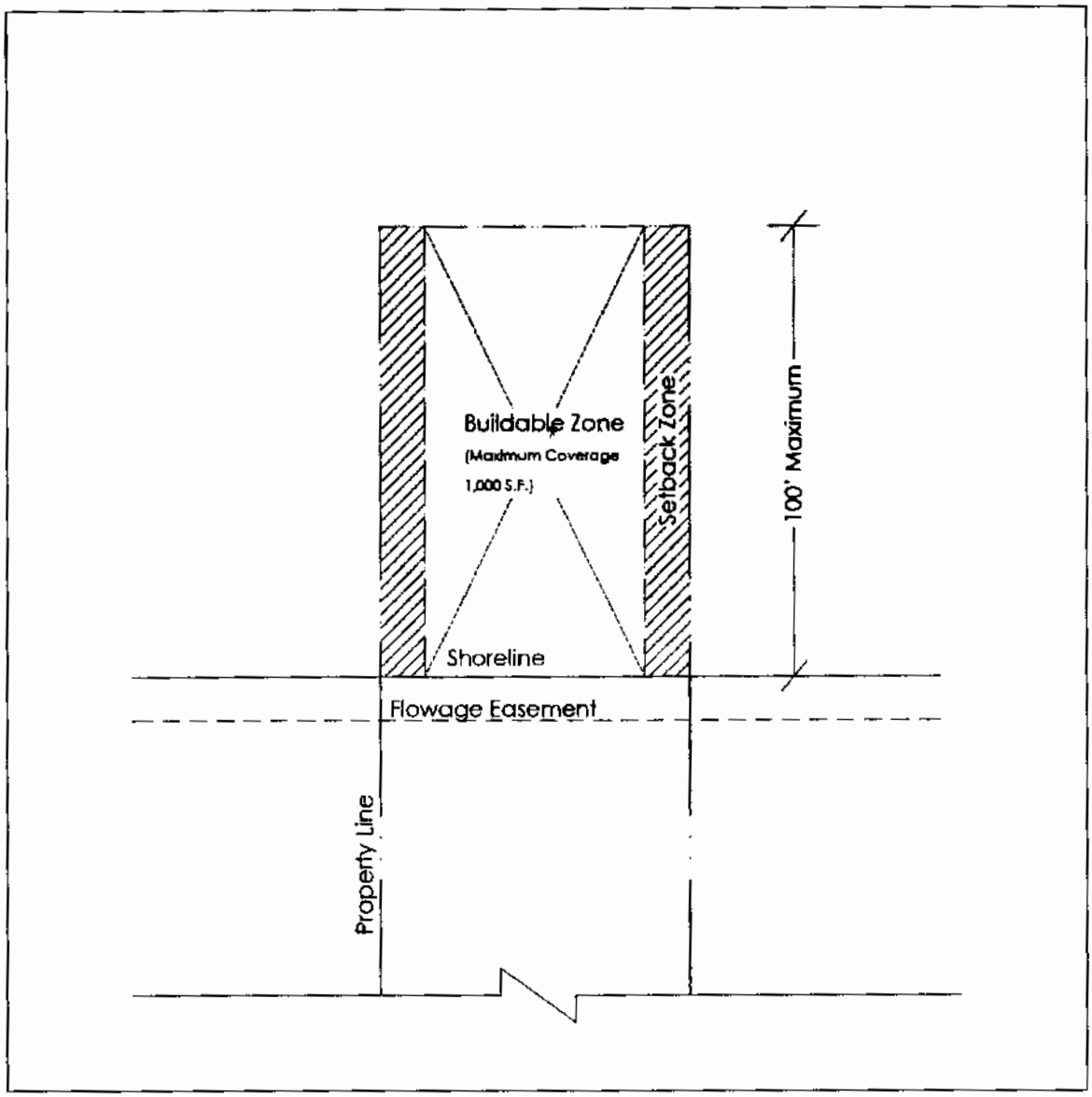

Figure 19A – Buildable Zone Width Illustration

D. Maximum structure area. The maximum horizontal area of structures incidental to a single property (piers and/or boathouses) is 1,000 square feet.

EXCEPTION: For property owners that remove existing retaining walls and provide shoreline restoration; or, for property owners that elect to preserve existing natural shoreline areas, the maximum area of structures may be 1,250 square feet. Shoreline Restoration and Preservation projects must comply with the Lake Arlington Chapter.

E. Maximum length into the Lake. Piers and/or boathouses shall not extend into the lake more than 100 feet from the shoreline.

EXCEPTIONS:

1. If the elevation of the Lake bottom at the 100 foot limit is higher than 545 feet above mean sea level then the dock may extend to the point where the Lake bottom is 545 feet above mean sea level to a maximum length of 150 feet as measured from the shoreline regardless of Lake Bottom elevation. This exception may not apply in narrow areas of the reservoir.

2. In narrow areas of the reservoir (See figure 19B – Map of Narrow Areas), no structure shall occupy more than one third (1/3) of the channel width and in no case shall a structure extend out into the reservoir to a point that is more than 20 feet from the centerline of the channel. For the purposes of this provision, the channel width is measured from water's edge at the normal lake elevation of 548 feet mean sea level. See Figure 19C – Narrow Channel Illustration.

3. For property owners that remove existing retaining walls to undergo a shoreline restoration effort; or, for property owners that elect to preserve existing natural shoreline areas the maximum length of a pier may be extended to 125 feet. This exception may not apply in narrow areas of the reservoir.

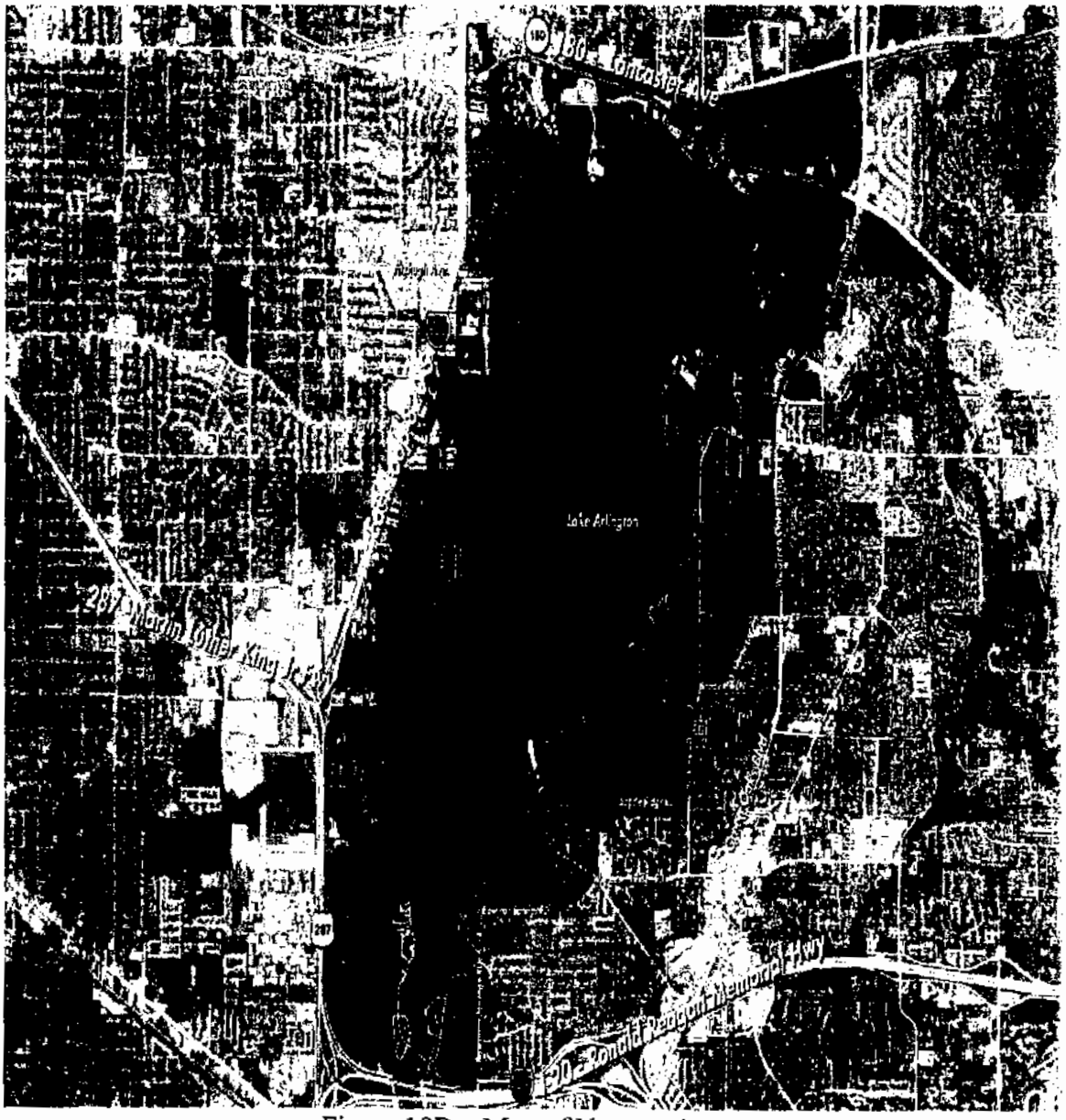

Figure 19B – Map of Narrow Areas

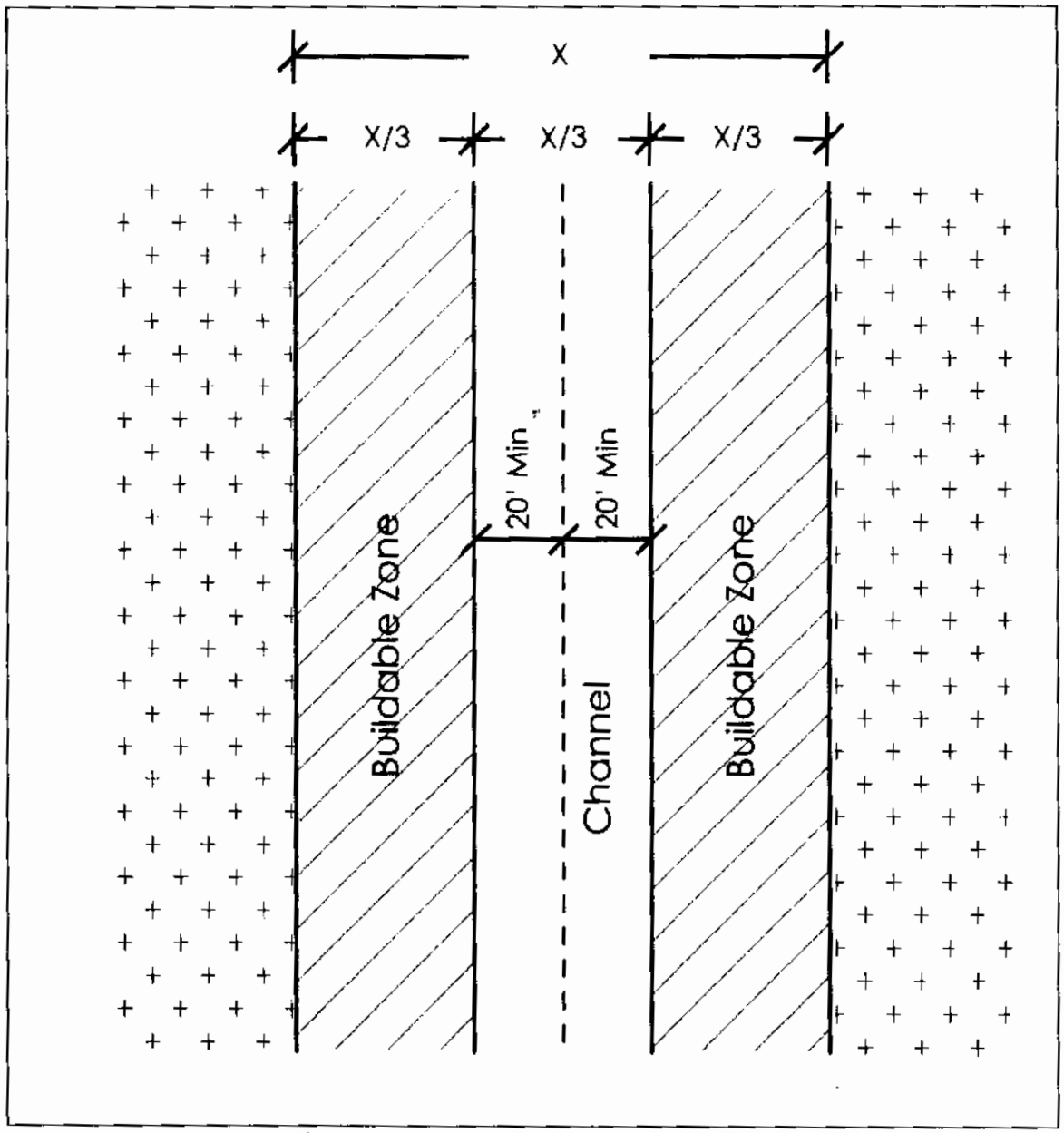

Figure 19C – Narrow Channel Illustration

F. All piers and boathouses shall have lights in accordance with this subsection. These requirements apply to any piers and boathouses that extend into the Lake more than eight feet from a shoreline measured perpendicular to the shoreline.

1. Piers and boathouses must be continuously lighted with amber lights between sunset and sunrise each day.

2. Piers and boathouses must have at least one light station. Except as otherwise provided in this subsection, the light station must be located on the end of the pier and/or boathouse and on the side that is farthest from and parallel to the shoreline. The light must be visible to a properly approaching watercraft.

3. A pier or boathouse that extend thirty feet or more from the shoreline must have at least one light station on each side of the pier and/or boathouse not facing the shoreline.

4. A pier or boathouse that extends fifty feet or more from the shoreline must have light stations from the shoreline to the end of the pier and /or boathouse at intervals of not more than twenty five feet except that a light station may not be located within eight feet of the shoreline.

5. Each light station required by this subsection must have a two-bulb fixture with two working light bulbs, between 7.5 and 25 watts. Light bulbs or covers must be amber and white light shall not radiate from the fixture. Light stations must be controlled by only a photoelectric cell to insure dusk to dawn continuous operation.

6. All electrical wiring on any pier and/or boathouse shall be in accordance with the City of Arlington electrical code for marine applications.

7. Other lights installed that are not required by this subsection may only cast light down and shall not cast light outward from the pier.

8. Any pier and/or boathouse that require lights under this subsection shall provide temporary lighting during construction and until the permanent lighting is installed.

G. Address. Each pier and/or boathouse shall have an address placard stating the street address and the street name of the primary residence associated with the structure. The address placard shall be clearly legible from the lake side of the structure. The lettering shall be a minimum of 6-inch high and be made of reflective material so that the address can be read at night. Placards shall be made of cast aluminum and be rectangular in shape.

H. Toilet. Toilet facilities of any type are prohibited on any boathouse or pier.

I. Water. The installation of a potable water line shall comply with the plumbing code.

J. Electrical. The installation of any electrical components shall comply with the electrical code.

K. Specific design requirements for boathouses.

1. Single Story. All boathouses are limited to a single story (lower deck) and a sundeck (upper deck) or roof.

2. Height. The maximum height of any boathouse is thirteen feet as measured vertically from the pier walking surface to the top plate line.

3. Pitch. The maximum pitch for any sloped roof is 3:12.

4. Roofs. Flat roofs shall have a minimum roof pitch of 1/2:12. The upper flat roof may be constructed for use as a sundeck. When the upper deck is utilized as a sundeck, the following regulations apply:

   a. The sundeck may not have a permanent roof or covering.

   b. The sundeck is accessible by stairway and handrails constructed in accordance with the building code.

   c. The sundeck area is protected with a surrounding guardrail constructed in accordance with the building code.

   d. Except for the required guardrails, no other vertical construction is permitted on the upper deck.

5. Enclosed boathouses are prohibited. Solid sides on the boathouse are permitted at a maximum of two feet downward from the top plate. No additional materials (i.e. lattice, fencing, bars, screen fabric, doors, glass, etc.) may be installed below the two foot sidewalls.

6. A single enclosed storage area is permitted only on the lower deck of a boathouse. The enclosed storage area may only be used for the purpose of storing items such as fishing tackle, skis and life jackets. Products considered hazardous material or any material which has a warning label prohibiting its use or storage near water and/or public water supplies is prohibited. The maximum area allowed for the enclosed storage shall be 32 square feet.

L. Design criteria for piers and/or boathouses.

1. The use of wood piles is prohibited;

2. Metal piles shall be a minimum of three inches inside diameter schedule 40 pipe. Such piles shall be driven to a by a pile hammer to a point of resistance. Such piles shall be driven in pairs, one on either side of the structure and braced. Such piles shall be spaced a maximum of twelve feet center to center.

3. Flotation structures shall be anchored with solid units that will provide the following anchorage:

a. All anchors shall be of masonry, concrete, or steel and shall be securely fastened to the pier or boathouse by cable, chain, or other approved methods.

b. All piers and boathouses shall be anchored to the shore line.

c. Piers less than fifty feet in length shall be anchored on each corner designed to support one-fourth of the total dead load plus one-eighth the total live load.

d. Piers fifty feet or more in length shall also be anchored at the midpoint of the pier.

4. Required Water Proofing: All wood below one foot above Flowage Easement elevation (560') shall be approved pressure-preservative-treated wood as defined in the building code. All metal, including bolts, lag bolts, and fasteners, shall be galvanized or factory painted and listed for immersion in water. Creosote treated wood is prohibited.

5. Floating structures and flotation. Flotation material shall be extruded polystyrene, expanded polystyrene, or a copolymer of polyethylene and polystyrene and have the following characteristics:

a. A minimum density of 0.9 pounds per cubic foot and be of consistent quality throughout the float.

b. Beads shall be firmly fused together with no voids inside the encasement.

c. Flotation material shall have a water absorption rate of less than 3.0 pounds per cubic foot over seven days when tested by the Hunt Absorption Test.

d. All flotation material shall be encased in solid polyethylene or a polyurethane type coating, both of which shall he watertight and have a nominal thickness of 0.125 inches.

e. Drums made of plastic or metal, whether new or recycled, are prohibited from use as an encasement or float.

f. All floats shall be warranted for a minimum of fifteen (15) years against sinking, becoming waterlogged, cracking, peeling, fragmenting, or losing beads, and shall not be prone to damage by animals.

M. Shoreline Restoration and Preservation. Shoreline Restoration and Preservation shall be conducted as provided for in the Lake Arlington Chapter.

2.

Any person, firm, corporation, agent or employee thereof who violates any of the provisions of this ordinance shall be guilty of a misdemeanor and upon conviction thereof shall be fined an amount not to exceed Five Hundred and No/100 Dollars ($500) for each offense. Each day that a violation is permitted to exist shall constitute a separate offense.

3.

This ordinance shall be and is hereby declared to be cumulative of all other ordinances of the City of Arlington; and this ordinance shall not operate to repeal or affect any of such other ordinances except insofar as the provisions thereof might be inconsistent or in conflict with the provisions of this ordinance, in which event such conflicting provisions, if any, in such other ordinance or ordinances are hereby repealed.

4.

If any section, subsection, sentence, clause or phrase of this ordinance is for any reason held to be unconstitutional, such holding shall not affect the validity of the remaining portions of this ordinance.

5.

All of the regulations provided in this ordinance are hereby declared to be governmental and for the health, safety and welfare of the general public. Any member of the City Council or any City official or employee charged with the enforcement of this ordinance, acting for the City of Arlington in the discharge of his/her duties, shall not thereby render himself/herself personally liable; and he/she is hereby relieved from all personal liability for any damage that might accrue to persons or property as a result of any act required or permitted in the discharge of his/her said duties.

6.

Any violation of this ordinance can be enjoined by a suit filed in the name of the City of Arlington in a court of competent jurisdiction, and this remedy shall be in addition to any penal provision in this ordinance or in the Code of the City of Arlington.

7.

The caption and penalty clause of this ordinance shall be published in a newspaper of general circulation in the City of Arlington, Texas, in compliance with the provisions of Article VII, Section 15, of the City Charter. Further, this ordinance may be published in pamphlet form and shall be admissible in such form in any court, as provided by law.

This ordinance shall become effective on September 1, 2011.

PRESENTED AND GIVEN FIRST READING on the 2nd day of August, 2011, at a regular meeting of the City Council of the City of Arlington, Texas; and GIVEN SECOND READING, passed and approved on the 16th day of August, 2011, by a vote of 8 ayes and 0 nays at a regular meeting of the City Council of the City of Arlington, Texas.

ROBERT N. CLUCK, Mayor

ATTEST:

MARY W. SUPINO, City Secretary

APPROVED AS TO FORM:
JAY DOEGEY, City Attorney

BY

Ordinance No. 12-011

An ordinance amending the "Construction" Chapter of the Code of the City of Arlington, Texas, 1987, through the amendment of Article XIX, Construction on Lake Arlington, by the addition of Section 19.02.01, Work Within Lake Arlington or the Flowage Easement, and Section 19.02.02, Appeals to Requirements of Section 19.02.01, relative to conforming to the Lake Arlington Master Plan; and by the amendment of Section 19.05, Design and Construction Requirements for Piers and Boathouses, Subsections (B)(4) and (L)(4), relative to the 100 year flood elevation; providing for a fine of up to $2,000 for each offense in violation of the ordinance; providing this ordinance be cumulative; providing for severability, governmental immunity, injunctions, and publication; and becoming effective ten days after first publication

BE IT ORDAINED BY THE CITY COUNCIL OF THE CITY OF ARLINGTON, TEXAS:

1.

That the "**Construction**" Chapter of the Code of the City of Arlington, Texas, 1987, is hereby amended through the amendment of Article XIX, Construction on Lake Arlington, by the **addition** of **Section 19.02.01**, Work Within Lake Arlington or the Flowage Easement, and **Section 19.02.02**, Appeals to Requirements of Section 19.02.01, so that hereafter said sections shall read as follows:

Section 19.02.01 Work Within Lake Arlington or the Flowage Easement

When an existing structure within Lake Arlington or the Flowage Easement is to be replaced, repaired, or extended, the existing structure must comply or be brought into compliance with this Article when any of the following apply:

A. The work affects more than fifty percent (50%) of the length of a retaining wall, or

B. The work affects more than fifty percent (50%) of the floor area of the dock/pier, or

C. The work affects more than fifty percent (50%) of the area of a sundeck, or

D. The work affects more than fifty percent (50%) of the area of the roof structure.

EXCEPTION. If the cost of such replacement, repair, or extension does not exceed 50% of the reasonable value of the existing structure, only the portion of the structure replaced, repaired, or extended must conform to the provisions of the ordinance. The applicant has the burden of proof to establish the reasonable value of the existing structure and the cost of the requested replacement, repair, or extension.

Section 19.02.02 **Appeals to Requirements of Section 19.02.01**

The owner of the premises, or an authorized agent, who seeks to erect or alter a building or structure within Lake Arlington or the Flowage Easement may appeal from a decision of the Building Official specifically regarding Section 19.02.01 to the Director of Water Utilities through the Building Official.

A. The notice of appeal shall be filed within thirty (30) days after the Building Official renders a decision: provided, however, that said Building Official may limit the time for appeal to a shorter period in cases involving buildings or structures that are, in the Building Official's opinion, unsafe or dangerous.

B. Initiating work, progressing with that portion of work which is the particular issue on appeal, or progressing with work which would cover the matter on appeal, shall void such appeal.

C. The Director of Water Utilities, when appealed to, shall conduct a hearing within a reasonable time and no earlier than ten (10) days after sending written notice of the time, location, and purpose of such hearing to the applicant. After such hearing, the Director of Water Utilities may vary the application of any provision of Section 19.02.01 to any particular case when, in its opinion, the enforcement thereof would do manifest injustice and would be contrary to the spirit and purpose of Section 19.02.01 or the public interest, or when, in its opinion, the interpretation of the Building Official should be modified or reversed for any other reason. A decision of the Director of Water Utilities to vary the application of any provision of Section 19.02.01 or to modify an order of the Building Official shall specify in what manner such variation or modification is made, the conditions upon which it is made and the reasons therefore. The decision shall be in writing. The decision shall be promptly filed in the office of the Building Official and shall be open to the public for inspection. A true and correct copy of the decision shall promptly be sent by mail or otherwise to the appellant and a copy shall be publicly posted in the office of the Building Official for two (2) weeks after the filing thereof.

D. The decision of the Director of Water Utilities shall be final, subject, however, to such remedy as any aggrieved party might have at law or in equity. Any person, firm or corporation aggrieved by any decision of the Director of Water Utilities may present to a court of record a petition, duly verified, setting forth that such

decision is illegal in whole or in part, and specifying the grounds of the illegality. Unless such petition (appeal) shall be presented to the court within ten (10) days of the decision of the Director of Water Utilities is mailed or otherwise provided to appellant, the decision of the Director of Water Utilities shall become final.

E. If a decision of the Director of Water Utilities reverses or modifies any decision of the Building Official or varies the application of any provision of Section 19.02.01, the Building Official shall immediately take action in accordance with such decision.

Further, **Article XIX, Section 19.05,** Design and Construction Requirements for Piers and Boathouses, **Subsection (B)(4),** is hereby amended so that said subsection shall be and read as follows:

4. Floating piers and boathouses shall be designed with anchorage footing and piers to remain in place to prevent the structure from floating or rising above the 100-year flood elevation;

Further, **Article XIX, Section 19.05, Subsection (L)(4),** is hereby amended so that said subsection shall be and read as follows:

4. Required Water Proofing: All wood below the 100-year flood elevation shall be approved pressure-preservative-treated wood as defined in the building code. All metal, including bolts, lag bolts, and fasteners, shall be galvanized or factory painted and listed for immersion in water. Creosote treated wood is prohibited.

2.

Any person, firm, corporation, agent or employee thereof who violates any of the provisions of this ordinance shall be guilty of a misdemeanor and upon conviction thereof shall be fined an amount not to exceed Two Thousand and No/100 Dollars ($2,000) for each offense. Each day that a violation is permitted to exist shall constitute a separate offense.

3.

This ordinance shall be and is hereby declared to be cumulative of all other ordinances of the City of Arlington; and this ordinance shall not operate to repeal or affect any of such other ordinances except insofar as the provisions thereof might be inconsistent or in conflict with the provisions of this ordinance, in which event such conflicting provisions, if any, in such other ordinance or ordinances are hereby repealed.

4.

If any section, subsection, sentence, clause or phrase of this ordinance is for any reason held to be unconstitutional, such holding shall not affect the validity of the remaining portions of this ordinance.

5.

All of the regulations provided in this ordinance are hereby declared to be governmental and for the health, safety and welfare of the general public. Any member of the City Council or any City official or employee charged with the enforcement of this ordinance, acting for the City of Arlington in the discharge of his/her duties, shall not thereby render himself/herself personally liable; and he/she is hereby relieved from all personal liability for any damage that might accrue to persons or property as a result of any act required or permitted in the discharge of his/her said duties.

6.

Any violation of this ordinance can be enjoined by a suit filed in the name of the City of Arlington in a court of competent jurisdiction, and this remedy shall be in addition to any penal provision in this ordinance or in the Code of the City of Arlington.

7.

The caption and penalty clause of this ordinance shall be published in a newspaper of general circulation in the City of Arlington, Texas, in compliance with the provisions of Article VII, Section 15, of the City Charter. Further, this ordinance may be published in pamphlet form and shall be admissible in such form in any court, as provided by law.

8.

This ordinance shall become effective ten days after first publication.

PRESENTED AND GIVEN FIRST READING on the 20th day of March, 2012, at a regular meeting of the City Council of the City of Arlington, Texas; and GIVEN SECOND READING, passed and approved on the 3rd day of April, 2012, by a vote of 7 ayes and 0 nays at a regular meeting of the City Council of the City of Arlington, Texas.

ROBERT N. CLUCK, Mayor

ATTEST:

Mary W. Supino

MARY W. SUPINO, City Secretary

APPROVED AS TO FORM:
JAY DOEGEY, City Attorney

BY Mack Reinwand

Ordinance No. 12-020

An ordinance amending the "Construction" Chapter of the Code of the City of Arlington, Texas, 1987, through the amendment of Article I, Building Code, Section 1.02, Adoption of Code; Section 1.04, Amendments, Additions and Deletions, Subsections (B), (C), (D), and (E); and Section 1.05, Adoption of Appendices; through the amendment of Article IV, Registration, Permits and Inspections, Section 4.01, Registration, Subsection (F), by the addition of Subsections (5) – (7); Subsection 4.01(H); Section 4.02, Commercial Site Plan and Permits Required; Section 4.03, Application for Permit, Subsection (E); Section 4.04, Plans and Specifications, Subsection (B); Section 4.05, Building Permits Issued; Section 4.12, Refunds, by the amendment of the first paragraph and Subsection (D); Section 4.13, Inspections, Subsections (A), (C), and (D); Section 4.14, Certificate of Occupancy; Subsections (A), (B), (C), and (F); through the amendment of Article VI, Prefabricated or Modular Buildings; relative to adoption of the International Building Code, 2009 Edition; the International Residential Code, 2009 Edition; and the International Energy Conservation Code, 2009 Edition; through the amendment of Article XVI, Dangerous Buildings, Section 16.11, Other Enforcement, Subsection (A); the deletion of Section 16.11, Subsection (E); by the amendment of Section 16.13, Requiring Repair, Removal, or Demolition of Structure, Subsections (B)(7)(f) and (C); relative to dangerous building violations and procedures; providing for a fine of up to $2,000 for each offense in violation of the ordinance; providing this ordinance be cumulative; providing for severability, governmental immunity, injunctions, and publication; and becoming effective on May 24, 2012

BE IT ORDAINED BY THE CITY COUNCIL OF THE CITY OF ARLINGTON, TEXAS:

1.

That the "**Construction**" Chapter of the Code of the City of Arlington, Texas, 1987, is hereby amended through the amendment of Article I, Building Code, **Section 1.02**, Adoption of Code, so that hereafter said section shall read as follows:

Section 1.02 **Adoption of Code**

The International Building Code, 2009 Edition (hereinafter called "I.B.C."); the International Residential Code, 2009 Edition (hereinafter called "I.R.C."); and the International Energy Conservation Code, 2009 Edition (hereinafter called "I.E.C.C."); as published by the International Code Council, Inc. are hereby adopted and designated, together with the deletions, amendments and addenda hereinafter contained, as the Building Code of the City of Arlington, the same as though said I.B.C., I.R.C. and I.E.C.C. were copied at length herein. Copies of the I.B.C., I.R.C. and I.E.C.C. and its Appendices shall be kept on file in the Office of the City Secretary.

The adoption of the 2009 I.R.C. as stated herein except that Section R313 of the 2003 I.R.C., as amended and originally adopted on August 23, 2005 by Ordinance No. 05-068, to read as follows is maintained:

R313.1 Fire sprinkler system. All R3 and U occupancies are required to have an approved fire sprinkler system.

EXCEPTION: Buildings with an approved fire department access.

Further, Article I, **Section 1.04**, Amendments, Additions and Deletions, **Subsection (B)**, is hereby amended so that hereafter said subsection shall read as follows:

B. The deletion in the entirety of the following provisions of the I.B.C., I.E.C.C., and I.R.C.:

1. Section 105 I.B.C. and R105 I.R.C., entitled Permits;
2. Delete Section 107 I.B.C. entitled Submittal Documents and 106 I.R.C. entitled Construction Documents.
3. Section 109 I.B.C. and R108 I.R.C. and 107 I.E.C.C, entitled Fees;
4. Section 110 I.B.C. and R109 I.R.C., entitled Inspections; and
5. Section 111 I.B.C. and R110 I.R.C., entitled Certificate of Occupancy.
6. Section 113 I.B.C. and R112 I.R.C. and 109 I.E.C.C, entitled Board of Appeals;
7. Section 114 I.B.C. and R113 I.R.C., entitled Violations;
8. Section 116 I.B.C., entitled Unsafe Structures and Equipment;
9. Section 2503 I.B.C., entitled Inspection;
10. Chapters 34 through 43 I.R.C.

Further, Article I, **Section 1.04**, Subsection (C), is hereby amended so that hereafter said subsection shall read as follows:

C. The amendment of the following I.B.C. provisions:

1. The amendment of Section 101, entitled Title., to read as follows:

   These regulations shall be known as the Building Code of the City of Arlington, Texas, hereinafter referred to as "this code."

2. The amendment of the exceptions to Section 101.2, entitled Scope., to read as follows:

   EXCEPTIONS:

   1. Detached one- and two-family dwellings and multiple single-family dwellings (townhouses) not more than three stories above grade plane in height with a separate means of egress and their accessory structures shall comply with the International Residential Code.

   2. Portable and/or temporary storage buildings not exceeding three hundred twenty (320) square feet in area shall not be subject to the provisions of this Building Code for foundations and framing provided:

   (a) The building shall not be intended or used for human occupancy;

   (b) No plumbing and/or mechanical improvements shall be permitted and any electrical improvements are supervised by permits and work shall be installed in full compliance with the appropriate Chapter of the Code of the City of Arlington for such work; and

   (c) A permit for such building shall have been obtained from the Building Official.

3. The amendment of Section 101.4, entitled Referenced Codes., to read as follows:

   101.4 Referenced Codes. The other codes listed in Sections 101.4.1 through 101.4.7 and referenced elsewhere in this code, when specifically adopted, shall be considered part of the requirements of this code to the prescribed extent of each such reference. Whenever amendments have been adopted to the referenced codes and standards, each reference to said code and standard shall be considered to reference the amendments as well. Any reference to NFPA 70 or the ICC Electrical Code shall mean the Electrical Code as adopted.

4. The addition of Section 101.4.7, entitled Electrical., to read as follows:

101.4.7 Electrical. The provisions of the Electrical Code shall apply to the installation of electrical systems, including alterations, repairs, replacement, equipment, appliances, fixtures, fittings and appurtenances thereto.

5. The amendment of Section 103.1, entitled Creation of Enforcement Agency., to read as follows:

103.1 Creation of enforcement agency. The Building Inspections Division is hereby created and the official in charge thereof shall be known as the Building Official.

6. The amendment of Section 104.6, entitled Right of Entry., to read as follows:

Where it is necessary to make an inspection to enforce any of the provisions of this Building Code, or whenever the Building Official or an authorized representative has reasonable cause to believe that there exists in any building or upon any premises any condition or violation which makes such building or premises unsafe, dangerous or hazardous, the Building Official or an authorized representative may enter such building or premises at all reasonable times to inspect the same or to perform any duty imposed upon said Building Official by this Building Code. If such building or premises be occupied, the Building Official shall first present proper credentials and request entry. If such building or premises be unoccupied, the Building Official shall first make a reasonable effort to locate the owner or other person having charge or control of the building or premises and request entry. If such entry is refused, or, if no owner or other person having charge or control of the building or premises can be located, the Building Official or an authorized representative shall have recourse to every remedy provided by law to secure entry.

7. The addition of Section 104.12, entitled Occupancy Violations., to read as follows:

104.12 Occupancy Violations. Whenever any building, structure, or equipment therein which is regulated by this Building Code is being used contrary to the provisions of said Code, the Building Official or an authorized representative may order that such use be discontinued and/or that the building or structure, or a portion thereof, be vacated by written notice served on any person who is causing such use to be continued. Further, the Building Official or an authorized representative may order the evacuation of any building or premises, or a portion thereof, which constitutes a dangerous building as defined in Article XVI of this Chapter.

Notice to stop use shall be given by personal delivery or by certified mail, return receipt requested, to the person responsible for the continued use. Such person shall discontinue the use within the time prescribed by the Building Official after receipt of such notice and shall not resume the use of the building or premises until first rendering the same in compliance with this Building Code.

Notice to vacate a dangerous building or premises shall be posted at or upon each exit of the said structure affected thereby, and shall be in substantially the following form:

"DO NOT ENTER
UNSAFE TO OCCUPY

It is a misdemeanor to occupy this building,
or to remove or deface this notice.

Arlington Building Official
(by)_____
(date)_____
(compliance due date)_____"

No person shall remain in or enter any building or premises which has been so posted, except that entry may be made to repair, demolish or remove the unsafe condition. Such entry or the destruction, defacing or removal of said notice prior to approval by the Building Official or an authorized representative shall be a violation of this Building Code.

8. The amendment of Section 115, entitled STOP WORK ORDER, to read as follows:

115 STOP WORK ORDER

115.1 Stop Work Order. Whenever any work is being done contrary to the provisions of this Code, the Building Official may order the work stopped by notice in writing served on any persons engaged in the doing or causing such work to be done. Any such person shall forthwith stop such work until:

a. He or she is authorized by the Building Official to proceed with the work; or

b. An appeal perfected pursuant to Section 2.06 of Article II has resulted in a waiver of the condition causing the stop order, or a finding that there is no cause for a stop order.

Failure to stop such work, in addition to penalties and remedies elsewhere set forth, shall void any appeal.

9. The amendment of Section 202 by amending the definition of "AMBULATORY HEALTH CARE" to read as follows:

AMBULATORY HEALTH CARE FACILITY. Buildings or portions thereof used to provide medical, surgical, psychiatric, nursing or similar care on a less than 24-hour basis to individuals who are rendered incapable of self-preservation. This group may include but not necessarily be limited to the following:
- Dialysis centers
- Sedation dentistry
- Surgery centers
- Colonic centers
- Psychiatric centers

10. The amendment of Section 202 adding the definition of "SHALL" to read as follows:

SHALL, as it applies to an act or duty to be performed by the Building Official pursuant to any section of this Building Code, is discretionary. Its use in all other applications in this Code shall be mandatory.

11. The amendment of Section 304.1, entitled Business Group B., to read as follows:

304.1 Business Group B. Business Group B occupancy includes, among others, the use of a building or structure, or a portion thereof, for office, professional or service-type transactions, including storage of records and accounts. Business occupancies shall include, but not be limited to, the following:

Airport traffic control towers
Ambulatory health care facilities
Animal hospitals, kennels and pounds
Banks
Barber and beauty shops
Car wash
Civic administration
Clinic—outpatient
Dry cleaning and laundries; pick-up and delivery stations and self-service

Educational occupancies above the 12th grade
Electronic data processing
Fire Stations
Laboratories; testing and research
Motor vehicle showrooms
Police stations with detention facilities for 5 or less
Post offices
Print shops
Professional services (architects, attorneys, dentists, physicians, engineers, etc.)
Radio and television stations
Restaurants with no dine-in facilities (take-out or delivery only)
Telephone exchanges

12. Amend Exception number 4 to Section 307.1, entitled High-hazard Group H, to read as follows:

4. Cleaning establishments that utilize combustible liquid solvents having a flash point of 140°F (60°C) or higher in closed systems employing equipment listed by an approved testing agency, provided that this occupancy is separated from all other areas of the building by 1-hour fire barriers constructed in accordance with Section 707 or 1-hour horizontal assemblies constructed in accordance with Section 712, or both. See also Chapter 12. Dry Cleaning Plant provision of the Fire Code.

13. Amend Section 310.1, Residential Group R., more specifically the paragraphs entitled **R-3** to read as follows:

R-3 Residential occupancies where the occupants are primarily permanent in nature and not classified as R-1, R-2, R-4 or I, including:

Buildings that do not contain more than two *dwelling units.*
Adult care facilities that provide accommodations for five or fewer persons of any age for less than 24 hours.
Child care facilities that provide accommodations for five or fewer persons of any age for less than 24 hours.
Congregate living facilities with 16 or fewer persons.
Adult care and child care facilities with five or fewer unrelated persons that are within a single-family home are permitted to comply with the International Residential Code.

14. Amend 311.2 to add the use classification "Self Service Storage Facility."

15. The amendment of Section 403.1, Exception #3, to read as follows:

3. Buildings with an occupancy in Group A-5 in accordance with Section 303.1, when used for open air seating; however, this exception does not apply to accessory uses including but not limited to sky boxes, restaurants and similarly enclosed areas.

16. The amendment of Section 403.3, entitled Automatic sprinkler system., by the deletion of Exception #2.

17. The amendment of Section 404.1.1, entitled Definition., to read as follows:

404.1.1 Definition.

ATRIUM. An opening connecting three or more stories other than enclosed stairways, elevators, hoistways, escalators, plumbing, electrical, air-conditioning or other equipment, which is closed at the top and not defined as a mall. Stories, as used in this definition, do not include balconies within assembly groups or mezzanines that comply with Section 505.

18. The amendment of Section 404.5, entitled Smoke control, by the deletion of the Exception.

19. The amendment of Section 406.1.4, entitled Separation., by the addition of paragraph 4 to read as follows:

4. A separation is not required between a Group R-2 and U carport provided that the carport is entirely open on all sides and that the distance between the two is at least 10 feet (3048 mm).

20. The amendment of Section 406.6.1, entitled General., by the addition of a second paragraph to read as follows:

This occupancy shall include garages involved in servicing of motor vehicles for items such as lube changes, inspections, windshield repair or replacement, shocks, minor part replacement and other such non-major repair. When the repair garage is only involved in such minor repair, it need not comply with Section 406.6.2.

21. The amendment of the exception to Section [F]411.4, entitled Automatic sprinkler system., to read as follows:

EXCEPTION: An automatic sprinkler system need not be provided for amusement buildings actually operating not more than thirty (30) consecutive days.

22. The amendment of Section 411.7.1, entitled Photo luminescent exit signs., to read as follows:

411.7.1 Photo luminescent exit signs. Photo luminescent exit signs are prohibited.

23. The amendment of Section [F]416.5 entitled Fire protection., to read as follows:

[F]416.5 Fire protection. An automatic fire-extinguishing system shall be provided in all spray, dip and immersing spaces and storage rooms and shall be installed in accordance with Chapter 9 for both existing and new spray, dip and immersing spaces and storage rooms.

24. The amendment of Section 506.2.2, entitled Open space limits., to read as follows:

506.2.2 Open space limits. Such open space shall be either on the same lot or dedicated for public use and shall be accessed from a street or *approved fire lane.* In order to be considered as accessible, if not in direct contact with a street or an *approved fire lane*, a minimum ten (10) foot wide pathway adjoining fire department access from the street or *approved fire lane* shall be provided.

25. The amendment of Section 508.2.5, entitled Separation of incidental accessory occupancies., to read as follows:

508.2.5 Separation of incidental accessory occupancies. The incidental accessory occupancies listed in Table 508.2.5 shall be separated from the remainder of the building or equipped with an automatic fire extinguishing system, or both, in accordance with Table 508.2.5. An incidental accessory occupancy shall be classified in accordance with the occupancy classification of that portion of the building in which it is located.

> **Exception:** Incidental accessory occupancies within and serving a *dwelling unit* are not required to comply with this section.

26. The amendment of Table 602, entitled FIRE-RESISTANCE RATING REQUIREMENTS FOR EXTERIOR WALLS BASED ON FIRE SEPARATION DISTANCE[ae]., to insert footnote h. to the heading "OCCUPANCY GROUP A, B, E, F-2, I, R[h], S-2[g], U[bh]" to read as follows:

h. For one- and two-family dwellings and apartment buildings, open metal carport structures may be constructed within zero (0) feet of the property line without fire-resistive or opening protection when the location of such is approved as required by other City ordinances.

27. The amendment of Exception 7 to Section 708.2, entitled Shaft enclosure required., to read as follows .

7. In other than Groups I-2 and I-3, a shaft enclosure is not required for a floor opening or an air transfer opening that complies with the following:

7.1. Does not connect more than two stories.

7.2. Is not part of the required means of egress system except as permitted in Section 1022.1.

7.3. Is not concealed within the building construction of a wall or a floor/ceiling assembly.

7.4. Is separated from floor openings serving other floors by construction conforming to required shaft enclosures.

7.5 Is limited to the same smoke compartment.

28. The amendment of Section 902.1, entitled Definitions., by the amendment of the definition of "[F]STANDPIPE, TYPES OF," under "Manual dry" to read as follows:

Manual dry. A dry standpipe system that does not have a permanent water supply attached to the system. Manual dry standpipe systems require water from a fire department pumper to be pumped into the system through the fire department connection in order to supply the system demand. The system must be supervised as specified in Section 905.9.

29. The addition of Section 903.2.1.6, entitled Special amusement building, to read as follows:

[F]903.2.1.6 Special amusement building. Special amusement buildings shall be equipped throughout with an automatic sprinkler system.

EXCEPTION: An automatic sprinkler system need not be provided when an amusement building shall be in existence less than 30 days and when the construction and use is approved by the Fire Code Official or authorized representative.

30. The amendment of item #2 under Section [F]903.2.4, entitled Group F-1., to read as follows:

2. A Group F-1 *fire area* is located more than two stories above grade plane.

31. The amendment of Section [F]903.2.7, entitled Group M., to read as follows:

[F]903.2.7 Group M. An automatic sprinkler system shall be provided throughout buildings containing a Group M occupancy where one of the following conditions exists:

1. A Group M fire area exceeds 12,000 square feet (1115 m2).

2. A Group M fire area is located more than three stories above grade plane .

3. The combined area of all Group M fire areas on all floors, including any mezzanines, exceeds 24,000 square feet (2230 m2).

32. The addition of Section [F]903.2.9.3, entitled Self-service storage facility., to read as follows:

[F]**903.2.9.3 Self service storage facility**. An automatic sprinkler system shall be installed throughout all self-service storage facilities.

EXCEPTION: One story self-service storage facilities, that have no interior corridors, with a one-hour fire barrier wall installed between every storage compartment.

33. The amendment of Section [F]903.2.11.3, entitled Buildings 55 feet or more in height., to read as follows:

[F]**903.2.11.3 Buildings over two stories in height**. An automatic sprinkler system shall be installed throughout buildings, other than penthouses in compliance with Section 1509 of the International Building Code, that is located 55 feet or more above the lowest level of fire department vehicle access..

EXCEPTION: Open parking structures in compliance with Section 406.3.

34. The addition of Section [F]903.2.11.7, entitled High-Piled Combustible Storage., to read as follows:

[F]903.2.11.7 High-Piled Combustible Storage. For any building with a clear height exceeding 12 feet (4572 mm), see Chapter 23 of the Fire Code to determine if those provisions apply.

35. The addition of Section [F]903.2.11.8, entitled Spray Booths and Rooms., to read as follows:

[F]903.2.11.8 Spray Booths and Rooms. New and existing spray booths and spraying rooms shall be protected by an approved automatic fire-extinguishing system.

36. The amendment of Section [F]903.3.1.1.1, entitled Exempt locations., to read as follows:

[F]903.3.1.1.1 Exempt locations. When approved by the fire code official, automatic sprinklers shall not be required in the following rooms or areas where such rooms or areas are protected with an approved automatic fire detection system in accordance with Section 907.2 that will respond to visible or invisible particles of combustion. Sprinklers shall not be omitted from any room merely because it is damp, of fire-resistance-rated construction or contains electrical equipment.

1. Any room where the application of water, or flame and water, constitutes a serious life or fire hazard.

2. Any room or space where sprinklers are considered undesirable because of the nature of the contents, when approved by the code official.

3. Generator and transformer rooms, under the direct control of a public utility, separated from the remainder of the building by walls and floor/ceiling or roof/ceiling assemblies having a fire-resistance rating of not less than two hours.

37. The amendment of Section [F]903.3.1.2, entitled NFPA 13R sprinkler systems., to read as follows:

[F]903.3.1.2 NFPA 13R sprinkler system. Required automatic sprinkler systems in Group R occupancies of four stories or less may be hydraulically calculated within the dwelling units in accordance with NFPA 13R and as amended by this code. Sprinkler protection shall be provided throughout, including the means of egress, patios, bathrooms, closets, balconies and attics.

38. The amendment of Section [F]903.3.1.3, entitled NFPA 13D sprinkler systems., to read as follows:

[F]903.3.1.3 NFPA 13D sprinkler systems. Non-required automatic sprinkler systems in one and two-family dwellings and manufactured homes may be installed in accordance with NFPA 13D or in accordance with state law.

39. The amendment of Section [F]903.3.5, entitled Water supplies., to add a second paragraph to read as follows:

Water supply as required for such systems shall be provided in conformance with the supply requirements of the respective standards; however, every fire protection system shall be designed with a 10 psi safety factor.

40. The addition of Section [F]903.3.7, entitled Fire department connections., to read as follows:

[F]903.3.7 Fire department connections. The location of fire department connections shall be approved by the Fire Code Official. All fire department connections in the City of Arlington shall be 4" Storz connections. The permanent Storz adapter shall be constructed of high strength, light weight, corrosion resistant aluminum alloy capable of being securely attached to standpipe/sprinkler outlets designed for fire department Storz connections. The Storz lug connection shall conform to industry standards. The hose sealing surface shall consist of a machined metal seat to eliminate rubber gaskets, coated to protect against long term exposure to the environment. The Storz connection shall connect to the pipe outlet using National Standard Thread. The connection shall be angled downward at a 30° angle. A semi-permanent ¼" mesh screen shall be provided inside the Storz adapter, constructed of corrosion resistant metal. A 4" Storz aluminum cap with chain or cable shall be provided for the fire department connection. For each additional 1500 G.P.M. required or fraction thereof an additional 4" Storz connection is required.

41. The amendment of Section [F]903.4, entitled Sprinkler system supervision and alarms., to read as follows:

[F]903.4 Sprinkler system supervision and alarms. All valves controlling the water supply for automatic sprinkler systems and water-flow switches on all sprinkler systems shall be electrically supervised and monitored by a UL listed Central Station. The fire-pump system shall also be supervised and monitored for "power available," "phase reversal" and "pump running" conditions on distinct circuits.

EXCEPTIONS:

1. Automatic sprinkler systems protecting one-and two-family dwellings.

2. Limited area systems serving fewer than 20 sprinklers.

3. Jockey pump control valves that are sealed or locked in the open position.

Sprinkler and standpipe system water-flow detectors shall be provided for each floor tap to the sprinkler system and shall cause an alarm upon detection of water flow for more than 45 seconds. All control valves in the sprinkler and standpipe systems except for fire department hose connection valves shall be electrically supervised to initiate a supervisory signal at the central station upon tempering.

42. The amendment of Section [F]903.4.2, entitled Alarms., to read as follows:

[F]903.4.2 Alarms. Approved audible devices shall be connected to every automatic sprinkler system. Such sprinkler water-flow devices shall be activated by water flow equivalent to the flow of a single sprinkler of the smallest orifice size installed in the system. Alarm devices shall be provided on the exterior of the building in an approved location. An approved audible/visible sprinkler flow alarm to alert the occupants shall be provided in the interior of the building in a normally occupied location. Where a fire alarm system is installed, actuation of the automatic sprinkler system shall actuate the building fire alarm system.

43. The amendment of Section [F]903.4.3, entitled Floor control valves., to read as follows:

[F]903.4.3 Floor control valves. Sprinkler and standpipe system water-flow detectors shall be provided for each floor tap to the sprinkler system and shall cause an alarm upon detection of water flow.

44. The addition of Section [F]903.6., entitled Spray booths and rooms., to read as follows:

[F]903.6. Spray booths and rooms. New and existing spray booths and spray rooms shall be protected by an approved automatic fire extinguishing system in accordance with Section 1504.4 of the International Fire Code.

45. The addition of Section [F]905.2, entitled Installation standards., to read as follows:

[F]905.2 Installation standards. Standpipe systems shall be installed in accordance with this section and NFPA 14. Manual dry standpipe systems shall be supervised with a minimum of 10 psig and a maximum of 40 psig air pressure with a high/low alarm.

46. The amendment of Section [F]905.3.2, entitled Group A, to delete Exceptions #1 and #2.

47. The amendment of Section 905.4, entitled Location of Class I standpipe hose connections.. by revising item #5 to read as follows:

    5. Where the roof has a slope less than four units vertical in 12 units horizontal (33.3-percent slope), each standpipe shall be provided with a two-way hose connection located either on the roof or at the highest landing of stairways with stair access to the roof. An additional hose connection shall be provided at the top of the most hydraulically remote standpipe for testing purposes.

48. The amendment of Section [F]905.9, entitled Valve supervision., to add a second paragraph after the exceptions to read as follows:

    Sprinkler and standpipe system water-flow detectors shall be provided for each floor tap to the sprinkler system and shall cause an alarm upon detection of water flow for more than 45 seconds. All control valves in the sprinkler and standpipe systems except for fire department hose connection valves shall be electrically supervised to initiate a supervisory signal at the central station upon tampering.

49. The amendment of Section [F]906.1, entitled Where Required, by the deletion of the Exception to paragraph #1.

50. The addition of Sections [F]907.1.2.1, [F]907.1.2.2 and [F]907.1.2.3 to read as follows:

    [F]907.1.2.1 Fire alarm control panel. The fire alarm control panel shall be installed in an approved location adjacent to the main entrance to the building unless otherwise approved by the Fire Code Official.

    [F]907.1.2.2 Key/Codes. Fire alarm control panel functions such as silence and reset shall be operable without the use of a key or code. The panel cover may be locked, but the function keys cannot require a key or code.

[F]907.1.2.3 Alarm verification. Alarm verification shall be provided for smoke detectors. Alarm verification shall be provided at the fire alarm control panel when more than thirty (30) detectors are installed.

EXCEPTION: Alarm verification is not required for single station type smoke detectors.

51. The addition of Section [F]907.1.4, entitled Design Standards., to read as follows:

[F]907.1.4 Design Standards. Fire alarm systems, automatic fire detectors, emergency voice alarm communication systems and notification devices shall be designed, installed and maintained in accordance with NFPA 72 and local amendments. All alarm systems new or replacement serving 50 or more alarm actuating devices shall be addressable fire detection systems. Alarm systems serving more than 75 smoke detectors or more than 200 total alarm activating devices shall be analog intelligent addressable fire detection systems.

EXCEPTION: Existing systems need not comply unless the total building remodel or expansion initiated after January 1, 1998 exceeds 30% of the building. When cumulative building remodel or expansion exceeds 50% of the building must comply within 18 months of permit application.

52. The amendment of Section [F]907.2.3, entitled Group E., to read as follows:

[F]907.2.3 Group E. A manual fire alarm system shall be installed in Group E educational occupancies. When automatic sprinkler systems or smoke detectors are installed, such systems or detectors shall be connected to the building fire alarm system.

An approved smoke detection system shall be installed in Group E day care occupancies.

Unless separated by a minimum of 100' open space, all buildings, whether portable buildings or the main building, will be considered one building for alarm occupant load consideration and interconnection of alarm systems.

EXCEPTIONS:

1. Group E educational and day care occupancies with an occupant load of less than 50 when provided with an approved automatic sprinkler system.

1.1. Portable/Temporary buildings in Group E Educational occupancies with manual fire alarm systems are not required to be connected to the alarm system in the main building.

1.2. Residential in-home day care with not more than 12 children may use interconnected single station detectors in all habitable rooms. (For care of more than five children 2½ or less years of age, see Section 907.2.6.)

2. Manual fire alarm boxes are not required in Group E occupancies where all of the following apply:

2.1. Interior corridors are protected by smoke detectors.

2.2. Auditoriums, cafeterias, gymnasiums and similar areas are protected by heat detectors or other approved detection devices.

2.3. Shops and laboratories involving dusts or vapors are protected by heat detectors or other approved detection devices.

2.4. The capability to activate the evacuation signal from a central point is provided.

2.5. In buildings where normally occupied spaces are provided with a two-way communication system between such spaces and a constantly attended receiving station from where a general evacuation alarm can be sounded, except in locations specifically designated by the fire code official.

3. Manual fire alarm boxes shall not be required in Group E occupancies where the building is equipped throughout with an approved automatic sprinkler system installed in accordance with Section 903.3.1.1, the notification appliances will activate on sprinkler waterflow and manual activation is provided from a normally occupied location.

53. The amendment of Section [F]907.2.7, entitled Group M, by the deletion of Section 907.2.7.1, entitled Occupant Notification.

54. The addition of Section [F]907.2.8.4, entitled Carbon Monoxide Detectors., to read as follows:

[F]907.2.8.4 Carbon Monoxide Detectors. In new and existing hotels and motels, carbon monoxide detectors shall be provided in all locations where there is gas-fired equipment, such as, but not limited to, dryers, HVAC, or hot water heaters. When the building is equipped with a fire

alarm system, the carbon monoxide detectors shall be connected in such a manner as to cause the Fire Alarm system to sound an alarm when the carbon monoxide goes into alarm.

55. The amendment of Section [F]907.2.9.1, entitled Manual fire alarm systems., to read as follows:

[F]**907.2.9.1 Manual Fire Alarm Systems**. Manual fire alarm boxes are prohibited in Group R-2 apartment houses less than four (4) stories in height.

56. The amendment of Section [F]907.2.13, entitled High- rise buildings., Exception #3, to read as follows:

3. Buildings with an occupancy in Group A-5 in accordance with Section 303.1 of the International Building Code, when used for open air seating; however, this exception does not apply to accessory uses, including but not limited to sky boxes, restaurants and similarly enclosed areas.

57. The amendment of Section [F]907.4.2, entitled Manual fire alarm boxes., to add a second paragraph to read as follows:

Manual alarm actuating devices shall be an approved double action type.

58. The addition of Section [F]907.6.1.1 entitled Installation., to read as follows:

[F]907.6.1.1 Installation. All fire alarm systems shall be installed in such a manner that the failure of any single alarm-actuating or alarm-indicating device will not interfere with the normal operation of any other such devices. All systems shall be Class "A" wired with a minimum of six feet separation between supply and return loops. IDC – Class "A" style – D – SLC Class "A" Style 6 – notification Class "B" Style Y.

59. The amendment of [F]907.6.3, entitled Zones., to read as follows:

[F]907.6.3 Zones. Each floor shall be zoned separately and a zone shall not exceed 22,500 square feet (1860 m^2). The length of any zone shall not exceed 300 feet (91 440 mm) in any direction. A maximum of one (1) water flow switch or three (3) tamper switches, five (5) pull stations or ten (10) smoke or heat detectors may be interconnected to be upon a single zone of a fire alarm control panel.

Exceptions:

1. Automatic sprinkler system zones shall not exceed the area permitted by NFPA 13.

2. Addressable systems.

60. The amendment of [F]907.6.3.2, entitled High-rise buildings., to read as follows:

[F]907.6.3.2 High-rise buildings. In buildings that have floors located more than 75 feet (16 764 mm) above the lowest level of fire department vehicle access, a separate zone by floor shall be provided for all of the following types of alarm-initiating devices where provided:

1. Smoke detectors.

2. Sprinkler water-flow.

3. Manual fire alarm boxes.

4. Other approved types of automatic fire detection devices or suppression systems.

Exception:

Addressable systems

61. The amendment of Section [F]907.6.5, entitled Monitoring., to read as follows:

[F]907.6.5 Monitoring. Where required by this chapter, an approved UL listed central station in accordance with NFPA 72 shall monitor fire alarm systems.

Exception: Supervisory service is not required for automatic sprinkler systems in one- and two-family dwellings.

62. The addition of Section [F]907.6.5.2, entitled Local alarm system., to read as follows:

[F]907.6.5.2 Local alarm system. When an automatic fire alarm system is not monitored by an approved central station alarm company, an external weatherproof, audible/visual alarm sounding device shall be provided in an approved location with an approved sign, with a minimum

of four-inch (4") letters, reading "WHEN ALARM SOUNDS, CALL FIRE DEPARTMENT" adjacent to the alarm-sounding device.

An approved permanent sign reading "LOCAL ALARM ONLY – CALL FIRE DEPARTMENT" shall be provided on or adjacent to the fire alarm control panel and all manual fire alarm pull stations.

63. The amendment of Section 1007.1, entitled Accessible means of egress required., to add exception #4 to read as follows:

    4. Projects registered with the Architectural Barriers Division of the Texas Department of Licensing and Regulation shall be deemed to be in compliance with the requirements of Section 1007.

64. The amendment of Section 1008.1.4.4, entitled Access-controlled egress doors., to read as follows:

    1008.1.4.4 Access-controlled egress doors. The entrance doors in a means of egress in buildings with an occupancy in Group A, B, E,I-2, M, R-1 or R-2 and entrance doors to tenant spaces in occupancies in Groups A, B, E, I-2, M, R-1, and R-2 are permitted to be equipped with an approved entrance and egress access control system which shall be installed in accordance with all of the following criteria:

    1. Egress doors shall be readily openable from the egress side without the use of a key, card or special knowledge of effort.

    2. Push buttons are not allowed for egress purposes.

    3. All devices utilized for exiting shall be listed for the purpose.

    4. Activation of the building fire alarm system and/or sprinkler system, if provided, shall automatically unlock the doors, and the doors shall remain unlocked until the fire alarm system has been reset.

    5. A Knox box may be required by the Fire Code Official for Fire Department access.

       A permit from the FD is required prior to the installation of any access-control and/or magnetic locking systems.

65. The amendment of Section 1008.1.9.3., entitled Locks and latches, by the addition of item 3.1 to read as follows:

3.1 Where egress doors are used in pairs and positive latching is required, approved automatic flush bolts shall be permitted to be used, provided that both leaves achieve positive latching regardless of the closing sequence and the door leaf having the automatic flush bolts has no doorknobs or surface mounted hardware.

66. The amendment of Exceptions #3 and #4 to Section 1008.1.9.4, entitled Bolt locks., to read as follows:

3. Where a pair of doors serves an occupant load of less than 50 persons in a Group B, F, M or S occupancy, manually operated edge- or surface-mounted bolts are permitted on the inactive leaf. The inactive leaf shall contain no doorknobs, panic bars or similar operating hardware.

4. Where a pair of doors serves an occupant load of less than 50 persons in a Group B, F, M or S occupancy, manually operated edge- or surface-mounted bolts are permitted on the inactive leaf provided such inactive leaf is not needed to meet egress width requirements and the building is equipped throughout with an automatic sprinkler system in accordance with Section 903.3.1.1. The inactive leaf shall contain no doorknobs, panic bars or similar operating hardware.

67. The amendment of Section 1008.1.9.7, entitled Delayed egress locks., to read as follows:

1008.1.9.7 Delayed egress locks. A permit from the Fire Department is required prior to the installation of any delayed egress locks or other special locking systems. Approved, listed, delayed egress locks shall be permitted to be installed on doors serving any occupancy except Group A, E and H occupancies in buildings which are equipped throughout with an automatic sprinkler system in accordance with Section 903.3.1.1 and an approved automatic smoke or heat detection system installed in accordance with Section 907, provided that the doors unlock in accordance with Items 1 through 6 below. A building occupant shall not be required to pass through more than one door equipped with a delayed egress lock before entering an exit.

(Items 1-6 remain unchanged.)

68. The amendment of Section 1008.1.9.8., entitled Electromagnetically locked egress doors., to read as follows:

1008.1.9.8 Electromagnetically locked egress doors. Doors in the *means of egress* that are not otherwise required to have panic hardware in buildings with an occupancy in Group A, B, E, I-1, I-2, M, R-1 or R-2 and

doors to tenant spaces in Group A, B, E, I-1, I-2, M, R-1 or R-2 shall be permitted to be electromagnetically locked if equipped with *listed* hardware that incorporates a built-in switch and meet the requirements below:

1. The *listed* hardware that is affixed to the door leaf has an obvious method of operation that is readily operated under all lighting conditions.

2. The *listed* hardware is capable of being operated with one hand.

3. Operation of the *listed* hardware releases to the electromagnetic lock and unlocks the door immediately.

4. Loss of power to the *listed* hardware automatically unlocks the door.

69. The amendment of Section 1008.1.9.10, entitled Stairway Doors., by adding Exception #4, to read as follows:

    4. In stairways serving more than four stories, doors can be locked from stairway side, if lock is connected to fire alarm system and key to the door is provided in a Knox Box. Activation of fire alarm system must release locks on all stairway doors.

70. The amendment of Section 1011.4, entitled Internally illuminated exit signs., to read as follows:

    1011.4 Internally illuminated exit signs. Electrically powered and *self-luminous exit* signs shall be listed and labeled in accordance with UL 294 and shall be installed in accordance with the manufacturer's instructions and Chapter 27. *Exit* signs shall be illuminated at all times. *Photoluminescent exit* signs are prohibited.

71. The addition of Section 1015.7, entitled Electrical room means of egress., to read as follows:

    1015.7 Electrical room means of egress. For electrical rooms containing equipment over 600 volts, see electrical code, NFPA 70, Article 110, generally.

72. The amendment of Exceptions #3 and #4 to Section 1016.1, entitled Travel distance limitations., to read as follows:

    3. In other than occupancy Groups H and I, the *exit* access travel distance to a maximum of 50 percent of the exits is to be measured

from the most remote point within a building to an exit using unenclosed *exit access* stairways or *ramps* when connecting to a maximum of two stories. The two connected stories shall be provided with at least two *means of egress.* Such interconnected stories shall not be open to other stories.

4. In other than occupancy Groups H and I, the *exit* access travel distance to a maximum of 50 percent of the exits is to be measured from the most remote point within a building to an exit using unenclosed *exit access* stairways or *ramps* in the first and second stories above *grade plane* in buildings equipped throughout with an *automatic sprinkler system* in accordance with Section 903.3.1.1. The first and second stories above *grade plane* shall be provided with at least two *means of egress*. Such interconnected stories shall not be open to other stories.

73. The amendment of Section 1016, entitled EXIT ACCESS TRAVEL DISTANCE, to add a new section to read as follows:

1016.3. Roof vent increase. In buildings that are one story in height, equipped with automatic heat and smoke roof vents complying with Section 910 and equipped throughout with an automatic sprinkler system in accordance with Section 903.3.1.1, the maximum exit access travel distance shall be 400 feet for occupancies in Group F-1 or S-1.

74. The amendment of Section 1018.1, entitled Construction., to add Exception #5 to read as follows:

5. In Group B office buildings, corridor walls and ceilings need not be of fire-resistive construction within office spaces of a single tenant when the space is equipped with an approved automatic smoke-detection system within the corridor. The actuation of any detector shall activate alarms audible in all areas served by the corridor. The smoke-detection system shall be connected to the building's fire alarm system where such a system is provided.

75. The amendment of Section 1022.1, entitled Enclosures required., by adding Exceptions # 8 and #9 to read as follows:

8. In other than occupancy Groups H and I, a maximum of 50 percent of egress stairways serving one adjacent floor are not required to be enclosed, provided at least two means of egress are provided from both floors served by the unenclosed stairways. Any two such interconnected floors shall not be open to other floors.

9. In other than occupancy Groups H and I, interior egress stairways serving only the first and second stories of a building equipped throughout with an automatic sprinkler system in accordance with Section 903.3.1.1 are not required to be enclosed, provided at least two means of egress are provided from both floors served by the unenclosed stairways. Such interconnected stories shall not be open to other stories.

76. The amendment of Section 1101.2, entitled Design., to add an Exception to read as follows:

EXCEPTION. Projects registered with the Architectural Barriers Division of the Texas Department of Licensing and Regulation shall be deemed to be in compliance with the requirements of this Chapter.

77. The amendment of Table 1505.1, entitled MINIMUM ROOF COVERING CLASSIFICATION FOR TYPES OF CONSTRUCTION., by **deleting** footnote b and **amending and renumbering** footnote c to read as follows:

b. Non-classified roof coverings shall be permitted on buildings of U occupancies having not more than 120 sq. ft. of projected roof area. When exceeding 120 sq. ft. of projected roof area, buildings of U occupancies may use non-rated non-combustible roof coverings.

78. The amendment of Section 1505.7, entitled Special purpose roofs., by deleting it in its entirety.

79. The amendment of Section 1510.1, entitled General., to read as follows:

1510.1 General. Materials and methods of applications used for recovering or replacing an existing roof covering shall comply with the requirements of Chapter 15. All individual replacement shingles or shakes shall be in compliance with the rating required by Table 1505.1.

Exception: Reroofing shall not be required to meet the minimum design slope requirement of one-quarter unit vertical in 12 units horizontal (2-percent slope) in Section 1507 for roofs that provide positive roof drainage.

80. The amendment of Section 1612.2, entitled Definitions., to delete **FLOOD HAZARD AREA SUBJECT TO HIGH VELOCITY WAVE ACTION,** and to amend **BASE FLOOD ELEVATION, EXISTING CONSTRUCTION, LOWEST FLOOR, SUBSTANTIAL DAMAGE** and **SUBSTAINTIAL IMPROVEMENT** to read as follows:

BASE FLOOD ELEVATION. The elevation of the *base flood,* including wave height, relative to the National Geodetic Vertical Datum (NGVD), North American Vertical Datum (NAVD) or other datum specified on the Flood Insurance Rate Map (FIRM) and found in the accompanying Flood Insurance Study (FIS) for Zones A, AE, AH, A1-A30, or AR that indicates the water surface elevation resulting from the flood that has a 1% chance of equaling or exceeding that level in any given year.

EXISTING CONSTRUCTION. Any buildings and structures for which the "start of construction" commenced before the effective date of the initial FIRM (March 5, 1976). "Existing construction" may also be referred to as "existing structures."

LOWEST FLOOR. The floor of the lowest enclosed area, including basement and finished garage, but excluding any unfinished or flood-resistant enclosure, usable solely for vehicle parking, building access or limited storage provided that such enclosure is not built so as to render the structure in violation of this section.

SUBSTANTIAL DAMAGE. Damage of any origin sustained by a structure whereby the cost of restoring the structure to its before-damaged condition would equal or exceed 25 percent of the market value of the structure before the damage occurred.

SUBSTANTIAL IMPROVEMENT. Any repair, reconstruction, rehabilitation, addition or improvement of a building or structure, the cost of which equals or exceeds 25 percent of the market value of the structure before the improvement or repair is started. If the structure has sustained substantial damage, any repairs are considered substantial improvement regardless of the actual repair work performed. The term does not, however, include either:

1. Any project for improvement of a building required to correct existing health, sanitary or safety code violations identified by the building official and that are the minimum necessary to assure safe living conditions.

2. Any alteration of a historic structure provided that the alteration will not preclude the structure's continued designation as a historic structure.

81. The amendment of Section 1612.3, entitled Establishment of flood hazard areas., to read as follows:

1612.3 Establishment of flood hazard areas. To establish flood hazard areas, the applicable governing authority shall adopt a flood hazard map

and supporting data. The flood hazard map shall include, at a minimum, areas of special flood hazard as identified by the Federal Emergency Management Agency in an engineering report entitled "The Flood Insurance Study for Tarrant County, Texas, dated September 25, 2009, as amended or revised with the accompanying Flood Insurance Rate Map (FIRM) and Flood Boundary and Floodway Map (FBFM) and related supporting data along with any revisions thereto. The adopted flood hazard map and supporting data are hereby adopted by reference and declared to be part of this section.

82. The amendment of Section 1612.4, entitled Design and construction., to read as follows:

1612.4 Design and construction. The design and construction of buildings and structures located in *flood hazard areas* , including flood hazard areas subject to high-velocity wave action, shall be in accordance with Chapter 5 of ASCE 7 and with ASCE 24 and provisions of the City of Arlington's Flood Damage Ordinance.

83. The amendment of Section 1612.5, entitled Flood hazard documentation., to read as follows:

1612.5 Flood hazard documentation. The flood hazard documentation as identified in the City of Arlington's Flood Damage Ordinance shall be prepared and sealed by a *professional engineer* and submitted to the *building official.*

84. The amendment of Section 1807.2, entitled Retaining walls., to read as follows:

1807.2 Retaining walls. Retaining walls exceeding four feet (4') in developed height (the height from the base of the foundation to the top of the wall) at any point shall be designed by a professional engineer. A wall built in tiers shall be considered a single wall in developed height when the base of the upper tier is set back from the base of the lower tier less than one and one-half (1½) times the developed height of the wall section below. Walls supporting an imposed load such as a building, driveway or other permanent construction closer to the wall than one and one-half (1½) times the developed height of the wall shall be designed by a professional engineer.

When required to be designed by an engineer the design shall be in accordance with Sections 1807.2.1 through 1807.2.3.

85. The addition of Section 2308.4.3 entitled Application to engineered design., to read as follows:

2308.4.3 Application to engineered design. When accepted by the Building Official, any portion of this section is permitted to apply to buildings that are otherwise outside the limitations of this section provided that:

The resulting design will comply with the requirements specified in Chapter 16;

The load limitations of various elements of this section are not exceeded; and

The portions of this section which will apply are identified by an engineer in the construction documents.

86. The amendment of Section 2503.1 entitled Inspection., to read as follows:

2503.1 Inspection. Lath and gypsum in fire- resistive construction shall be inspected.

87. The amendment of Section [P]2902.1, entitled Minimum number of fixtures., to read as follows:

[P]2902.1 Minimum number of fixtures. Plumbing fixtures shall be provided for the type of occupancy and in the minimum number shown in Table 2902.1. Types of occupancies not shown in Table 2902.1 shall be considered individually by the *building official.* The number of occupants shall be determined by this code unless sufficient data is approved by the *building official* for a different number of occupants. Occupancy classification shall be determined in accordance with Chapter 3.

88. The addition of Section 2902.1.3, entitled Additional fixtures for food preparation facilities., to read as follows:

2902.1.3 Additional fixtures for food preparation facilities. In addition to the fixtures required in this Chapter, all food service facilities shall be provided with additional fixtures set out in this section.

2902.1.3.1 Hand washing lavatory. At least one hand washing lavatory shall be provided for use by employees that is accessible from food preparation, food dispensing and ware washing areas. Additional hand washing lavatories may be required based on convenience of use by employees.

2902.1.3.2 Service sink. In new or remodeled food service establishments, at least one service sink or one floor sink shall be provided

so that it is conveniently located for the cleaning of mops or similar wet floor cleaning tools and for the disposal of mop water and similar liquid waste. The location of the service sink(s) and/or mop sink(s) shall be approved by the City of Arlington health department.

89. The amendment of [P]Table 2902.1, entitled MINIMUM NUMBER OF REQUIRED PLUMBING FIXTURES, to amend footnote "e" and "f" and add footnote "g" to read as follows:

    e. The minimum number of drinking fountains shall comply with Table 2902.1 and Chapter 11. Drinking fountains shall not be installed in toilet rooms.

    f. Drinking fountains are not required for an occupant load 30 or less and for dining and/or drinking establishments.

    g. Where urinals are provided, urinals shall not be substituted for more that 67% of the required water closets in assembly and educational *occupancies*. Urinals shall not be substituted for more than 50% or the required water closets in all other *occupancies*.

90. The amendment of Exception #3 to Section 2902.2 to read as follows:

    3. Separate facilities shall not be required in mercantile occupancies in which the maximum *occupant load* is 100 or less.

91. The amendment of Section 3006, entitled <u>MACHINE ROOMS</u>, to read as follows:

    3006.1 General. Elevator machine rooms shall be provided.

    3006.2 Access. An approved means of access shall be provided to elevator machine rooms and overhead machinery spaces.

    3006.3 Venting. Elevator machine rooms that contain solid-state equipment for elevator operation shall be provided with an independent ventilation or air-conditioning system to protect against the overheating of the electrical equipment. The system shall be capable of maintaining temperatures within the range established for the elevator equipment.

    3006.4 Pressurization. The elevator machine room serving a pressurized elevator hoistway shall be pressurized upon activation of a heat or smoke detector located in the elevator machine room.

    3006.5 Machine rooms and machinery spaces. Elevator machine rooms and machinery spaces shall be enclosed with fire barriers

constructed in accordance with Section 707 or horizontal assemblies constructed in accordance with Section 712, or both. The fire-resistance rating shall not be less than the required rating of the hoistway enclosure served by the machinery. Openings in the fire barriers shall be protected with assemblies having a fire protection rating not less than that required for the hoistway enclosure doors. Storage shall not be permitted within the elevator machine room. The building owner shall provide permanent approved signage at each entry door to the elevator machine room stating "Elevator Machinery – No Storage Allowed."

Exceptions:

1. Where machine rooms and machinery spaces do not abut and have no openings to the hoistway enclosure they serve the fire barriers constructed in accordance with Section 707 or horizontal assemblies constructed in accordance with Section 712, or both, shall be permitted to be reduced to a 1-hour fire-resistance rating .

2. In buildings four stories or less above grade plane when machine room and machinery spaces do not abut and have no openings to the hoistway enclosure they serve, the machine room and machinery spaces are not required to be fire-resistance rated.

3006.6 Shunt trip. Where elevator hoistways or elevator machine rooms containing elevator control equipment are protected with automatic sprinklers, a means installed in accordance with NFPA 72, Section 6.16.4, Elevator Shutdown, shall be provided to disconnect automatically the main line power supply to the affected elevator prior to the application of water. This means shall not be self-resetting. The activation of sprinklers outside the hoistway or machine room shall not disconnect the main line power supply.

3006.7 Plumbing systems. Plumbing systems shall not be located in elevator equipment rooms.

92. The amendment of Section 3109.2, entitled Definition, to read as follows:

3109.2 Definition. The following words and terms shall, for the purposes of this section and as used elsewhere in this code, have the meaning shown herein.

MULTI-UNIT RENTAL COMPLEX is two or more dwelling units in one or more buildings that are under common ownership, managed by the same owner, managing agent, or management company, and located on the same lot or tract of land or adjacent lots or tracts of land. The term includes a condominium project. The term does not include:

(A) A facility primarily renting rooms to overnight guests; or

(B) A single-family home or adjacent single-family homes that are not part of a condominium project.

POOL DECK is a flat walking surface consisting of wood, stone, brick, concrete or other similar material located within five feet (5') of the water's edge of a swimming pool or spa.

PROPERTY OWNERS ASSOCIATION is an association of property owners for a residential subdivision, condominium, cooperative, townhouse project, or other project involving residential dwellings.

SELF-CLOSING GATE is a gate, which closes or shuts automatically, without the aid of human, electrical, solar or battery power after being opened.

SELF-CLOSING AND SELF-LATCHING DEVICE is a device that causes a gate to automatically close and latch without human, electrical, solar or battery power.

93. The amendment of Section 3109.3, entitled Public Swimming Pools, to read as follows:

3109.3 Public Swimming Pools. Public swimming pools (pools not accessory to a 1- or 2-family dwelling) shall be completely enclosed by a fence that complies with the Health and Sanitation Chapter, Article VII, Public Swimming Pool, Section 7.01.

94. The amendment of Section 3109.4.1.7, entitled Gates., by the addition of an Exception to read as follows:

EXCEPTION: Driveway access gates across a paved or improved surface intended for regular vehicle access shall not be located in a swimming pool barrier.

95. The amendment of Section 3401.4, entitled Alternative Compliance., is amended to read as follows:

3401.4 Alternative compliance. Work performed in accordance with the *International Existing Building Code* shall be deemed to comply with the provisions of this chapter only with the prior approval of the *building official.*

96. The addition of Section 3401.5, entitled Group R-2 Fire alarms., to read as follows:

3401.5 **Group R-2 Fire alarms.** A fire alarm system shall be installed to existing Group R-2 occupancies more than three stories in height or with more than 16 dwelling units or sleeping units, where the total building remodel or renovation initiated after November 2005 exceeds 30% of the building. When cumulative complex remodel or expansion exceeds 50%, the complex must comply within 18 months of permit application.

Exceptions:

1. Where each living unit is separated from other continuous living units by fire barriers having a fire-resistance rating or not less than 0.75 hour, and where each living unit has either its own independent exit or its own independent stairway or ramp discharging at grade.

2. A separate fire alarm system is not required in buildings that are equipped throughout with an approved supervised automatic sprinkler system installed in accordance with Section 903.3.1.1 or 903.3.1.2 and having a local alarm to notify all occupants.

3. A fire alarm system is not required in buildings that do not have interior corridors serving dwelling units and are protected by an approved automatic sprinkler system installed in accordance with Sections 903.3.1.1 or 903.3.1.2, provided that dwelling units either have a means of egress door opening directly to an exterior exit access that leads directly to the exits or are served by open-ended corridors designed in accordance with Section 1022.6, Exception 4.

97. The amendment of Section 3412.2 entitled Applicability., to read as follows:

3412.2 Applicability. Structures existing prior to June 6, 1961, in which there is work involving additions, alterations or changes of occupancy shall be made to comply with the requirements of this section or the provisions of Sections 3403 through 3409. The provisions in Sections 3412.2.1 through 3412.2.5 shall apply to existing occupancies that will continue to be, or are proposed to be, in Groups A, B, E, F, M, R, S and U. These provisions shall not apply to buildings with occupancies in Group H or I.

Further, Article I, **Section 1.04**, Subsection (D), is hereby amended so that hereafter said subsection shall read as follows:

D. The amendment of the following I.R.C. provisions:

1. The amendment of Section R101.1, entitled Title,. to read as follows:

   R101.1 Title. These provisions shall be known as the Residential Code for One- and Two-family Dwellings of the City of Arlington, Texas, and shall be cited as such and will be referred to herein as "this code."

2. The amendment of Section R102.4, entitled Referenced codes and standards., to read as follows:

   R102.4 Referenced codes and standards. The codes, when specifically adopted, and standards referenced in this code shall be considered part of the requirements of this code to the prescribed extent of each such reference. Whenever amendments have been adopted to the referenced codes and standards, each reference to said code and standards shall be considered to reference the amendments as well. Any reference made to NFPA 70, or ICC Electrical Code shall mean the Electrical Code as adopted.

   Where differences occur between provisions of this code and referenced codes and standards, the provisions of this code shall apply.

   EXCEPTION: Where enforcement of a code provision would violate the conditions of the listing of the equipment or appliance, the conditions of the listing and manufacturer's instructions shall apply.

3. The amendment of Section R114, entitled STOP WORK ORDER, to read as follows:

   R114 STOP WORK ORDER

   R114.1 Stop Work Order. Whenever any work is being done contrary to the provisions of this Code, the Building Official may order the work stopped by notice in writing served on any persons engaged in the doing or causing such work to be done. Any such person shall forthwith stop such work until:

   a. He or she is authorized by the Building Official to proceed with the work; or

b. An appeal perfected pursuant to Section 2.06 of Article II has resulted in a waiver of the condition causing the stop order, or a finding that there is no cause for a stop order.

Failure to stop such work, in addition to penalties and remedies elsewhere set forth, shall void any appeal.

4. The amendment of Section R202, entitled Definitions., to revise the definition of "Townhouse" and add the definitions of "Glazing Area", "Reclaimed Water", and "Shall" to read as follows:

GLAZING AREA. Total area of the glazed fenestration measured using the rough opening and including sash, curbing or other framing elements that enclose conditioned space. Glazing area includes the area of glazed fenestration assemblies in walls bounding conditioned basements. For doors where the daylight opening area is less that 50 percent of the door area, the glazing area is the daylight opening area. For all other doors, the glazing area is the rough opening area for the door including the door and the frame.

RECLAIMED WATER or "Recycled Water" means domestic or municipal wastewater which has been treated to a quality suitable for beneficial use. Reclaimed or recycled water is non-potable water.

SHALL, as it applies to an act or duty to be performed by the Building Official pursuant to any section of this Building Code, is discretionary. Its use in all other applications in this Code shall be mandatory.

TOWNHOUSE. A single-family dwelling unit constructed in a group of attached units separated by property lines in which each unit extends from foundation to roof and with yard or public way on at least two sides.

5. The amendment of table R301.2(1), entitled Climatic and Geographic Design Criteria, to fill in as follows:

GROUND SNOW LOAD	WIND DESIGN		SEISMIC DESIGN CATEGORY[f]
	SPEED[d] (mph)	Topographic Effects[k]	
5 lb/ft^2	90 (3-sec-gust)/76 fastest mile	No	A

SUBJECT TO DAMAGE FROM		
Weathering[a]	Frost line depth[b]	Termite[c]
moderate	6"	very heavy

WINTER DESIGN TEMP[e]	ICE SHIELD UNDER-LAYMENT REQUIRED[h]	FLOOD HAZARDS[g]	AIR FREEZING INDEX[i]	MEAN ANNUAL TEMP[j]
22°F	No	See IBC 1612	150	64.9°F

6. The amendment of Section R301.2.4, Floodplain construction., to read as follows:

R301.2.4 Construction in flood hazard areas. Permits for the construction, reconstruction, rehabilitation, addition or other improvements shall be performed in accordance with the provisions of SECTION 1612 FLOOD LOADS of the International Building Code, as amended.

7. The amendment of Section R302.1, entitled Exterior walls., by adding Exception #6, to read as follows:

   6. Open metal carport structures may be constructed within zero (0) feet of the property line without fire-resistive or opening projection when the location of such is approved as required by other City ordinances.

8. The amendment of Section R302.2, entitled Townhouses., to read as follows:

R302.2 Townhouses. Each *townhouse* shall be considered a separate building and shall be separated by fire-resistance-rated wall assemblies meeting the requirements of Section R302.1 for exterior walls.

Exceptions: A common 2-hour fire-resistance-rated wall, or one-hour fire resistance rated wall assembly when protected by an approved fire sprinkler system, tested in accordance with ASTME 119 or UL 263 is permitted for townhouses if such walls do not contain plumbing or mechanical equipment, ducts or vents in the cavity of the common wall. The wall shall be rated for fire exposure from both sides and shall extend

to and be tight against exterior walls and the underside of the roof sheathing. Electrical installations shall be installed in accordance with Chapters 34 through 43. Penetrations of electrical outlet boxes shall be in accordance with Section R302.4.

9. The amendment of Section R302.2.4, entitled Structural independence., to read as follows:

R302.2.4 Structural independence. Each individual *townhouse* shall be structurally independent.

Exceptions:

1. Foundations supporting *exterior walls* or common walls.

2. Structural roof and wall sheathing from each unit may fasten to the common wall framing.

3. Nonstructural wall and roof coverings.

4. Flashing at termination of roof covering over common wall.

5. *Townhouses* separated by a common 1- or 2-hour fire-resistance-rated wall as provided in Section R302.2.

10. The addition of Exception #3 to Section R302.3, entitled Two-family dwellings., to read as follows:

3. Two-family dwelling units that are also divided by a property line through the structure shall be separated as required for townhouses.

11. The amendment of Section R302.5.2, entitled Duct penetration., to read as follows:

R302.5.2 Duct penetration. Ducts in the garage and ducts penetrating the walls or ceilings separating the dwelling from the garage shall be constructed of a minimum No. 26 gage (0.48 mm) sheet steel or other approved material and shall have no openings into the garage and shall be protected as required by Section 302.11, Item 4.

12. The amendment of Section R302.5.3, entitled Other penetrations., to read as follows:

R302.5.3 Other penetrations. Penetrations through the separation required in Section R302.6 shall be protected as required by Section R302.11, Item 4.

13. The amendment of Section R302.7, entitled Under stair protection., to read as follows:

R302.7 Under stair protection. Enclosed accessible space under stairs shall have walls, under stair surface and any soffits protected on the enclosed side with 5/8-inch (15.8 mm) fire-rated gypsum board or one-hour fire-resistive construction.

14. The amendment of the exceptions to Section R303.3, entitled Bathrooms., to read as follows:

Exception: The glazed areas shall not be required where artificial light and a mechanical ventilation system, complying with one of the following, are provided.

1. The minimum ventilation rates shall be 50 cfm (24 L/s) for intermittent ventilation or 20 cfm (10 L/s) for continuous ventilation. Ventilation air from the space shall be exhausted directly to the outside.

2. Bathrooms that contain only a water closet, a lavatory, or water closet and a lavatory may be ventilated with an approved mechanical recirculating fan or similar device designed to remove odors from the air.

15. The amendment of SECTION R313, entitled AUTOMATIC FIRE SPRINKLER SYSTEMS, to read as follows:

SECTION R313
AUTOMATIC FIRE SPRINKLER SYSTEMS

R313.1 Design and installation. Automatic fire sprinkler systems, when installed and/or repaired, shall comply with Section 903.3 of the 2009 Edition of the International Building Code as adopted.

16. The amendment of Section R315.2, entitled Where required in existing dwellings., to read as follows:

R315.2 Where required in existing dwellings. Where work requiring a building permit for an addition or an alteration to an existing structure that has an attached garage or in existing structure within which fuel-fired appliances exist, carbon monoxide alarms shall be provided in accordance with Section R315.1.

17. The addition of Section R315.4, entitled Power source., to read as follows:

R315.4 Power source. Carbon monoxide alarms shall receive their primary power from the building wiring when such wiring is served from a commercial source, and when primary power is interrupted, shall receive power from a battery. Wiring shall be permanent and without a disconnecting switch other than those required for over current protection.

Exception: Hard-wiring of carbon monoxide alarms in existing areas shall not be required where the addition or alterations do not result in the removal of interior wall or ceiling finishes exposing the structure, unless there is an attic, crawl space or basement available which could provide access for hard wiring and interconnection without the removal of interior finishes.

18. The amendment of SECTION R322, entitled FLOOD RESISTANT CONSTRUCTION, to read as follows:

SECTION R322
FLOOD RESISTANT CONSTRUCTION

R322.1 General. Construction in flood hazard areas. Permits for the construction, reconstruction, rehabilitation, addition or other improvements shall be performed in accordance with the provisions of SECTION 1612 FLOOD LOADS of the International Building Code, as amended.

{The remainder of this Section is deleted in its entirety}

19. The amendment of Section R401.2, entitled Requirements., to read as follows:

R401.2 Requirements. Foundation construction shall be capable of accommodating all loads according to Section R301 and of transmitting the resulting loads to the supporting soil. Fill soils that support footings and foundations shall be designed, installed and tested in accordance with accepted engineering practice. Gravel fill used as footings for wood and precast concrete foundations shall comply with Section R403.

Foundations for the construction of new 1- and 2-family homes and foundations for additions to existing 1- and 2-family homes shall be designed by an engineer licensed by the State of Texas.

20. The amendment of Section R602.6.1, entitled Drilling and notching of top plate., to read as follows:

R602.6.1 Drilling and notching of top plate. When piping or ductwork is placed in or partly in an exterior wall or interior load-bearing wall, necessitating cutting, drilling or notching of the top plate by more than 50 percent of its width, a galvanized metal tie not less than 0.054 inch thick (1.37 mm) (16 Ga) and 5 inches (127 mm) wide shall be fastened across and to the plate at each side of the opening with not less than eight 10d (0.148 inch diameter) having a minimum length of 1 ½ inches (38 mm) at each side or equivalent. Fasteners will be offset to prevent splitting of the top plate material. The metal tie must extend a minimum of 6 inches past the opening. See figure R602.6.1.

21. The amendment of Figure R602.6.1, entitled TOP PLATE FRAMING TO ACCOMMODATE PIPING, to appear as follows:

WALL CONSTRUCTION

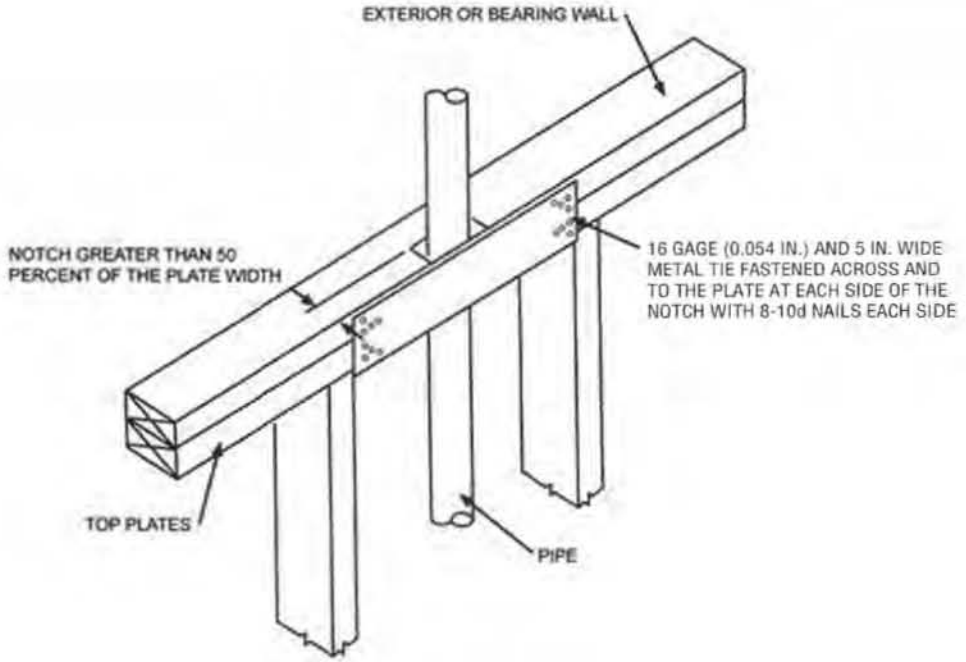

For SI: 1 inch = 25.4 mm

FIGURE R602.6.1
TOP PLATE FRAMING TO ACCOMMODATE PIPING

22. The amendment of Section R703.7.4.1, entitled Size and spacing., to add a second paragraph to read as follows:

For 2.67 square feet (0.248 m^2) of wall area, the following dimensions shall be adhered to:

1. When ties are placed on studs 16" o.c., they shall be spaced no further apart than 24" vertically starting approximately 12" from the foundation.
2. When ties are placed on studs 24" o.c., they shall be spaced no further apart than 16" vertically starting approximately 8" from the foundation.

23. The amendment of Section R902.1, entitled Roofing covering materials., to read as follows:

R902.1 Roofing covering materials. Roofs shall be covered with materials as set forth in Sections R904 and R905. Class A, B or C roofing shall be installed. Classes A, B and C roofing required by this section to be listed shall be tested in accordance with UL 790 or ASTM E 108.

Exceptions:

1. Class A roof assemblies include those with coverings of brick, masonry and exposed concrete roof deck.

2. Class A roof assemblies also include ferrous or copper shingles or sheets, metal sheets and shingles, clay or concrete roof tile, or slate installed on noncombustible decks.

3. Non-classified roof coverings shall be permitted on one-story detached *accessory structures* used as tool and storage sheds, playhouses and similar uses, provided the floor area does not exceed 100 square feet.

24. The deletion of Sections R903.5, R903.5.1 and R903.5.2 in their entireties.

25. The deletion of Figure 903.5, entitled **HAIL EXPOSURE MAP.**

26. The amendment of Section R907.1, entitled General., to add a sentence to read as follows:

All individual replacement shingles or shakes shall comply with Section R902.1.

27. The deletion of Section R907.3 paragraph #4.

28. The amendment of CHAPTER 11, entitled ENERGY EFFICIENCY to read as follows:

SECTION N1101
GENERAL

N1101.1 Scope. This chapter regulates the energy efficiency for the design and construction of buildings regulated by this code.

Exception: Portions of the building envelope that do not enclose conditioned space .

N1101.2 Compliance. Compliance shall be demonstrated by meeting the requirements of the International Energy Conservation Code.

29. The amendment of Section M1305.1.3, entitled Appliances in attics., to read as follows:

M1305.1.3 Appliances in attics. Attics containing appliances requiring access shall be provided with an opening and a clear and unobstructed passageway large enough to allow removal of the largest appliance, but not less than 30 inches (762 mm) high and 22 inches (559 mm) wide and not more than 20 feet (6096 mm) in length when measured along the centerline of the passageway from the opening to the appliance. The passageway shall have continuous, unobstructed solid flooring not less than 24 inches (610 mm) wide. A level service space at least 30 inches (762 mm) deep and 30 inches (762 mm) wide shall be present along all sides of the appliance where access is required. The clear access opening dimensions shall be a minimum of 20 inches by 30 inches (508 mm by 762 mm), or larger where such dimensions are not large enough to allow removal of the largest appliance. As a minimum, access to the attic space shall be provided by one of the following:

1. A permanent stair.
2. A pull down stair with a minimum 300 lb (136 kg) capacity.
3. An access door from an upper floor level.

Exceptions:

1. The passageway and level service space are not required where the appliance can be serviced and removed through the required opening.

2. Where the passageway is unobstructed and not less than 6 feet (1829 mm) high and 22 inches (559 mm) wide for its entire length, the passageway shall be not more than 50 feet (15 250 mm) long.

30. The amendment of Section M1305.1.3.1, entitled Electrical requirements., to add a sentence to read as follows:

Low voltage wiring of 50 Volts or less shall be installed in a manner to prevent physical damage.

31. The amendment of Section M1305.1.4.1, entitled Ground clearance., to read as follows:

M1305.1.4.1 Ground clearance. Appliances supported from the ground shall be level and firmly supported on a concrete slab or other approved material extending above the adjoining grade a minimum of 3 inches (76 mm). Appliances suspended from the floor shall have a clearance of not less than 6 inches (152 mm) above the ground.

32. The amendment of Section M1305.1.4.3, entitled Electrical requirements., to add a sentence to read as follows:

Low voltage wiring of 50 Volts or less shall be installed in a manner to prevent physical damage.

33. The amendment of Section M1307.3.1, entitled Protection from impact., by deleting it in its entirety.

34. The amendment of Section M1411.3, entitled Condensate disposal., to read as follows:

M1411.3 Condensate disposal. Condensate from all cooling coils and evaporators shall be conveyed from the drain pan outlet to a sanitary sewer through a trap, by means of a direct or indirect drain. Condensate shall not discharge in a publicly exposed area such as into a street, alley, sidewalk or other areas so as to cause a nuisance.

Exceptions:

1. Condensate may discharge directly to a roof drain that connects to an underground storm sewer system,

2. Condensate may discharge directly onto roofs covered with membrane type roof coverings where the condensate will drain to a roof drain that connects to an underground storm sewer system,

3. Condensate may discharge to a landscaped area containing flowers and other bedding plants other than turf. There must be five square feet of landscaped area for each ton of refrigeration, or

4. Condensate may discharge to a French drain consisting of a pit excavated below grade that is not less than 24 inches (610 mm) in any dimension. The pit shall be filled with coarse gravel and the drainpipe shall extend into the pit and be securely anchored. A single drain shall not receive the condensate discharge of more than 10 tons nominal of combined cooling capacity. The pit shall be covered with sod after inspection. The French drain shall not be located so that it will receive direct discharge from a roof or downspout.

35. The amendment of Section M1502.4.1, entitled Material and size., to read as follows:

M1502.4.1 Material and size. Exhaust ducts shall have a smooth interior finish and shall be constructed of metal a minimum 0.016-inch (0.4mm) thick. The exhaust duct size shall be 4 inches (102 mm) nominal in diameter. The size of duct shall not be reduced along its developed length or at the point of termination.

36. The amendment of Section M1502.4.4.1, entitled Specified length., to read as follows:

M1502.4.4.1 Specified length. The maximum length of the exhaust duct shall be 35 feet (10668 mm) from the connection to the transition duct from the appliance to the outlet terminal. Where fittings are used, the maximum length of the exhaust duct shall be reduced in accordance with Table M1502.4.4.1.

37. The deletion of Section M1502.4.4.2, Manufacturer's instructions.

38. The deletion of Section M1502.4.5, Length identification.

39. The deletion of the exception to Section M1502.4.6, Exhaust duct required.

40. The amendment of Section M2005.2, entitled Prohibited locations., to read as follows:

M2005.2 Prohibited locations. Fuel-fired water heaters shall not be installed in a room used as a storage closet. Water heaters located in a bedroom or bathroom shall be installed in a sealed enclosure so that combustion air will not be taken from the living space. Access to such enclosure may be from the bedroom or bathroom when through a solid door, weather-stripped in accordance with the exterior door air leakage requirements of the *International Energy Conservation Code* and

equipped with an approved self-closing device. Direct-vent water heaters are not required to be installed within an enclosure.

41. The amendment of Section G2412.5 (401.5), entitled Identification., to add a second paragraph to read as follows:

Both ends of each section of medium pressure corrugated stainless steel tubing (CSST) shall identify its operating gas pressure with an approved tag. The tags are to be composed of aluminum or stainless steel and the following wording shall be stamped into the tag:

"WARNING
½ to 5 psi gas pressure
Do Not Remove"

42. The amendment of Section G2413.3 (402.3), entitled Sizing., to add an exception to read as follows:

EXCEPTION: Corrugated stainless steel tubing (CSST) shall be a minimum of ½".

43. The addition of Section G2415.5.1 (404.5.1), entitled Additional protection of CSST piping., to read as follows:

G2415.5.1 (404.5.1) Additional protection of CSST piping. Where Corrugated Stainless Steel Tubing (CSST) piping is installed in exterior wall cavities, insulated wall cavities and/or insulated roof/ceiling assemblies, the CSST piping must be protected for its entire length with flexible metal conduit (per the UL-1 Standard or its equivalent), Schedule 40 steel pipe, or approved strike plates. The additional protection must extend a minimum of 18 inches (457.2 mm) beyond where the CSST piping exits the wall cavities and/or the roof/ceiling assemblies.

44. The amendment of Section G2415.10 (404.10), entitled Minimum burial depth., to read as follows:

G2415.10 (404.10) Minimum burial depth. Underground piping systems shall be installed a minimum depth of 18 inches (458 mm) below grade.

45. The amendment of Section G2415.10.1 (404.10.1), entitled Individual outside appliances., by deleting it in its entirety.

46. The amendment of Section G2417.1 (406.1), entitled General., to read as follows:

G2417.1 (406.1) General. Prior to acceptance and initial operation, all piping installations shall be inspected and pressure tested to determine that the materials, design, fabrication, and installation practices comply with the requirements of this code. The permit holder shall make the applicable tests prescribed in Sections 2417.1.1 through 2417.7.5 to determine compliance with the provisions of this code. The permit holder shall give reasonable advance notice to the code official when the piping system is ready for testing. The equipment, material, power and labor necessary for the inspections and test shall be furnished by the permit holder and the permit holder shall be responsible for determining that the work will withstand the test pressure prescribed in the following tests.

47. The amendment of Section G2417.4 (406.4), entitled Test pressure measurements., to read as follows:

G2417.4 (406.4) Test pressure measurement. Test pressure shall be measured with a monometer or with a pressure-measuring device designed and calibrated to read, record, or indicate a pressure loss caused by leakage during the pressure test period. The source of pressure shall be isolated before the pressure tests are made. For tests requiring a pressure up to 5 psig, diaphram gauges shall utilize a dial with a set hand, 1/10 pound incrementation and pressure range not to exceed 15 psi. For tests requiring a pressure over 5 psig and up to 10 psig, diaphram gauges shall utilize a dial with a set hand, a minimum of 2/10 pound incrementation and a pressure range not to exceed 30 psi.

48. The amendment of Section G2417.4.2 (406.4.2), entitled Test duration., to read as follows:

G2417.4.2 (406.4.2) Test duration. Test duration shall be held for a length of time satisfactory to the Code Official, but in no case for less than ten (10) minutes.

49. The addition of Section G2420.1.4, entitled Valves in CSST installations., to read as follows:

G2420.1.4 Valves in CSST installations. Shutoff valves installed with corrugated stainless steel (CSST) piping systems shall be supported with an approved termination fitting, or equivalent support, suitable for the size of the valves, of adequate strength and quality, and located at intervals so as to prevent or damp out excessive vibration but in no case greater than 12-inches from the center of the valve. Supports shall be installed so as not to interfere with the free expansion and contraction of the system's piping, fittings, and valves between anchors. All valves and supports shall be designed and installed so they will not be disengaged by movement of the supporting piping.

50. The amendment of Section G2421.1 (410.1), entitled Pressure regulators., to add a second paragraph and an exception to read as follows:

Access to regulators shall comply with the requirements for access to appliances as specified in Section M1305.

EXCEPTION: A passageway or level service space is not required when the regulator is capable of being serviced and removed through the required attic opening.

51. The amendment of Section G2422.1.2.3 (411.1.3.3), entitled Prohibited locations and penetrations., is amended by deleting exception #4.

52. The amendment of Section G2439.5 (613.6), entitled Clothes dryer ducts., to add a sentence to read as follows:

The size of duct shall not be reduced along its developed length nor at the point of termination.

53. The deletion of Section G2439.5.5.2 (614.6.5.2), entitled Manufacturer's instructions., in its entirety.

54. The deletion of Section G2439.5.6 (614.6.5), entitled Length identification., in its entirety.

55. The deletion of the exception to G2439.5.7 (614.6.6), entitled Exhaust duct required.

56. The amendment of Section P2503.8.2, entitled Testing., to read as follows:

P2503.8.2 Testing. Reduced pressure principle backflow preventers, double check valve assemblies, double-detector check valve assemblies and pressure vacuum breaker assembles shall be tested at the time of installation, immediately after repairs or relocation at regular intervals as required by applicable state or local provisions.

57. The addition of Section P2603.6.1, entitled Sewer depth., to read as follows:

P2603.6.1 Sewer depth. Building sewers shall be a minimum of 12 inches (304 mm) below grade.

58. The amendment of Section P2801.6, entitled Water heaters installed in garages., to add an exception to read as follows:

EXCEPTION: Elevation of the ignition source is not required for water heaters that are listed as flammable vapor resistant and for installation without elevation.

59. The amendment of Section P2803.6.1, entitled Requirements for discharge pipe., by adding item #14 to read as follows:

    14. When discharging outside the building, the point of discharge shall be with the end of the pipe not more than two (2) feet (610 mm) nor less than six (6) inches (152 mm) above the ground.

60. The amendment of Section P2902.5.3, entitled Lawn irrigation systems, to read as follows:

    P2902.5.3 Lawn irrigation systems. The potable water supply system to lawn irrigation systems shall be protected as provided for in the Irrigation Chapter.

61. The amendment of Section P3005.2.6, entitled Base of Stacks., to read as follows:

    P3005.2.6 Upper Terminal. Each horizontal drain shall be provided with a cleanout at its upper terminal.

    Exception: Cleanouts may be omitted on a horizontal drain less than five (5) feet (1524 mm) in length unless such line is serving sinks or urinals.

62. The deletion of Section P3111, COMBINATION WASTE AND VENT SYSTEM it its entirety.

63. The amendment of Section P3112.2, entitled Vent connection., including the title, to read as follows:

    P3112.2 Installation. Traps for island sinks and similar equipment shall be roughed in above the floor and may be vented by extending the vent as high as possible, but not less than the drainboard height and then returning it downward and connecting it to the horizontal sink drain immediately downstream from the vertical fixture drain. The return vent shall be connected to the horizontal drain through a wye-branch fitting and shall, in addition, be provided with a foot vent taken off the vertical fixture vent by means of a wye-branch immediately below the floor and extending to the nearest partition and then through the roof to the open air or may be connected to other vents at a point not less than six (6) inches (152 mm) above the flood level rim of the fixtures served. Drainage fittings shall be used on all parts of the vent below the floor level and a minimum slope of

one-quarter (1/4) inch per foot (20.9 mm/m) back to the drain shall be maintained. The return bend used under the drainboard shall be a one (1) piece fitting or an assembly of a forty-five (45) degree (0.79 radius), a ninety (90) degree (1.6 radius) and a forty-five (45) degree (0.79 radius) elbow in the order named. Pipe sizing shall be as elsewhere required in this Code. The island sink drain, upstream of the return vent, shall serve no other fixtures. An accessible cleanout shall be installed in the vertical portion of the foot vent.

64. The deletion of Section P3112.3, entitled Vent installation below the fixture flood level rim., in its entirety.

65. The amendment of Appendix G, entitled SWIMMING POOLS, SPAS AND HOT TUBS, to read as follows:

APPENDIX G
SWIMMING POOLS, SPAS AND HOT TUBS

SECTION AG 101
GENERAL

AG 101.1 General. The provisions of this appendix shall control the design and construction of swimming pools, spas and hot tubs installed in or on the lot of a one- and two-family dwelling.

SECTION AG 102
PERMITS AND INSPECTIONS

AG 102.1 Permit Required. A permit shall be required to construct and/or erect a swimming pool. A permit may only be issued to a registrant as set out in Article IV of the Construction Chapter.

AG 102.2 Submittal required. An application for a permit to construct and/or erect a swimming pool shall be accompanied by the following:

1. Two (2) site plans indicating the location of the proposed swimming pool and the associated swimming pool decks on the lot that have been stamped by the electrical service provider,
2. Lot grading plans, including surface drain inlets and discharges, for both before and after construction,
3. The plans for pool barrier compliance, and
4. Any additional information that may be required by the Building Official.

AG 102.3 Inspection required. After an application for a permit to construct and/or erect a swimming pool has been issued in accordance

with Article IV of the Construction Chapter, the following inspections are required as a minimum as applicable:

1. Belly steel inspection,
2. Electrical bonding inspection,
2.1. Pool entrapment protection system,
3. Underground electrical inspection,
4. Underground plumbing and gas piping inspection, and
5. Final inspection to include verification of swimming pool barrier compliance (prior to plastering the swimming pool).

AG 102.4 Lot grading and surface drainage. The construction and/or erection of a swimming pool may not alter the lot grading or drainage patterns intended by the lot's approved grading plan and/or the subdivision's approved grading and drainage plans. The point of discharge of collected surface drains and rain gutters may not exit onto adjacent properties as a concentrated point of discharge.

AG 102.5 It shall be unlawful for the registrant to permit or cause the swimming pool to be filled with water before the existence of a lawful swimming pool barrier is inspected and approved.

SECTION AG 103
DEFINITIONS

AG 103.1 General. For the purposes of these requirements, the terms used shall be defined as follows and as set forth in Chapter 2.

ABOVE-GROUND/ON-GROUND POOL. See "Swimming pool."

BARRIER. A fence, wall, building wall or combination thereof which completely surrounds the swimming pool and obstructs access to the swimming pool.

HOT TUB. See "Swimming pool."

IN-GROUND POOL. See "Swimming pool."

POOL DECK. A flat walking surface consisting of wood, stone, brick, concrete or other similar material located within 5 feet (1524 mm) of the water's edge of a swimming pool.

RESIDENTIAL. That which is situated on the premises of a detached one- or two-family dwelling or a one-family townhouse not more than three stories in height.

SELF-CLOSING GATE. A gate which closes or shuts automatically without the aid of human, electrical, solar or battery power after being opened.

SELF-CLOSING AND SELF-LATCHING DEVICE. A device that causes a gate to automatically close and latch without human, electrical, solar or battery power.

SPA, NONPORTABLE. See "Swimming pool."

SPA, PORTABLE. A nonpermanent structure intended for recreational bathing, in which all controls, water-heating and water-circulating equipment are an integral part of the product.

SWIMMING POOL. Any structure intended for swimming or recreational bathing that contains water over 24 inches (610 mm) deep. This includes in-ground, above-ground and on-ground swimming pools, hot tubs and spas.

SWIMMING POOL, INDOOR. A swimming pool which is totally contained within a structure and surrounded on all four sides by walls of said structure.

SWIMMING POOL, OUTDOOR. Any swimming pool which is not an indoor pool.

SECTION AG 104
SWIMMING POOLS

AG 104.1 In-ground pools. In-ground pools shall be designed and constructed in conformance with ANSI/NSPI-5 as listed in Section AG108.

AG 104.2 Above-ground and on-ground pools. Above-ground and on-ground pools shall be designed and constructed in conformance with ANSI/NSPI-4 as listed in Section AG108.

SECTION AG 105
SPAS AND HOT TUBS

AG 105.1 Permanently installed spas and hot tubs. Permanently installed spas and hot tubs shall be designed and constructed in conformance with ANSI/NSPI-3 as listed in Section AG 108.

AG 105.2 Portable spas and hot tubs. Portable spas and hot tubs shall be designed and constructed in conformance with ANSI/NSPI-6 as listed in Section AG108.

SECTION AG 106
BARRIER REQUIREMENTS

AG 106.1 Application. The provisions of this chapter shall control the design of barriers for residential swimming pools, spas and hot tubs. These design controls are intended to provide protection against potential drownings and near-drownings by restricting access to swimming pools, spas and hot tubs.

AG 106.2 Outdoor swimming pool. An outdoor swimming pool, including an in-ground, above-ground or on-ground pool, hot tub or spa shall be provided with a barrier which shall comply with the following:

1. The top of the barrier shall be at least 48 inches (1219 mm) above grade measured on the side of the barrier which faces away from the swimming pool. The maximum vertical clearance between grade and the bottom of the barrier shall be 2 inches (51 mm) measured on the side of the barrier which faces away from the swimming pool. Where the top of the pool structure is above grade, such as an above-ground pool, the barrier may be at ground level, such as the pool structure, or mounted on top of the pool structure. Where the barrier is mounted on top of the pool structure, the maximum vertical clearance between the top of the pool structure and the bottom of the barrier shall be 4 inches (102 mm).
2. Openings in the barrier shall not allow passage of a 4-inch-diameter (102 mm) sphere.
3. Solid barriers which do not have openings, such as a masonry or stone wall, shall not contain indentations or protrusions except for normal construction tolerances and tooled masonry joints.
4. Where the barrier is composed of horizontal and vertical members and the distance between the tops of the horizontal members is less than 45 inches (1143 mm), the horizontal members shall be located on the swimming pool side of the fence. Spacing between vertical members shall not exceed 1.75 inches (44 mm) in width. Where there are decorative cutouts within vertical members, spacing within the cutouts shall not exceed 1.75 inches (44 mm) in width.
   EXCEPTION: When the horizontal members are part of a fence that is at least 6 feet (1829 mm) in height, the horizontal members need not be on the pool side of the barrier.
5. Where the barrier is composed of horizontal and vertical members and the distance between the tops of the horizontal members is 45

inches (1143 mm) or more, spacing between vertical members shall not exceed 4 inches (102 mm). Where there are decorative cutouts within vertical members, spacing within the cutouts shall not exceed 1.75 inches (44 mm) in width.

6. Maximum mesh size for chain link fences shall be a 1.25-inch (32 mm) square unless the fence is provided with slats fastened at the top or the bottom which reduce the openings to not more than 1.75 inches (44 mm).
7. Where the barrier is composed of diagonal members, such as a lattice fence, the maximum opening formed by the diagonal members shall not be more than 1.75 inches (44 mm).
8. Access gates shall comply with the requirements of Section AG 106.2, Items 1 through 7, and shall be equipped to accommodate a locking device. Pedestrian access gates shall open outward away from the pool and shall be self-closing and have a self-latching device. Gates other than pedestrian access gates shall have a self-latching device. Where the release mechanism of the self-latching device is located less than 54 inches (1372 mm) from the bottom of the gate, the release mechanism and openings shall comply with the following:
   - 8.1. The release mechanism shall be located on the pool side of the gate at least 3 inches (76 mm) below the top of the gate, and
   - 8.2. The gate and barrier shall have no opening greater than 0.5 inch (12.7 mm) within 18 inches (457 mm) of the release mechanism.
   - 8.3. Driveway access gates across a paved or improved surface intended for regular vehicle access shall not be located in a swimming pool barrier.
9. Where a wall of a dwelling serves as part of the barrier one of the following conditions shall be met:
   - 9.1. All doors with direct access to the pool through that wall shall be equipped with an alarm which produces an audible warning when the door and its screen, if present, are opened. The alarm shall sound continuously for a minimum of 30 seconds immediately after the door is opened and be capable of being heard throughout the house during normal household activities. The alarm shall automatically reset under all conditions. The alarm system shall be equipped with a manual means, such as touchpad or switch, to temporarily deactivate the alarm for a single opening. Such deactivation shall last for not more than 15 seconds. The deactivation switch(es) shall be located at least 54 inches (1372 mm) above the threshold of the door; or

9.2. Other means of protection, such as self-closing doors with self-latching devices, which are approved by the governing body, shall be acceptable so long as the degree of protection afforded is not less than the protection afforded by Item 9.1 described above.

10. Where an above-ground pool structure is used as a barrier or where the barrier is mounted on top of the pool structure and the means of access is a ladder or steps, then:

10.1. The ladder or steps shall be capable of being secured, locked or removed to prevent access, or

10.2. The ladder or steps shall be surrounded by a barrier which meets the requirements of Section AG 106.2, Items 1 through 9. When the ladder or steps are secured, locked or removed, any opening created shall not allow the passage of a 4-inch-diameter (102 mm) sphere.

AG 106.3 Indoor swimming pool. All walls surrounding an indoor swimming pool shall comply with Section AG 106.2, Item 9.

AG 106.4 Prohibited locations. Barriers shall be located so as to prohibit permanent structures, equipment or similar objects from being used to climb the barriers.

AG 106.5 Barrier exceptions. Spas or hot tubs with a safety cover which complies with ASTM F 1346, as listed in Section AG 108, shall be exempt from the provisions of this appendix.

SECTION AG 107
ENTRAPMENT PROTECTION FOR SWIMMING POOL AND SPA SUCTION OUTLETS

AG 107.1.General. Suction outlets shall be designed and installed in accordance with ANSI/APSP-7.

SECTION AG 108
ABBREVIATIONS

AG 108.1 General.

ANSI-American National Standards Institute, 11 West 42nd Street, New York, NY 10036

ASTM-American Society for Testing and Materials, 1916 Race Street, Philadelphia, PA 19103

NSPI-National Spa and Pool Institute, 2111 Eisenhower Avenue, Alexandria, VA 22314

SECTION AG 109
STANDARDS

AG 109.1 General.

ANSI/NSPI

ANSI/NSPI-3 Standard for Permanently Installed Residential SpasAG 105.1

ANSI/NSPI-4 Standard for Above-ground/On-ground Residential Swimming Pools. .....AG 104.2

ANSI/NSPI-5 Standard for Residential In-ground Swimming Pools.AG 104.1

ANSI/NSPI-6 Standard for Residential Portable Spas. .....AG 105.2

ASME/ANSI
112.19.8-2007 Suction Fittings for Use in Swimming Pools, Wading Pools, Spas, Hot Tubs and Whirlpool Bathing Appliances.....AG1 07.1

ANSI/APSP-7-06 Standard for Suction Entrapment Avoidance in Swimming Pools, Wading Pools, Spas, Hot Tubs and Catch Basins.....AG 107.1

ASTM

ASTM F 1346-91 Standard Performance Specifications for Safety Covers and Labeling Requirements for All Covers for Swimming Pools, Spas and Hot Tubs. .....AG 105.2, AG 105.5

Further, Article I, **Section 1.04**, Subsection (E), is hereby amended so that hereafter said subsection shall read as follows:

E. The amendment of the following I.E.C.C. provisions:

1. The amendment of Section 101.1, entitled Title., to read as follows:

101.1 Title. This code shall be known as the International Energy Conservation Code of the City of Arlington, Texas, and shall be cited as such. It is referred to herein as "this code."

2. The amendment of Section 101.4.2, Historic buildings., to read as follows:

101.4.2 Historic buildings. Any building or structure that is listed in the State of National Register of Historic Places; designated as a historic property under local or state designation law or survey; certified as a contributing resource with a National Register listed or locally designated historic district; or with an opinion or certification that the property is eligible to be listed on the National or State Registers of Historic places either individually or as a contributing building to a historic district by the State Historic Preservation Officer or the Keeper of the National Register of Historic Places, shall comply with all of the provisions of this code.

Exception: Whenever a provision or provisions shall invalidate or jeopardize the historical designation or listing, that provision or provisions may be exempted.

3. The addition of Section 102.1.2, entitled Alternative compliance., to read as follows:

Alternative compliance. A building certified by a national, state, or local accredited energy efficiency program and determined by the Energy Systems Laboratory to be in compliance with the energy efficiency requirements of this section may, at the option of the Code Official, be considered in compliance. The United States Environmental Protection Agency's Energy Star Program certification of energy code equivalency shall be considered in compliance.

4. The amendment of Section 202, GENERAL DEFINITIONS, by the addition of the following definition:

GLAZING AREA. Total area of the glazed fenestration measured using the rough opening and including sash, curbing or other framing elements that enclose conditioned space. Glazing area includes the area of glazed fenestration assemblies in walls bounding conditioned basements. For doors where the daylight opening area is less that 50 percent of the door area, the glazing area is the daylight opening area. For all other doors, the glazing area is the rough opening area for the door including the door and the frame.

5. The amendment of Section 301, entitled CLIMATE ZONES, to read as follows:

SECTION 301
CLIMATE ZONES

301.1 General. The City of Arlington, Texas is designated as Climate Zone 3 – A (Moist)/Warm and humid.

6. The amendment of Section 401.2, entitled Compliance., to read as follows:

401.2 Compliance. Projects shall comply with Sections 401, 402.4, 402.5, and 403.1, 403.2.2, 403.2.3, and 403.3 through 403.9 (referred to as the mandatory provisions) and either:

1. Sections 402.1 through 402.3, 403.2.1 and 404.1 (prescriptive) and the use of Tables 402.1.1 and 402.1.3 are limited to a maximum *glazing area* of 15% window area to floor area ratio; or

2. Section 405 (performance).

7. The addition of Section 401.2.1, entitled Compliance software tool., to read as follows:

401.2.1. Compliance software tools. Software tools used to demonstrate energy code compliance that are deemed acceptable by the building official. The PNL program REScheck™ is not acceptable for residential compliance.

Exception: The PNL program REScheck™, UA Alternate compliance approach method may be used when the compliance certificate demonstrates that the maximum glazing area does not exceed 15% of the conditioned floor area.

8. The amendment of Table 402.1.1, entitled INSULATION AND FENESTRATION REQUIREMENTS BY COMPONENT, by adding footnotes l and m to read as follows:

l. Any glazing facing within 45 degrees of true north is exempt from the minimum SHGC requirement.

m. Any glazing facing within 45 degrees of true south which is shaded along its full width by a permanent overhang with a projection factor of 0.3 or greater is exempt from the minimum SHGC requirement.

9. The amendment of Section 402.1.4, entitled Total UA alternative., to read as follows:

402.1.4 Total UA alternative. If the total building thermal envelope UA (sum of U -factor times assembly area) is less than or equal to the total UA resulting from using the U -factors in Table 402.1.3 (multiplied by the same assembly area as in the proposed building), the building shall be considered in compliance with Table 402.1.1. The UA calculation shall be done using a method consistent with the ASHRAE Handbook of Fundamentals and shall include the thermal bridging effects of framing materials. The SHGC requirements shall be met in addition to UA compliance. The use of Table 402.1.3 is limited to a maximum glazing are or 15% window area to floor area ratio.

10. The addition of Section 402.2.12, entitled Insulation installed in walls., to read as follow:

402.2.12. Insulation installed in walls. Insulation batts installed in walls shall be totally surrounded by an enclosure on all sides consisting of framing lumber, gypsum, sheathing, wood structural panel sheathing or other equivalent material approved by the building official.

11. The amendment of Section 402.4.2.1, Testing option., to read as follows:

402.4.2.1 Testing option. Building envelope tightness and insulation installation shall be considered acceptable when tested air leakage is less than seven air changes per hour (ACH) when tested with a blower door at a pressure of 33.5 psf (50 Pa). Testing shall occur after rough in and after installation of penetrations of the building envelope, including penetrations for utilities, plumbing, electrical, ventilation and combustion appliances.

During testing:

1. Exterior windows and doors, fireplace and stove doors shall be closed, but not sealed;

2. Dampers shall be closed, but not sealed, including exhaust, intake, makeup air, backdraft and flue dampers;

3. Interior doors shall be open;

4. Exterior openings for continuous ventilation systems and heat recovery ventilators shall be closed and sealed;

5. Heating and cooling system(s) shall be turned off;

6. HVAC ducts shall not be sealed; and

7. Supply and return registers shall not be sealed.

Testing may only be performed by individuals that are certified HERS Raters or Rating Field Inspectors by RESNET or Performance Verification Technicians, or other certifications as may be approved by the building official. The certified individuals must be an independent third-party entity, and may not be employed; or have any financial interest in the company that constructs the structure.

12. The amendment of Section 403.2.2, Sealing (Mandatory)., to add paragraph #3 to read as follows:

    3. Testing may only be performed by individuals that are certified HERS Raters or Rating Field Inspectors by RESNET or Performance Verification Technicians, or other certifications as may be approved by the building official. The certified individuals must be an independent third-party entity, and may not be employed; or have any financial interest in the company that installed the duct system.

13. The amendment of Section 405.4.1, entitled Compliance software tools., to read as follows:

    405.4.1 Compliance software tools. Documentation verifying that the methods and accuracy of the compliance software tools conform to the provisions of this section shall be provided to the code official.

    RemRate™, *Energy Gauge™*(when used in conjunction with the United States Environmental Protection Agency's Energy Star Program certification of energy code equivalency), and the *International Code Calculator (IC3)* are deemed acceptable performance simulation programs.

14. The addition of Section 502.2.8, entitled Insulation installed in walls., to read as follows:

    502.2.8. Insulation installed in walls. Insulation batts installed in walls shall be totally surrounded by an enclosure on all sides consisting of framing lumber, gypsum, sheathing, wood structural panel sheathing or other equivalent material approved by the building official.

15. The amendment of Table 505.6.2(1), entitled EXTERIOR LIGHTING ZONES, to read as follows:

TABLE 505.6.2(1)
EXTERIOR LIGHTING ZONES [1, 2]

LIGHTING ZONE	DESCRIPTION
1	A-Agricultural and E-Estate Districts and park areas
2	Residential and multifamily zoning districts, O-Office, NS-Neighborhood Services, CS-Community Services, light industrial with limited nighttime use and residential mixed use areas
3	B-Business LI-Light Industrial IM-Industrial Manufacturing
4	Non-Residential zoning districts in the ED-Entertainment District Overlay

[1] The lighting zone references the zoning district classification as set forth in the Zoning Ordinance.
[2] The lighting zone for mixed use districts may be determined by the building official on a case by case basis.

Further, Article I, **Section 1.05,** Adoption of Appendices, is hereby amended so that hereafter said section shall read as follows:

Section 1.05 Adoption of Appendices

The following referenced provisions of the I.B.C., I.R.C. and I.E.C.C. annexed hereto as appendices, the same being either attached hereto or incorporated herein by reference, are made a part of this Building Code.

Appendix A. Only Appendix C, entitled GROUP U-AGRICULTURAL BUILDINGS; of the Appendix to the International Building Code, 2009 Edition.

All other Chapters of said Appendix to the I.B.C. are hereby omitted from this Building Code.

Appendix B. Only Appendix G, entitled SWIMMING POOLS, SPAS AND HOT TUBS, as amended, of the Appendix to the International Residential Code, 2009 Edition.

All other Chapters of said Appendix to the I.R.C. are hereby omitted from this Building Code.

Further, Article IV, Registration, Permits and Inspections, **Section 4.01**, Registration, **Subsection (F)**, is hereby amended by the addition of Subsections (5) – (7), so that hereafter said subsections shall read as follows:

5. Failure of a registered contractor to secure permits prior to commencement of work necessitating such permit.

6. Failure of a registered contractor to request all inspections as may be established by the Construction Chapter.

7. Failure of a registered contractor to provide the Building Official accurate revisions of registration information, including any change of address or telephone number and/or licensees.

Further, Article IV, **Section 4.01**, is hereby amended by the amendment of **Subsection (H)**, so that hereafter said subsection shall read as follows:

H. **Suspension or Revocation Hearing**. In considering charges under this article regarding suspension or revocation of a registration, the Building Code Board of Appeals shall proceed upon sworn information furnished it by any person or upon information provided by the Building Official. Such information shall be in writing and shall be duly verified by the person familiar with the allegations made. The Board shall make an order setting the matter for hearing at a specified time and place, and the Secretary of the Board shall cause a copy of the Board's order and of the sworn information to be served upon the Registrant by registered mail at least fifteen (15) days before the date set for the hearing. The Registrant may appear in person or by counsel at the time and place named in the order and present a defense to the Board. The City Attorney for the City of Arlington shall provide counsel for the Board. If the Registrant fails or refuses to appear, the Board may proceed to hear and determine the charge in the registrant's absence. If the registrant pleads guilty or if, upon a hearing, the Board finds any of the charges to be true, it may enter an order suspending or revoking the certificate of registration. Failure to properly perfect an appeal in a court of competent jurisdiction within ten (10) days of receipt of the Board's decision shall render the Board's decision final. Suspension or revocation of a registration resulting from a decision of the Board shall preclude the Registrant from securing a permit for work controlled by that registration in the City of Arlington or from becoming so registered under any different identification as long as the suspension or revocation is in effect.

Further, Article IV, **Section 4.02**, is hereby amended so that hereafter said section shall read as follows:

Section 4.02 <u>Commercial Site Plan and Permits Required</u>

A. It shall be unlawful for any Registrant or person without first obtaining a separate building permit for such work from the Building Official:

1. to erect, construct, enlarge, alter, repair, move, improve, remove, convert or demolish any building or structure;

   EXCEPTION: see exceptions in paragraphs B and C below.

2. to install, enlarge or repair any fence;

   EXCEPTION: Repair or replacement of fencing where not less than 50% of one side of the fence is being repaired and/or replaced.

3. to erect, alter a sign, including the copy face or lettering of any sign, either by changing the message or by renovating an existing message, or erect any sign or sign structure;

   EXCEPTION: Changing a changeable copy message or a message center sign message; general maintenance such as repainting the same message or changing the face of a sign permitted as an off-site advertising sign;

4. to reroof any building or structure;

5. to excavate, grade, or fill property, or cause the same to be done;

   EXCEPTION: Excavation for construction of a structure permitted under this code; Refuse disposal sites controlled by other regulations; Excavations for wells, or trenches for utilities; Mining, quarrying, excavating, processing or stockpiling rock, sand, gravel, aggregate or clay controlled by other regulations, provided such operations do not affect the lateral support of, or significantly increase stresses in, soil on adjoining properties; or, Exploratory excavations performed under the direction of a registered design professional.

Separate permits are required for electrical, plumbing and mechanical work as set forth in the Electrical, Mechanical and Plumbing Chapters of this Code.

B. Permits shall not be required for the following items. Exemption from permit requirements of this code shall not be deemed to grant authorization for any work to be done in any manner in violation of the provisions of this code or any other laws or ordinances.

1. Retaining walls that are not over 4 feet (1219 mm) in developed height at any point when measured from the bottom of the footing to the top of the

wall, unless supporting a surcharge or imposed load or impounding Class I, II or IIIA liquids. See Article 1 of this Chapter regarding "tiered" retaining walls.

2. Painting, papering, tiling, carpeting, cabinets, counter tops and similar finish work.

3. Swings and other playground equipment.

4. Prefabricated inflatable swimming pools that are less than 24 inches (610 mm) deep.

5. Window awnings supported by an exterior wall which do not project more than 54 inches (1372 mm) from the exterior wall and do not require additional support.

6. Flatwork (pedestrian sidewalks, vehicle parking and maneuvering areas) on private property.

7. Replacement of siding materials with materials of similar character. The installation of siding systems such as, but not necessarily limited to, stucco and Exterior Insulation and Finish Systems, require a permit.

8. Nonfixed and movable fixtures, cases, racks, counters and partitions not over 5 feet 9 inches (1753 mm) in height.

9. Shade cloth structures constructed for nursery or agricultural purposes.

C. For 1-and 2-family structures only regulated by the I.R.C., permits shall not be required for the following items. Exemption from permit requirements of this code shall not be deemed to grant authorization for any work to be done in any manner in violation of the provisions of this code or any other laws or ordinances.

1. Building:

   a. One-story detached accessory structures used as tool and storage sheds and similar uses, provided the floor area does not exceed 100 square feet (9.29 m^2).

2. Electrical:

   a. Listed cord-and-plug connected temporary decorative lighting.

   b. Reinstallation of attachment plug receptacles but not the outlets thereof.

c. Replacement of branch circuit over current devices of the required capacity in the same location.

d. Electrical wiring, devices, appliances, apparatus or equipment operating as less than 25 volts and not capable of supplying more that 50 watts of energy.

e. Minor repair work, including the replacement of lamps or the connection of approved portable electrical equipment to approved permanently installed receptacles.

2. Plumbing

a. Portable heating, cooking or clothes drying appliances.

b. Replacement of any minor part that does not alter approval of equipment or make such equipment unsafe.

c. Portable-fuel-cell appliances that are not connected to a fixed piping system and are not interconnected to a power grid.

d. The stopping of leaks in drains, water, soil, waste or vent pipe; provided, however, that if any concealed trap, drainpipe, water, soil, wasted or vent pipe becomes defective and it becomes necessary to remove and replace the same with new material, such work shall be considered as new work and a permit shall be obtained and inspection made as provided in this code.

e. The clearing of stoppages or the repairing of leaks in pipes, valves or fixtures, and the removal and reinstallation of water closets, provided such repairs do not involve or require the replacement or rearrangement of valves, pipes or fixtures.

3. Mechanical

a. Portable heating appliances.

b. Portable ventilation appliances.

c. Portable cooling units.

d. Steam, hot- or chilled-water piping within any heating or cooling equipment regulated by this code.

e. Replacement of any minor part that does not alter approval of equipment or make such equipment unsafe.

f. Portable evaporative coolers.

g. Self-contained refrigeration systems containing 10 pounds (4.54 kg) or less of refrigerant or that are actuated by motors of 1 horsepower (746 W) or less.

h. Portable-fuel-cell appliances that are not connected to a fixed piping system and are not interconnected to a power grid.

D. Emergency Repairs. Where equipment replacements and repairs must be performed in an emergency situation, the permit application shall be submitted within the next working day to the building official.

E. For other than 1 and 2 family dwellings, approval of a Commercial Site Plan is required prior to filing the application for a building permit. Two copies of the "Accepted for Construction" Commercial Site Plan shall be submitted with each application for a building permit for the following work categories:

1. The construction of a new building,

2. The construction of an addition to an existing building.

3. The grading, excavation or filling of a parcel when such work is not included in the scope of an issued building permit.

F. A Commercial Site Plan shall demonstrate compliance with the applicable zoning, environmental, fire and engineering regulations specific to the proposed project.

G. A permit shall be issued only to a Registrant meeting the conditions of Section 4.01 above, and only after all other requirements defined in this article have been accomplished.

Further, Article IV, **Section 4.03**, Application for Permit, **Subsection (E)**, is hereby amended so that hereafter said section shall read as follows:

E. State the fair market construction valuation of the proposed work;

Further, Article IV, **Section 4.04**, Plans and Specifications, **Subsection (B)**, is hereby amended so that hereafter said section shall read as follows:

B. Plans and specifications shall be drawn to scale and shall be of sufficient clarity to indicate the nature and extent of the work proposed and show in detail that it will conform to the provisions of this Building Code and all other relevant laws,

ordinances, rules and regulations. The first sheet of each set of plans shall give the building and street address where the work is to be performed and the name and address of the owner and person who prepared said plans. Plans shall include a plot plan showing the location of the proposed building and of every existing building on the property. In lieu of detailed specifications, the Building Official may approve references on the plans to a specific section or part of this Building Code or other ordinances or laws. The construction documents shall also be in conformance with the following:

(1) **Means of egress.** The construction documents shall show in sufficient detail the location, construction, size and character of all portions of the means of egress in compliance with the provisions of this code. In other than occupancies in Groups R-2, R-3, and I-1, the construction documents shall designate the number of occupants to be accommodated on every floor, and in all rooms and spaces.

(2) **Exterior wall envelope.** Construction documents for all buildings shall describe the exterior wall envelope in sufficient detail to determine compliance with this code. The construction documents shall provide details of the exterior wall envelope as required, including flashing, intersections with dissimilar materials, corners, end details, control joints, intersections at roof, eaves or parapets, means of drainage, water-resistive membrane and details around openings.

The construction documents shall include manufacturer's installation instructions that provide supporting documentation that the proposed penetration and opening details described in the construction documents maintain the weather resistance of the exterior wall envelope . The supporting documentation shall fully describe the exterior wall system which was tested, where applicable, as well as the test procedure used.

(3) **Demolition permits.** In the case of proposed demolition, the site plan shall show construction to be demolished and the location and size of existing structures and construction that are to remain on the site or plot.

Further, Article IV, **Section 4.05**, **<u>Building Permits Issued</u>**, is hereby amended so that hereafter said section shall read as follows:

A. The Building Official shall examine or cause to be examined the application, plans and specifications filed by an applicant for a permit shall be reviewed. Such plans may also be reviewed by other departments of the City of Arlington to check compliance with the laws and ordinances under their jurisdiction, including but not limited to review by the Engineering, Fire, Community Services, Community Development and Planning, and the Public Works and Transportation Department of the City of Arlington to ensure compliance with the Traffic Study

Provisions adopted by resolution of the City Council. If the Building Official finds that the work described in an application for permit and the plans filed therewith conform to the requirements of this Building Code and other pertinent laws and that the permit fee has been paid, a permit shall be issued.

EXCEPTION: Except by specific approval by the Building Official or an authorized representative, a permit shall not be issued in a development where the construction of streets, drainage, water, sewer and other such public improvement facilities have not been completed and accepted by the City of Arlington.

In lieu of the plan review performed by the Building Official, the owner of a property may choose to contract with a Third Party Provider that is properly registered with the City for plan review. Plan reviews performed by Third Party Organizations are subject to the terms of the program as authorized by resolution of the City Council of the City of Arlington.

B. **Approval of construction documents.** When the building official issues a permit, the construction documents shall be approved, in writing or by stamp, as;

> "CITY OF ARLINGTON APPROVED PLANS. These plans must be kept on the job site and be available at the inspector's request. Changes to these plans must be approved in the same manner as these plans were approved"

One set of construction documents so reviewed shall be retained by the building official. The other set shall be returned to the applicant, shall be kept at the site of work and shall be open to inspection by the building official or a duly authorized representative.

C. Accepted plans and specifications shall not be changed, modified or altered without written authorization from the Building Official, and all work shall be done in accordance with the plans.

D. The Building Official may issue a permit for the construction of part of a building or structure before the entire plans and specifications for the whole building or structure have been submitted or approved, provided adequate information and detailed statements have been filed complying with all pertinent requirements of this Building Code. The holder of such permit shall proceed at personal risk without assurance that the permit for the entire building or structure will be granted.

Deferred submittals.
For the purposes of this section, deferred submittals are defined as those portions of the design that are not submitted to the building official at the time of the application and that are to be submitted to the building official within a specified period.

Deferred submittals shall have the prior approval of the building official. The registered design professional in responsible charge shall list the deferred submittals on the construction documents for review by the building official.

Documents for deferred submittal items shall be submitted to the registered design professional in responsible charge who shall review them and forward them to the building official with a notation indicating that the deferred submittal documents have been reviewed and found to be in general conformance to the design of the building. The deferred submittal items shall not be installed until the deferred submittal documents have been approved by the building official .

E. Upon issuance of a building permit, the Building Official will issue a Building Permit representing that a permit has been issued. The Building Permit shall contain the address and legal description of the location, the name of the general contractor and a description of the work. The Building Permit shall be posted on the job location at all times during the time the building permit is valid and may not be removed until such time that the Building Official issues a final approval. The Building Permit shall be posted in front of the building so that it is visible from the addressed street or fire lane at all times. Work may be ordered to stop when such Building Permit is not displayed in accordance with this section.

Further, Article IV, **Section 4.12**, **Refunds**, is hereby amended so that the first paragraph of said section shall read as follows:

There shall be no refund of any plans review fee. A permit fee may be refunded only upon the following:

Further, Article IV, **Section 4.12**, **Subsection (D)**, is hereby amended so that hereafter said subsection shall read as follows:

D. When the refund is requested in writing within 90 days of the date of payment.

Further, Article IV, **Section 4.13**, **Subsection (A)**, is hereby amended so that hereafter said subsection shall read as follows:

A. **General**. All construction or work for which a permit is required shall be subject to inspection by the Building Official, and certain types of construction may have continuous inspection by special inspectors as specified in Section 4.14 below.

A survey of the lot may be required by the Building Official to verify compliance of the structure with approved plans. It shall be the duty of the permittee to cause the work to be accessible and exposed for inspection purposes.

EXCEPTION: The owner of a property may choose to contract with a Third Party Provider that is properly registered with the City for inspections. Inspections performed by Third Party Organizations are subject to the terms of the program as authorized by resolution of the City Council of the City of Arlington. A Third Party Provider shall not be authorized to grant final approval or grant a Certificate of Occupancy.

Further, Article IV, **Section 4.13**, **Subsection (C)**, is hereby amended so that hereafter said subsection shall read as follows:

C. **Required Inspections**. It shall be the duty of the holder of the building permit or their duly authorized agent to notify the building official when work is ready for inspection. It shall be the duty of the permit holder to provide access to and means for inspections of such work that are required by this code.

Work shall not be done beyond the point indicated in each successive inspection without first obtaining the approval of the building official. The building official, upon notification, shall make the requested inspections and shall either indicate the portion of the construction that is satisfactory as completed, or notify the permit holder or his or her agent wherein the same fails to comply with this code. Any portions that do not comply shall be corrected and such portion shall not be covered or concealed until authorized by the building official.

The Building Official, upon notification from the permit holder or an authorized agent, shall make the following inspections and shall either approve that portion of the construction as completed or shall notify the permit holder or an authorized agent in what respects the same fails to comply with this Building Code:

1. Footing and foundation inspections. Footing and foundation inspections shall be made after excavations for footings are complete and any required reinforcing steel is in place. For concrete foundations, any required forms shall be in place prior to inspection. Materials for the foundation shall be on the job, except where concrete is ready mixed in accordance with ASTM C 94, the concrete need not be on the job.

2. Concrete slab and under-floor inspection. Concrete slab and under-floor inspections shall be made after in-slab or under-floor reinforcing steel and building service equipment, conduit, piping accessories and other ancillary equipment items are in place, but before any concrete is placed or floor sheathing installed, including any subflooring.

3. Lowest floor elevation. In flood hazard areas, upon placement of the lowest floor, including the basement, and prior to further vertical construction, the elevation certification required in Section 1612.5 shall be submitted to the building official.

4. Frame inspection. Framing inspections shall be made after the roof deck or sheathing, all framing, fireblocking and bracing are in place and pipes, chimneys and vents to be concealed are complete and the rough electrical, plumbing, heating wires, pipes and ducts are approved.

5. Lath and gypsum board inspection. Lath and gypsum board inspections shall be made after lathing and gypsum board, interior and exterior, is in place, but before any plastering is applied or gypsum board joints and fasteners are taped and finished.

   Exception: Gypsum board that is not part of a fire-resistance-rated assembly or a shear assembly.

6. Fire-resistant penetrations. Protection of joints and penetrations in fire-resistance-rated assemblies shall not be concealed from view until inspected and approved.

7. Energy efficiency inspections. Inspections shall be made to determine compliance with the energy code and shall include, but not be limited to, inspections for:

   a. envelope air leakage and insulation installation and *R* and *U* values;

   b. fenestration *U* values and SHGC values,

   c. duct system sealing and insulation *R* values;

   d. HVAC and water-heating equipment efficiency, and

   e. Lighting switching and wattage allowances.

8. Other inspections. In addition to the inspections specified above, the building official is authorized to make or require other inspections of any construction work to ascertain compliance with the provisions of this code and other laws that are enforced by the department of building safety.

9. Special inspections. For special inspections, see Section 1704 of the IBC.

10. Final inspection. The final inspection shall be made after all work required by the building permit is completed.

In the event a court of competent jurisdiction determines that lawfully filed deed restrictions or lawfully filed real property restrictive covenants on single family residential property within the City of Arlington would be violated by the construction that is the subject of the final inspection, such court may restrain or enjoin the Building Official from completing a final inspection for a period not to exceed sixty (60) days.

Further, Article IV, **Section 4.13**, **Subsection (D)**, is hereby amended so that hereafter said subsection shall read as follows:

D. **Other Inspections**. In addition to the required inspections specified in Subsection (C) above, the Building Official may make or require any other inspections of any construction work to ascertain compliance with the provisions of this Building Code and other applicable laws which are enforced by the City of Arlington.

For the purpose of determining compliance with I.B.C., Section 3402 the Building Official may cause any structure to be reinspected.

Further, Article IV, **Section 4.14**, Certificate of Occupancy, **Subsection (A)**, is hereby amended so that hereafter said subsection shall read as follows:

A. When required. No premises, building or structure, except Group R-3 and Group U shall be used or occupied until a Certificate of Occupancy has been issued as provided herein. A certificate of occupancy is required when:

1. The initial occupancy of a building or tenant space.

2. To change the tenancy or tenant of building or tenant space.

3. To change the name or ownership of a business.

4. To expand a lease space.

5. To acquire a Certificate of Occupancy for a shell building. A shell Certificate of Occupancy shall not permit the use of the structure for any purposes. A shell Certificate of Occupancy is for purposes of utility releases for house meters.

6. To "clean and show" a building or tenant space. A "clean and show" certificate of occupancy shall not permit the use of the structure with the exception of cleaning and preparing the building or tenant space for showing prospective tenants.

Further, Article IV, **Section 4.14**, **Subsection (B)**, is hereby amended so that hereafter said subsection shall read as follows:

B. Change in Use. Changes in the character of occupancy or use of a building shall not be made, except as specified in I.B.C., Section 3408.

Further, Article IV, **Section 4.14**, **Subsection (C)**, is hereby amended so that hereafter said subsection shall read as follows:

C. Certificate Issued. The Building Official shall issue a Certificate of Occupancy upon a finding that the premises complies with the Building Code, provisions of the "Zoning" Chapter of the Code and all other applicable development regulations of the City of Arlington. For new structures or when the occupant is of a different character of occupancy or use from the previous certificate holder, the Building Inspections Division shall make an inspection. Where no change in character of occupancy is proposed for a structure previously granted a Certificate of Occupancy, no inspection is necessary unless specifically required by the Building Official. In the event that a tenant space is being altered, enlarged or reduced in size, or if the Building Official believes that the previous tenant altered the space without benefit of permits, an inspection may be required prior to the occupancy. Other City departments may require inspections prior to the granting of a Certificate of Occupancy. Issuance of a Certificate of Occupancy shall not be construed as an approval of a violation of the provisions of this code or of other ordinances of the jurisdiction.

An applicant for a Sexually Oriented Business as required by the Sexually Oriented Business Chapter of the City Code must first obtain a Certificate of Occupancy for a Sexually Oriented Business from the Building Official. The Building Official shall issue or deny a Certificate of Occupancy to a Sexually Oriented Business not more than sixty (60) business days subsequent to the date of the applicant's submission of such application to the Building Official. Such application for a Certificate of Occupancy shall be deemed approved if not approved or denied within such time period.

The Certificate of Occupancy shall contain:

1. The address of the building;

2. The name of the business located at said premises, building or structure;

3. The allowable zoning use for which the certificate is issued;

4. The zoning district in which the use is located; and

5. Any conditions of the granting of the certificate.

Further, Article IV, **Section 4.14**, **Subsection (F)**, is hereby amended so that hereafter said subsection shall read as follows:

F. Revocation. The Building Official may, in writing, suspend or revoke a Certificate of Occupancy or a temporary Certificate of Occupancy issued under the provisions of this Code whenever the certificate is issued in error, or on the basis of incorrect information supplied, or when it is determined that the building or structure or portion thereof is in violation of any ordinance or regulation or any provision of this Code or other provisions of law. Upon suspension or revocation of a Certificate of Occupancy, the Building Official shall have the authority to disconnect, or to order the electricity supply agency to disconnect, all electric service to any premises affected by the revoked or suspended Certificate of Occupancy.

Further, **Article VI**, Prefabricated or Modular Buildings, is hereby amended so that hereafter the title and Article shall read as follows:

ARTICLE VI

MANUFACTURED HOUSING AND INDUSTRIALIZED HOUSING AND BUILDINGS

Section 6.01 Definitions. The following terms shall have the meanings as set forth in this section:

"Building Official" shall mean the legally designated inspection authority of the City or his/her authorized representative.

"City" shall mean City of Arlington, Tarrant County, Texas.

"HUD-code manufactured home" shall mean a structure constructed on or after June 15, 1976, according to the rules of the United States Department of Housing and Urban Development; built on a permanent chassis; designed for use as a dwelling with or without a permanent foundation when the structure is connected to the required utilities; transportable in one or more sections; and in the traveling mode, at least eight body feet in width or at least 40 body feet in length or, when erected on site, at least 320 square feet.

HUD-code manufactured home includes the plumbing, heating, air conditioning, and electrical systems of the home.

HUD-code manufactured home does not include a recreational vehicle as defined by 24 C.F.R. Section 3282.8(g).

"Industrialized Housing" shall mean a residential structure that is designed for the occupancy of one or more families; constructed in one or more modules or constructed using one or more modular components built at a location other than the permanent site; and designed to be used as a permanent residential structure when the module or the modular component is transported to the permanent site and erected or installed on a permanent foundation system.

Industrialized housing includes the structure's plumbing, heating, air conditioning, and electrical systems.

Industrialized housing does not include a residential structure that exceeds three stories or 49 feet in height; housing constructed of a sectional or panelized system that does not use a modular component; or a ready-built home constructed in a manner in which the entire living area is contained in a single unit or section at a temporary location for the purpose of selling and moving the home to another location.

"Industrialized Building" shall mean a commercial structure that is constructed in one or more modules or constructed using one or more modular components built at a location other than the commercial site; and designed to be used as a commercial building when the module or the modular component is transported to the commercial site and erected or installed.

An industrialized building includes the structure's plumbing, heating, air conditioning, and electrical systems.

An industrialized building includes a permanent commercial structure and a commercial structure designed to be transported from one commercial site to another commercial site but does not include a commercial structure that exceeds three stories or 49 feet in height; or a commercial building or structure that is installed in a manner other than on a permanent foundation; and either not open to the public; or less than 1,500 square feet in total area and used other than as a school or a place of religious worship.

"**Manufactured home**" or "**manufactured housing**" shall mean a HUD-code manufactured home or a mobile home.

"**Mobile home**" shall mean a structure constructed before June 15, 1976; built on a permanent chassis; designed for use as a dwelling with or without a permanent foundation when the structure is connected to the required utilities; transportable in one or more sections; and in the traveling mode, at least eight body feet in width or at least 40 body feet in length or, when erected on site, at least 320 square feet.

Mobile home includes the plumbing, heating, air conditioning, and electrical systems of the home.

Section 6.02 <u>Permits for Industrialized Housing and Buildings</u>

To erect or install industrialized housing or industrialized building and before any construction may commence a building permit must first be issued in accordance with the provisions of Article IV of this chapter. In addition to the permit requirements of Article IV, the building permit application must include:

1. Two (2) complete sets of designs, plans, and specifications bearing the Texas Industrialized Building Code Council's stamp of approval for each installation of industrialized housing or building.

2. Plans that demonstrate that the industrialized building or industrialized housing be securely fixed to a permanent foundation.

3. Permit applications for single family or duplex Industrialized Housing must include:

    a. Documentation verifying that industrialized housing must have a value equal to or greater than the median taxable value for each single-family dwelling located within 500 feet of the lot on which the industrialized housing is proposed to be located, as determined by the most recent certified tax appraisal roll for Tarrant county;

    b. Plans that demonstrate the exterior siding, roofing, roofing pitch, foundation fascia, and fenestration is compatible with the single-family dwellings located within 500 feet of the lot on which the industrialized housing is proposed to be located;

    c. Plans that demonstrate compliance with the residential design standards, building setbacks, side and rear yard offsets, architectural landscaping, square footage, and other zoning and site requirements applicable to one- and two-family dwellings; and

    d. For purposes of subsection "a" above, "value" means the taxable value of the industrialized housing and the lot after installation of the housing.

4. The installation of an industrialized building or industrialized housing must demonstrate compliance with the all land use and zoning requirements, commercial design standards, building setback requirements, side and rear yard requirements, and all elements of *Commercial Site Plan* as set forth in Article IV of this chapter.

5. Each industrialized modular section or modular component must bear a decal or insignia as approved by the Texas Industrialized Building Code Council.

Section 6.03 <u>Permits for Manufactured Housing, HUD Code Manufactured Homes and Mobile Homes</u>

A. The installation of a mobile home for use as a dwelling is prohibited. The prohibition is prospective and does not apply to a mobile home previously legally permitted by and used as a dwelling in the City.

B. Where a manufactured home occupies a lot, the owner of the manufactured home may remove the manufactured home from its location and place another manufactured home on the same property. The replacement manufactured home must be a newer manufactured home and must be at least as large in living space as the prior manufactured home. This replacement is limited to a one time replacement. Not more than twelve months shall lapse between the time of the removal and the time of replacement. It shall be the owner's responsibility to prove the removal date and the age and size of the removed manufactured home.

C. An owner shall be allowed to replace a manufactured home that has been destroyed as a result of a fire or natural disaster. Not more than twelve months shall lapse between the time of the removal and the replacement. It shall be the owner's responsibility to prove the date of the fire or natural disaster that destroyed the manufactured home.

D. An owner shall be granted permission to replace a mobile home by a HUD-code manufactured home. This replacement is limited to a one time replacement. Not more than twelve months shall lapse between the time of the removal and the time of replacement. It shall be the owner's responsibility to prove the removal date and the age of the removed mobile home.

E. To install, replace, place or set up, any manufactured housing and before any related site construction may commence a "Manufactured Home Site Placement Review" must first be issued in accordance with the permitting provisions of Article IV of this chapter. A "Manufactured Home Site Placement Permit" application to replace or place manufactured housing for use as a dwelling shall be considered to be granted unless the application is denied in writing accompanied by the reasons for the denial not later than the 45th day after the completed application is received.

An application for "Manufactured Home Site Placement Permit" to place manufactured housing on any site is subject to the following:

1. The scope of the "Manufactured Home Site Placement Permit" shall include:

    a. General site preparation work for other than the localized site and foundation preparation for the manufactured housing unit,

b. Site electrical work and connection to the manufactured housing unit,

c. Installation of air conditioning equipment at the site and connection to the manufactured housing unit,

d. The connection to water and sewer services at the site and connection to the manufactured housing unit,

e. The installation of skirting around and connection to the manufactured housing unit if that cost is excluded from the installers cost.

f. The setbacks from property lines,

g. The surface improvement of the drive approaches and internal driveways,

h. The setback from any future rights of way based on the thoroughfare development plan,

i. The location of the manufactured housing in regard to easements, and

j. The location of the manufactured in regard to flood plain hazards.

2. The scope of the "Manufactured Home Site Placement Permit" shall not include the installation of the manufactured housing unit which includes the immediate site preparation of the manufactured housing unit(s), the foundation system, the joining/connection of the manufactured housing units, placement of the manufactured home on the foundation, and the installation of steps or legally compliant ramps to any exterior door that will be 12 inches or more above ground level.

3. The transporting and installation of the manufactured housing unit(s) must be performed by a retailer or installer that is licensed by the Texas Department of Housing & Community Affairs, Manufacture Housing Division.

4. The "Manufactured Home Site Placement Permit" may only be issued to a retailer or installer that is licensed by the Texas Department of Housing & Community Affairs, Manufacture Housing Division.

5. Upon application for the "Manufactured Home Site Placement Permit" the owner must pay a fee as established by resolution of the City Council.

6. The placement or replacement of the manufactured home is subject to inspections as required by the building official.

Section 6.04 Electronic documents required

Final plans or other documents that will be archived must be submitted in an electronic format specified by the Director of Community Development and Planning ("CDP Director") as a condition to issuance of any type of permit, approval, or other action related to the final plans or documents. The City may provide an electronic conversion service for a fee in the amount set forth by City Council resolution. The CDP Director shall provide a schedule indicating which documents must be provided electronically, at which point during the approval process, and other information as necessary to implement an electronic archiving program.

Further, **Article XVI**, Dangerous Buildings, **Section 16.11**, Other Enforcement, Subsection (A), is hereby amended so that hereafter said subsection shall read as follows:

A. It is a violation for any person, firm or corporation to own, lease, use, occupy or maintain a dangerous building as defined in this Article, or to cause or permit the same to be done, in the City of Arlington. A violator shall be guilty of a misdemeanor punishable by a fine not to exceed Two Thousand Dollars and No Cents ($2,000) for each violation pursuant to the penalties provisions of this Chapter.

Further, **Article XVI**, **Section 16.11**, is hereby amended by the **deletion** of **Subsection (E)**.

Further, **Article XVI**, **Section 16.13**, Requiring Repair, Removal, or Demolition of Structure, Subsection (B)(7)(f), is hereby amended so that hereafter said subsection shall read as follows:

f. The Administrator may schedule on the City Council agenda the proposed order for final resolution by City Council no later than 30 days from the date of the proposed order. The Administrator shall issue notice to each owner of the structure, owner of the property on which the structure is located, mortgagee, and lienholder of the City Council agenda date, time and place for final resolution pursuant to the issuance, contents and service of notice for the Hearing Authority's hearing in this Chapter.

Further, **Article XVI**, **Section 16.13**, Subsection (C), is hereby amended so that hereafter said **title** and subsection shall read as follows:

C. City Council Resolution or Final Order

1. City Council may adopt, in whole or part, by City Council Resolution, the Hearing Authority's Proposed Order as its finding and order and the proposed order will become the final order.

2. City Council may amend, modify or reject the Hearing Authority's proposed order. If City Council amends, modifies or rejects the Hearing Authority's proposed order, the City Council, by City Council Resolution, shall issue its finding and order as the final order. City Council's finding and order shall be issued in accordance with the Hearing Authority's procedures for Findings and Decisions set forth in this Chapter.

3. If the Administrator does not schedule the proposed order on the City Council agenda after the expiration of 30 days from the proposed order, then the proposed order becomes the final order.

4. A copy of the City Council Resolution or final order shall be sent promptly by the Administrator by certified mail, return receipt requested, to the owner of the structure, owner of the property on which the structure is located, mortgagee, and lienholder. If such City Council Resolution or final order is mailed according to this subsection and the United States Postal Service returns the order as "refused" or "unclaimed", the validity of notice of the City Council Resolution or final order is not affected, and the order shall be deemed as delivered.

5. Within ten (10) days after the date of passage of the City Council Resolution or effective date of the final order:

   a. a copy of the City Council Resolution or final order containing its finding and order regarding the structure shall be filed in the Office of the City Secretary; and

   b. a notice shall be published in a newspaper of general circulation in the City, said notice containing:

      (1) the street address or legal description of the property;

      (2) the date of consideration of the City Council Resolution or effective date of the final order;

      (3) a brief statement indicating the results of the City Council Resolution; and

(4) instructions stating where a complete copy of the City Council Resolution or final order may be obtained.

(5) If the owner of the structure or the owner of the property on which the structure is located fails to comply with an order in the City Council Resolution or final order within the allotted time, the Administrator shall cause a copy of the City Council Resolution or final order to be sent by certified mail return receipt requested to each lienholder and mortgagee as was determined pursuant to this Chapter. This shall constitute notice to the lienholders and mortgagees that the owner has failed to comply with the order.

6. When any work to repair, remove, or demolish is done by the City pursuant to this Chapter, the Administrator shall cause the work to be accomplished by City personnel or by private contract under the direction of the Administrator, or he may employ such architectural, engineering, or other specialized assistance on a contract basis as reasonably necessary.

7. Any expenses for work to repair, remove or demolish shall be assessed pursuant to Article XVIII of the Construction Chapter except as to the following:

The Administrator shall also provide notice of the assessment to the owner of the structure and the owner of the property on which the structure was located by mailing by certified mail, postage prepaid a copy of the Hearing Authority's order assessing cost.

2.

Any person, firm, corporation, agent or employee thereof who violates any of the provisions of this ordinance shall be guilty of a misdemeanor and upon conviction thereof shall be fined an amount not to exceed Two Thousand and No/100 Dollars ($2,000) for each offense. Each day that a violation is permitted to exist shall constitute a separate offense.

3.

This ordinance shall be and is hereby declared to be cumulative of all other ordinances of the City of Arlington; and this ordinance shall not operate to repeal or affect any of such other ordinances except insofar as the provisions thereof might be inconsistent or in conflict with the provisions of this ordinance, in which event such conflicting provisions, if any, in such other ordinance or ordinances are hereby repealed.

4.

If any section, subsection, sentence, clause or phrase of this ordinance is for any reason held to be unconstitutional, such holding shall not affect the validity of the remaining portions of this ordinance.

5.

All of the regulations provided in this ordinance are hereby declared to be governmental and for the health, safety and welfare of the general public. Any member of the City Council or any City official or employee charged with the enforcement of this ordinance, acting for the City of Arlington in the discharge of his/her duties, shall not thereby render himself/herself personally liable; and he/she is hereby relieved from all personal liability for any damage that might accrue to persons or property as a result of any act required or permitted in the discharge of his/her said duties.

6.

Any violation of this ordinance can be enjoined by a suit filed in the name of the City of Arlington in a court of competent jurisdiction, and this remedy shall be in addition to any penal provision in this ordinance or in the Code of the City of Arlington.

7.

The caption and penalty clause of this ordinance shall be published in a newspaper of general circulation in the City of Arlington, Texas, in compliance with the provisions of Article VII, Section 15, of the City Charter. Further, this ordinance may be published in pamphlet form and shall be admissible in such form in any court, as provided by law.

8.

This ordinance shall become effective May 24, 2012, which is 30 days after the final adoption of the ordinance at the second reading on April 24, 2012.

PRESENTED AND GIVEN FIRST READING on the 3rd day of April, 2012, at a regular meeting of the City Council of the City of Arlington, Texas; and GIVEN SECOND READING, passed and approved on the 24th day of April, 2012, by a vote of 7 ayes and 0 nays at a regular meeting of the City Council of the City of Arlington, Texas.

ROBERT N. CLUCK, Mayor

ATTEST:

Mary W. Supino

MARY W. SUPINO, City Secretary

APPROVED AS TO FORM:
JAY DOEGEY, City Attorney

BY Mack Reinwand

Ordinance No. 13-036

An ordinance amending the "Construction" Chapter of the Code of the City of Arlington, Texas, 1987, through the amendment of Article I, Building Code, Section 1.04, Amendments, Additions and Deletions, Subsection (C), by the addition of Subsection (85.1); and Subsection (D), by the addition of Subsection (19.1), relative to grading values of Southern Pine lumber; providing for a fine of up to $2,000 for each offense in violation of the ordinance; providing this ordinance be cumulative; providing for severability, governmental immunity, injunctions, and publication; and becoming effective on September 20, 2013

BE IT ORDAINED BY THE CITY COUNCIL OF THE CITY OF ARLINGTON, TEXAS:

1.

That the "**Construction**" Chapter of the Code of the City of Arlington, Texas, 1987, is hereby amended through the amendment of Article I, Building Code, **Section 1.04**, Amendments, Additions and Deletions, **Subsection (C)**, by the addition of Subsection (85.1), so that hereafter said Subsection shall read as follows:

85.1. The amendment of Tables 2308.8(1), 2308.8(2), 2308.9.5, 2308.9.6, 2308.10.2(1), 2308.10.2(2), 2308.10.3(1), 2308.10.3(2), 2308.10.3(3), and 2308.10.3(5), so that each Table shall read as follows:

TABLE 2308.8(1)
FLOOR JOIST SPANS FOR COMMON LUMBER SPECIES
(Residential Sleeping Areas, Live Load = 30 psf, L/Δ = 360)

JOIST SPACING (inches)	SPECIES AND GRADE		DEAD LOAD = 10 psf				DEAD LOAD = 20 psf			
			2x6	2x8	2x10	2x12	2x6	2x8	2x10	2x12
			Maximum floor joist spans							
			(ft. - in.)	(ft. - in.)	(ft. - in.)	(ft. - in.)	(ft. - in.)	(ft. - in.)	(ft. - in.)	(ft. - in.)
12	Douglas Fir-Larch	SS	12-6	16-6	21-0	25-7	12-6	16-6	21-0	25-7
	Douglas Fir-Larch	#1	12-0	15-10	20-3	24-8	12-0	15-7	19-0	22-0
	Douglas Fir-Larch	#2	11-10	15-7	19-10	23-0	11-6	14-7	17-9	20-7
	Douglas Fir-Larch	#3	9-8	12-4	15-0	17-5	8-8	11-0	13-5	15-7
	Hem-Fir	SS	11-10	15-7	19-10	24-2	11-10	15-7	19-10	24-2
	Hem-Fir	#1	11-7	15-3	19-5	23-7	11-7	15-2	18-6	21-6
	Hem-Fir	#2	11-0	14-6	18-6	22-6	11-0	14-4	17-6	20-4
	Hem-Fir	#3	9-8	12-4	15-0	17-5	8-8	11-0	13-5	15-7
	Southern Pine	SS	12-3	16-2	20-8	25-1	12-3	16-2	20-8	25-1
	Southern Pine	#1	11-10	15-7	19-10	24-2	11-10	15-7	18-7	22-0
	Southern Pine	#2	11-3	14-11	18-1	21-4	10-9	13-8	16-2	19-1
	Southern Pine	#3	9-2	11-6	14-0	16-6	8-2	10-3	12-6	14-9
	Spruce-Pine-Fir	SS	11-7	15-3	19-5	23-7	11-7	15-3	19-5	23-7
	Spruce-Pine-Fir	#1	11-3	14-11	19-0	23-0	11-3	14-7	17-9	20-7
	Spruce-Pine-Fir	#2	11-3	14-11	19-0	23-0	11-3	14-7	17-9	20-7
	Spruce-Pine-Fir	#3	9-8	12-4	15-0	17-5	8-8	11-0	13-5	15-7
16	Douglas Fir-Larch	SS	11-4	15-0	19-1	23-3	11-4	15-0	19-1	23-0
	Douglas Fir-Larch	#1	10-11	14-5	18-5	21-4	10-8	13-6	16-5	19-1
	Douglas Fir-Larch	#2	10-9	14-1	17-2	19-11	9-11	12-7	15-5	17-10
	Douglas Fir-Larch	#3	8-5	10-8	13-0	15-1	7-6	9-6	11-8	13-6
	Hem-Fir	SS	10-9	14-2	18-0	21-11	10-9	14-2	18-0	21-11
	Hem-Fir	#1	10-6	13-10	17-8	20-9	10-4	13-1	16-0	18-7
	Hem-Fir	#2	10-0	13-2	16-10	19-8	9-10	12-5	15-2	17-7
	Hem-Fir	#3	8-5	10-8	13-0	15-1	7-6	9-6	11-8	13-6
	Southern Pine	SS	11-2	14-8	18-9	22-10	11-2	14-8	18-9	22-10
	Southern Pine	#1	10-9	14-2	18-0	21-4	10-9	13-9	16-1	19-1
	Southern Pine	#2	10-3	13-3	15-8	18-6	9-4	11-10	14-0	16-6
	Southern Pine	#3	7-11	10-10	12-1	14-4	7-1	8-11	10-10	12-10
	Spruce-Pine-Fir	SS	10-6	13-10	17-8	21-6	10-6	13-10	17-8	21-4
	Spruce-Pine-Fir	#1	10-3	13-6	17-2	19-11	9-11	12-7	15-5	17-10
	Spruce-Pine-Fir	#2	10-3	13-6	17-2	19-11	9-11	12-7	15-5	17-10
	Spruce-Pine-Fir	#3	8-5	10-8	13-0	15-1	7-6	9-6	11-8	13-6
19.2	Douglas Fir-Larch	SS	10-8	14-1	18-0	21-10	10-8	14-1	18-0	21-0
	Douglas Fir-Larch	#1	10-4	13-7	16-9	19-6	9-8	12-4	15-0	17-5
	Douglas Fir-Larch	#2	10-1	12-10	15-8	18-3	9-1	11-6	14-1	16-3
	Douglas Fir-Larch	#3	7-8	9-9	11-10	13-9	6-10	8-8	10-7	12-4
	Hem-Fir	SS	10-1	13-4	17-0	20-8	10-1	13-4	17-0	20-7
	Hem-Fir	#1	9-10	13-0	16-4	19-0	9-6	12-0	14-8	17-0
	Hem-Fir	#2	9-5	12-5	15-6	17-1	8-11	11-4	13-10	16-1
	Hem-Fir	#3	7-8	9-9	11-10	13-9	6-10	8-8	10-7	12-4

(continued)

TABLE 2308.8(1)—continued
FLOOR JOIST SPANS FOR COMMON LUMBER SPECIES
(Residential Sleeping Areas, Live Load = 30 psf, L/Δ = 360)

JOIST SPACING (inches)	SPECIES AND GRADE		DEAD LOAD = 10 psf				DEAD LOAD = 20 psf			
			2x6	2x8	2x10	2x12	2x6	2x8	2x10	2x12
			Maximum floor joist spans							
			(ft. - in.)	(ft. - in.)	(ft. - in.)	(ft. - in.)	(ft. - in.)	(ft. - in.)	(ft. - in.)	(ft. - in.)
19.2	Southern Pine	SS	10-6	13-10	17-8	21-6	10-6	13-10	17-8	21-6
	Southern Pine	#1	10-1	13-4	16-5	19-6	9-11	12-7	14-8	17-5
	Southern Pine	#2	9-6	12-1	14-4	16-10	8-6	10-10	12-10	15-1
	Southern Pine	#3	7-3	9-1	11-0	13-1	6-5	8-2	9-10	11-8
	Spruce-Pine-Fir	SS	9-10	13-0	16-7	20-2	9-10	13-0	16-7	19-6
	Spruce-Pine-Fir	#1	9-8	12-9	15-8	18-3	9-1	11-6	14-1	16-3
	Spruce-Pine-Fir	#2	9-8	12-9	15-8	18-3	9-1	11-6	14-1	16-3
	Spruce-Pine-Fir	#3	7-8	9-9	11-10	13-9	6-10	8-8	10-7	12-4
24	Douglas Fir-Larch	SS	9-11	13-1	16-8	20-3	9-11	13-1	16-2	18-9
	Douglas Fir-Larch	#1	9-7	12-4	15-0	17-5	8-8	11-0	13-5	15-7
	Douglas Fir-Larch	#2	9-1	11-6	14-1	16-3	8-1	10-3	12-7	14-7
	Douglas Fir-Larch	#3	6-10	8-8	10-7	12-4	6-2	7-9	9-6	11-0
	Hem-Fir	SS	9-4	12-4	15-9	19-2	9-4	12-4	15-9	18-5
	Hem-Fir	#1	9-2	12-0	14-8	17-0	8-6	10-9	13-1	15-2
	Hem-Fir	#2	8-9	11-4	13-10	16-1	8-0	10-2	12-5	14-4
	Hem-Fir	#3	6-10	8-8	10-7	12-4	6-2	7-9	9-6	11-0
	Southern Pine	SS	9-9	12-10	16-5	19-11	9-9	12-10	16-5	19-8
	Southern Pine	#1	9-4	12-4	14-8	17-5	8-10	11-3	13-1	15-7
	Southern Pine	#2	8-6	10-10	12-10	15-1	7-7	9-8	11-5	13-6
	Southern Pine	#3	6-5	8-2	9-10	11-8	5-9	7-3	8-10	10-5
	Spruce-Pine-Fir	SS	9-2	12-1	15-5	18-9	9-2	12-1	15-0	17-5
	Spruce-Pine-Fir	#1	8-11	11-6	14-1	16-3	8-1	10-3	12-7	14-7
	Spruce-Pine-Fir	#2	8-11	11-6	14-1	16-3	8-1	10-3	12-7	14-7
	Spruce-Pine-Fir	#3	6-10	8-8	10-7	12-4	6-2	7-9	9-6	11-0

For SI: 1 inch = 25.4 mm, 1 foot = 304.8 mm, 1 pound per square foot = 47.8 N/m^2.

TABLE 2308.8(2)
FLOOR JOIST SPANS FOR COMMON LUMBER SPECIES
(Residential Living Areas, Live Load = 40 psf, L/Δ = 360)

JOIST SPACING (inches)	SPECIES AND GRADE		DEAD LOAD = 10 psf				DEAD LOAD = 20 psf			
			2x6	2x8	2x10	2x12	2x6	2x8	2x10	2x12
			Maximum floor joist spans							
			(ft. - in.)	(ft. - in.)	(ft. - in.)	(ft. - in.)	(ft. - in.)	(ft. - in.)	(ft. - in.)	(ft. - in.)
12	Douglas Fir-Larch	SS	11-4	15-0	19-1	23-3	11-4	15-0	19-1	23-3
	Douglas Fir-Larch	#1	10-11	14-5	18-5	22-0	10-11	14-2	17-4	20-1
	Douglas Fir-Larch	#2	10-9	14-2	17-9	20-7	10-6	13-3	16-3	18-10
	Douglas Fir-Larch	#3	8-8	11-0	13-5	15-7	7-11	10-0	12-3	14-3
	Hem-Fir	SS	10-9	14-2	18-0	21-11	10-9	14-2	18-0	21-11
	Hem-Fir	#1	10-6	13-10	17-8	21-6	10-6	13-10	16-11	19-7
	Hem-Fir	#2	10-0	13-2	16-10	20-4	10-0	13-1	16-0	18-6
	Hem-Fir	#3	8-8	11-0	13-5	15-7	7-11	10-0	12-3	14-3
	Southern Pine	SS	11-2	14-8	18-9	22-10	11-2	14-8	18-9	22-10
	Southern Pine	#1	10-9	14-2	18-0	21-11	10-9	14-2	16-11	20-1
	Southern Pine	#2	10-3	13-6	16-2	19-1	9-10	12-6	14-9	17-5
	Southern Pine	#3	8-2	10-3	12-6	14-9	7-5	9-5	11-5	13-6
	Spruce-Pine-Fir	SS	10-6	13-10	17-8	21-6	10-6	13-10	17-8	21-6
	Spruce-Pine-Fir	#1	10-3	13-6	17-3	20-7	10-3	13-3	16-3	18-10
	Spruce-Pine-Fir	#2	10-3	13-6	17-3	20-7	10-3	13-3	16-3	18-10
	Spruce-Pine-Fir	#3	8-8	11-0	13-5	15-7	7-11	10-0	12-3	14-3
16	Douglas Fir-Larch	SS	10-4	13-7	17-4	21-1	10-4	13-7	17-4	21-0
	Douglas Fir-Larch	#1	9-11	13-1	16-5	19-1	9-8	12-4	15-0	17-5
	Douglas Fir-Larch	#2	9-9	12-7	15-5	17-10	9-1	11-6	14-1	16-3
	Douglas Fir-Larch	#3	7-6	9-6	11-8	13-6	6-10	8-8	10-7	12-4
	Hem-Fir	SS	9-9	12-10	16-5	19-11	9-9	12-10	16-5	19-11
	Hem-Fir	#1	9-6	12-7	16-0	18-7	9-6	12-0	14-8	17-0
	Hem-Fir	#2	9-1	12-0	15-2	17-7	8-11	11-4	13-10	16-1
	Hem-Fir	#3	7-6	9-6	11-8	13-6	6-10	8-8	10-7	12-4
	Southern Pine	SS	10-2	13-4	17-0	20-9	10-2	13-4	17-0	20-9
	Southern Pine	#1	9-9	12-10	16-1	19-1	9-9	12-7	14-8	17-5
	Southern Pine	#2	9-4	11-10	14-0	16-6	8-6	10-10	12-10	15-1
	Southern Pine	#3	7-1	8-11	10-10	12-10	6-5	8-2	9-10	11-8
	Spruce-Pine-Fir	SS	9-6	12-7	16-0	19-6	9-6	12-7	16-0	19-6
	Spruce-Pine-Fir	#1	9-4	12-3	15-5	17-10	9-1	11-6	14-1	16-3
	Spruce-Pine-Fir	#2	9-4	12-3	15-5	17-10	9-1	11-6	14-1	16-3
	Spruce-Pine-Fir	#3	7-6	9-6	11-8	13-6	6-10	8-8	10-7	12-4
19.2	Douglas Fir-Larch	SS	9-8	12-10	16-4	19-10	9-8	12-10	16-4	19-2
	Douglas Fir-Larch	#1	9-4	12-4	15-0	17-5	8-10	11-3	13-8	15-11
	Douglas Fir-Larch	#2	9-1	11-6	14-1	16-3	8-3	10-6	12-10	14-10
	Douglas Fir-Larch	#3	6-10	8-8	10-7	12-4	6-3	7-11	9-8	11-3
	Hem-Fir	SS	9-2	12-1	15-5	18-9	9-2	12-1	15-5	18-9
	Hem-Fir	#1	9-0	11-10	14-8	17-0	8-8	10-11	13-4	15-6
	Hem-Fir	#2	8-7	11-3	13-10	16-1	8-2	10-4	12-8	14-8
	Hem-Fir	#3	6-10	8-8	10-7	12-4	6-3	7-11	9-8	11-3
	Southern Pine	SS	9-6	12-7	16-0	19-6	9-6	12-7	16-0	19-6
	Southern Pine	#1	9-2	12-1	14-8	17-5	9-0	11-5	13-5	15-11
	Southern Pine	#2	8-6	10-10	12-10	15-1	7-9	9-10	11-8	13-9
	Southern Pine	#3	6-5	8-2	9-10	11-8	5-11	7-5	9-0	10-8
	Spruce-Pine-Fir	SS	9-0	11-10	15-1	18-4	9-0	11-10	15-1	17-9
	Spruce-Pine-Fir	#1	8-9	11-6	14-1	16-3	8-3	10-6	12-10	14-10
	Spruce-Pine-Fir	#2	8-9	11-6	14-1	16-3	8-3	10-6	12-10	14-10
	Spruce-Pine-Fir	#3	6-10	8-8	10-7	12-4	6-3	7-11	9-8	11-3

(continued)

TABLE 2308.8(2)—continued
FLOOR JOIST SPANS FOR COMMON LUMBER SPECIES
(Residential Living Areas, Live Load = 40 psf, L/Δ = 360)

JOIST SPACING (inches)	SPECIES AND GRADE		DEAD LOAD = 10 psf				DEAD LOAD = 20 psf			
			2x6	2x8	2x10	2x12	2x6	2x8	2x10	2x12
			Maximum floor joist spans							
			(ft. - in.)	(ft. - in.)	(ft. - in.)	(ft. - in.)	(ft. - in.)	(ft. - in.)	(ft. - in.)	(ft. - in.)
24	Douglas Fir-Larch	SS	9-0	11-11	15-2	18-5	9-0	11-11	14-9	17-1
	Douglas Fir-Larch	#1	8-8	11-0	13-5	15-7	7-11	10-0	12-3	14-3
	Douglas Fir-Larch	#2	8-1	10-3	12-7	14-7	7-5	9-5	11-6	13-4
	Douglas Fir-Larch	#3	6-2	7-9	9-6	11-0	5-7	7-1	8-8	10-1
	Hem-Fir	SS	8-6	11-3	14-4	17-5	8-6	11-3	14-4	16-10[a]
	Hem-Fir	#1	8-4	10-9	13-1	15-2	7-9	9-9	11-11	13-10
	Hem-Fir	#2	7-11	10-2	12-5	14-4	7-4	9-3	11-4	13-1
	Hem-Fir	#3	6-2	7-9	9-6	11-0	5-7	7-1	8-8	10-1
	Southern Pine	SS	8-10	11-8	14-11	18-1	8-10	11-8	14-11	18-0
	Southern Pine	#1	8-6	11-3	13-1	15-7	8-1	10-3	12-0	14-3
	Southern Pine	#2	7-7	9-8	11-5	13-6	7-0	8-10	10-5	12-4
	Southern Pine	#3	5-9	7-3	8-10	10-5	5-3	6-8	8-1	9-6
	Spruce-Pine-Fir	SS	8-4	11-0	14-0	17-0	8-4	11-0	13-8	15-11
	Spruce-Pine-Fir	#1	8-1	10-3	12-7	14-7	7-5	9-5	11-6	13-4
	Spruce-Pine-Fir	#2	8-1	10-3	12-7	14-7	7-5	9-5	11-6	13-4
	Spruce-Pine-Fir	#3	6-2	7-9	9-6	11-0	5-7	7-1	8-8	10-1

For SI: 1 inch = 25.4 mm, 1 foot = 304.8 mm, 1 pound per square foot = 47.8 N/m^2.

a. End bearing length shall be increased to 2 inches.

TABLE 2308.9.5
HEADER AND GIRDER SPANS[a,b] FOR EXTERIOR BEARING WALLS
(Maximum Spans for Douglas Fir-Larch, Hem-Fir, Southern Pine and Spruce-Pine-Fir and Required Number of Jack Studs)

HEADERS SUPPORTING	SIZE	GROUND SNOW LOAD (psf)[e]											
		30						50					
		Building width[c] (feet)											
		20		28		36		20		28		36	
		Span	NJ[d]	Span	NJ[d]	Span	NJ[d]	Span	NJ[d]	Span	NJ[d]	Span	NJ[d]
Roof & Ceiling	2-2x4	3-6	1	3-2	1	2-10	1	3-2	1	2-9	1	2-6	1
	2-2x6	5-5	1	4-8	1	4-2	1	4-8	1	4-1	1	3-8	2
	2-2x8	6-10	1	5-11	2	5-4	2	5-11	2	5-2	2	4-7	2
	2-2x10	8-5	2	7-3	2	6-6	2	7-3	2	6-3	2	5-7	2
	2-2x12	9-9	2	8-5	2	7-6	2	8-5	2	7-3	2	6-6	2
	3-2x8	8-4	1	7-5	1	6-8	1	7-5	1	6-5	2	5-9	2
	3-2x10	10-6	1	9-1	2	8-2	2	9-1	2	7-10	2	7-0	2
	3-2x12	12-2	2	10-7	2	9-5	2	10-7	2	9-2	2	8-2	2
	4-2x8	9-2	1	8-4	1	7-8	1	8-4	1	7-5	1	6-8	1
	4-2x10	11-8	1	10-6	1	9-5	2	10-6	1	9-1	2	8-2	2
	4-2x12	14-1	1	12-2	2	10-11	2	12-2	2	10-7	2	9-5	2
Roof, Ceiling & 1 Center-Bearing Floor	2-2x4	3-1	1	2-9	1	2-5	1	2-9	1	2-5	1	2-2	1
	2-2x6	4-6	1	4-0	1	3-7	2	4-1	1	3-7	2	3-3	2
	2-2x8	5-9	2	5-0	2	4-6	2	5-2	2	4-6	2	4-1	2
	2-2x10	7-0	2	6-2	2	5-6	2	6-4	2	5-6	2	5-0	2
	2-2x12	8-1	2	7-1	2	6-5	2	7-4	2	6-5	2	5-9	3
	3-2x8	7-2	1	6-3	2	5-8	2	6-5	2	5-8	2	5-1	2
	3-2x10	8-9	2	7-8	2	6-11	2	7-11	2	6-11	2	6-3	2
	3-2x12	10-2	2	8-11	2	8-0	2	9-2	2	8-0	2	7-3	2
	4-2x8	8-1	1	7-3	1	6-7	1	7-5	1	6-6	1	5-11	2
	4-2x10	10-1	1	8-10	2	8-0	2	9-1	2	8-0	2	7-2	2
	4-2x12	11-9	2	10-3	2	9-3	2	10-7	2	9-3	2	8-4	2
Roof, Ceiling & 1 Clear Span Floor	2-2x4	2-8	1	2-4	1	2-1	1	2-7	1	2-3	1	2-0	1
	2-2x6	3-11	1	3-5	2	3-0	2	3-10	2	3-4	2	3-0	2
	2-2x8	5-0	2	4-4	2	3-10	2	4-10	2	4-2	2	3-9	2
	2-2x10	6-1	2	5-3	2	4-8	2	5-11	2	5-1	2	4-7	3
	2-2x12	7-1	2	6-1	3	5-5	3	6-10	2	5-11	3	5-4	3
	3-2x8	6-3	2	5-5	2	4-10	2	6-1	2	5-3	2	4-8	2
	3-2x10	7-7	2	6-7	2	5-11	2	7-5	2	6-5	2	5-9	2
	3-2x12	8-10	2	7-8	2	6-10	2	8-7	2	7-5	2	6-8	2
	4-2x8	7-2	1	6-3	2	5-7	2	7-0	1	6-1	2	5-5	2
	4-2x10	8-9	2	7-7	2	6-10	2	8-7	2	7-5	2	6-7	2
	4-2x12	10-2	2	8-10	2	7-11	2	9-11	2	8-7	2	7-8	2

(continued)

TABLE 2308.9.5—continued
HEADER AND GIRDER SPANS[a,b] FOR EXTERIOR BEARING WALLS
(Maximum Spans for Douglas Fir-Larch, Hem-Fir, Southern Pine and Spruce-Pine-Fir and Required Number of Jack Studs)

HEADERS SUPPORTING	SIZE	GROUND SNOW LOAD (psf)[e]											
		30						50					
		Building width[c] (feet)											
		20		28		36		20		28		36	
		Span	NJ[d]	Span	NJ[d]	Span	NJ[d]	Span	NJ[d]	Span	NJ[d]	Span	NJ[d]
Roof, Ceiling & 2 Center-Bearing Floors	2-2×4	2-7	1	2-3	1	2-0	1	2-6	1	2-2	1	1-11	1
	2-2×6	3-9	2	3-3	2	2-11	2	3-8	2	3-2	2	2-10	2
	2-2×8	4-9	2	4-2	2	3-9	2	4-7	2	4-0	2	3-8	2
	2-2×10	5-9	2	5-1	2	4-7	3	5-8	2	4-11	2	4-5	3
	2-2×12	6-8	2	5-10	3	5-3	3	6-6	2	5-9	3	5-2	3
	3-2×8	5-11	2	5-2	2	4-8	2	5-9	2	5-1	2	4-7	2
	3-2×10	7-3	2	6-4	2	5-8	2	7-1	2	6-2	2	5-7	2
	3-2×12	8-5	2	7-4	2	6-7	2	8-2	2	7-2	2	6-5	3
	4-2×8	6-10	1	6-0	2	5-5	2	6-8	1	5-10	2	5-3	2
	4-2×10	8-4	2	7-4	2	6-7	2	8-2	2	7-2	2	6-5	2
	4-2×12	9-8	2	8-6	2	7-8	2	9-5	2	8-3	2	7-5	2
Roof, Ceiling & 2 Clear Span Floors	2-2×4	2-1	1	1-8	1	1-6	2	2-0	1	1-8	1	1-5	2
	2-2×6	3-1	2	2-8	2	2-4	2	3-0	2	2-7	2	2-3	2
	2-2×8	3-10	2	3-4	2	3-0	3	3-10	2	3-4	2	2-11	3
	2-2×10	4-9	2	4-1	3	3-8	3	4-8	2	4-0	3	3-7	3
	2-2×12	5-6	3	4-9	3	4-3	3	5-5	3	4-8	3	4-2	3
	3-2×8	4-10	2	4-2	2	3-9	2	4-9	2	4-1	2	3-8	2
	3-2×10	5-11	2	5-1	2	4-7	3	5-10	2	5-0	2	4-6	3
	3-2×12	6-10	2	5-11	3	5-4	3	6-9	2	5-10	3	5-3	3
	4-2×8	5-7	2	4-10	2	4-4	2	5-6	2	4-9	2	4-3	2
	4-2×10	6-10	2	5-11	2	5-3	2	6-9	2	5-10	2	5-2	2
	4-2×12	7-11	2	6-10	2	6-2	3	7-9	2	6-9	2	6-0	3

For SI: 1 inch = 25.4 mm, 1 foot = 304.8 mm, 1 pound per square foot = 47.8 N/m^2.

a. Spans are given in feet and inches (ft-in).

b. Spans are based on minimum design properties for No. 2 Grade lumber of Douglas fir-larch, hem-fir, and spruce-pine-fir. No. 1 or better grade lumber shall be used for southern pine.

c. Building width is measured perpendicular to the ridge. For widths between those shown, spans are permitted to be interpolated.

d. NJ - Number of jack studs required to support each end. Where the number of required jack studs equals one, the header is permitted to be supported by an *approved* framing anchor attached to the full-height wall stud and to the header.

e. Use 30 pounds per square foot ground snow load for cases in which ground snow load is less than 30 pounds per square foot and the roof live load is equal to or less than 20 pounds per square foot.

TABLE 2308.9.6
HEADER AND GIRDER SPANS[a,b] FOR INTERIOR BEARING WALLS
(Maximum Spans for Douglas Fir-Larch, Hem-Fir, Southern Pine and Spruce-Pine-Fir and Required Number of Jack Studs)

HEADERS AND GIRDERS SUPPORTING	SIZE	BUILDING width[c] (feet)					
		20		28		36	
		Span	NJ[d]	Span	NJ[d]	Span	NJ[d]
One Floor Only	2-2×4	3-1	1	2-8	1	2-5	1
	2-2×6	4-6	1	3-11	1	3-6	1
	2-2×8	5-9	1	5-0	2	4-5	2
	2-2×10	7-0	2	6-1	2	5-5	2
	2-2×12	8-1	2	7-0	2	6-3	2
	3-2×8	7-2	1	6-3	1	5-7	2
	3-2×10	8-9	1	7-7	2	6-9	2
	3-2×12	10-2	2	8-10	2	7-10	2
	4-2×8	9-0	1	7-8	1	6-9	1
	4-2×10	10-1	1	8-9	1	7-10	2
	4-2×12	11-9	1	10-2	2	9-1	2
Two Floors	2-2×4	2-2	1	1-10	1	1-7	1
	2-2×6	3-2	2	2-9	2	2-5	2
	2-2×8	4-1	2	3-6	2	3-2	2
	2-2×10	4-11	2	4-3	2	3-10	3
	2-2×12	5-9	2	5-0	3	4-5	3
	3-2×8	5-1	2	4-5	2	3-11	2
	3-2×10	6-2	2	5-4	2	4-10	2
	3-2×12	7-2	2	6-3	2	5-7	3
	4-2×8	6-1	1	5-3	2	4-8	2
	4-2×10	7-2	2	6-2	2	5-6	2
	4-2×12	8-4	2	7-2	2	6-5	2

For SI: 1 inch = 25.4 mm, 1 foot = 304.8 mm.

a. Spans are given in feet and inches (ft-in).

b. Spans are based on minimum design properties for No. 2 Grade lumber of Douglas fir-larch, hem-fir, and spruce-pine-fir. No. 1 or better grade lumber shall be used for southern pine.

c. Building width is measured perpendicular to the ridge. For widths between those shown, spans are permitted to be interpolated.

d. NJ - Number of jack studs required to support each end. Where the number of required jack studs equals one, the headers are permitted to be supported by an approved framing anchor attached to the full-height wall stud and to the header.

TABLE 2308.10.2(1)
CEILING JOIST SPANS FOR COMMON LUMBER SPECIES
(Uninhabitable Attics Without Storage, Live Load = 10 pounds psf, L/Δ = 240)

CEILING JOIST SPACING (inches)	SPECIES AND GRADE		DEAD LOAD = 5 pounds per square foot			
			2 × 4	2 × 6	2 × 8	2 × 10
			Maximum ceiling joist spans			
			(ft. - in.)	(ft. - in.)	(ft. - in.)	(ft. - in.)
12	Douglas Fir-Larch	SS	13-2	20-8	26-0	26-0
	Douglas Fir-Larch	#1	12-8	19-11	26-0	26-0
	Douglas Fir-Larch	#2	12-5	19-6	25-8	26-0
	Douglas Fir-Larch	#3	10-10	15-10	20-1	24-6
	Hem-Fir	SS	12-5	19-6	25-8	26-0
	Hem-Fir	#1	12-2	19-1	25-2	26-0
	Hem-Fir	#2	11-7	18-2	24-0	26-0
	Hem-Fir	#3	10-10	15-10	20-1	24-6
	Southern Pine	SS	12-11	20-3	26-0	26-0
	Southern Pine	#1	12-5	19-6	25-8	26-0
	Southern Pine	#2	11-10	18-8	24-7	26-0
	Southern Pine	#3	10-1	14-11	18-9	22-9
	Spruce-Pine-Fir	SS	12-2	19-1	25-2	26-0
	Spruce-Pine-Fir	#1	11-10	18-8	24-7	26-0
	Spruce-Pine-Fir	#2	11-10	18-8	24-7	26-0
	Spruce-Pine-Fir	#3	10-10	15-10	20-1	24-6
16	Douglas Fir-Larch	SS	11-11	18-9	24-8	26-0
	Douglas Fir-Larch	#1	11-6	18-1	23-10	26-0
	Douglas Fir-Larch	#2	11-3	17-8	23-0	26-0
	Douglas Fir-Larch	#3	9-5	13-9	17-5	21-3
	Hem-Fir	SS	11-3	17-8	23-4	26-0
	Hem-Fir	#1	11-0	17-4	22-10	26-0
	Hem-Fir	#2	10-6	16-6	21-9	26-0
	Hem-Fir	#3	9-5	13-9	17-5	21-3
	Southern Pine	SS	11-9	18-5	24-3	26-0
	Southern Pine	#1	11-3	17-8	23-4	26-0
	Southern Pine	#2	10-9	16-11	21-7	25-7
	Southern Pine	#3	8-9	12-11	16-3	19-9
	Spruce-Pine-Fir	SS	11-0	17-4	22-10	26-0
	Spruce-Pine-Fir	#1	10-9	16-11	22-4	26-0
	Spruce-Pine-Fir	#2	10-9	16-11	22-4	26-0
	Spruce-Pine-Fir	#3	9-5	13-9	17-5	21-3

(continued)

TABLE 2308.10.2(1)—continued
CEILING JOIST SPANS FOR COMMON LUMBER SPECIES
(Uninhabitable Attics Without Storage, Live Load = 10 pounds psf, L/Δ = 240)

CEILING JOIST SPACING (inches)	SPECIES AND GRADE		DEAD LOAD = 5 pounds per square foot			
			2 × 4	2 × 6	2 × 8	2 × 10
			Maximum ceiling joist spans			
			(ft. - in.)	(ft. - in.)	(ft. - in.)	(ft. - in.)
19.2	Douglas Fir-Larch	SS	11-3	17-8	23-3	26-0
	Douglas Fir-Larch	#1	10-10	17-0	22-5	26-0
	Douglas Fir-Larch	#2	10-7	16-7	21-0	25-8
	Douglas Fir-Larch	#3	8-7	12-6	15-10	19-5
	Hem-Fir	SS	10-7	16-8	21-11	26-0
	Hem-Fir	#1	10-4	16-4	21-6	26-0
	Hem-Fir	#2	9-11	15-7	20-6	25-3
	Hem-Fir	#3	8-7	12-6	15-10	19-5
	Southern Pine	SS	11-0	17-4	22-10	26-0
	Southern Pine	#1	10-7	16-8	22-0	26-0
	Southern Pine	#2	10-2	15-7	19-8	23-5
	Southern Pine	#3	8-0	11-9	14-10	18-0
	Spruce-Pine-Fir	SS	10-4	16-4	21-6	26-0
	Spruce-Pine-Fir	#1	10-2	15-11	21-0	25-8
	Spruce-Pine-Fir	#2	10-2	15-11	21-0	25-8
	Spruce-Pine-Fir	#3	8-7	12-6	15-10	19-5
24	Douglas Fir-Larch	SS	10-5	16-4	21-7	26-0
	Douglas Fir-Larch	#1	10-0	15-9	20-1	24-6
	Douglas Fir-Larch	#2	9-10	14-10	18-9	22-11
	Douglas Fir-Larch	#3	7-8	11-2	14-2	17-4
	Hem-Fir	SS	9-10	15-6	20-5	26-0
	Hem-Fir	#1	9-8	15-2	19-7	23-11
	Hem-Fir	#2	9-2	14-5	18-6	22-7
	Hem-Fir	#3	7-8	11-2	14-2	17-4
	Southern Pine	SS	10-3	16-1	21-2	26-0
	Southern Pine	#1	9-10	15-6	20-5	24-0
	Southern Pine	#2	9-3	13-11	17-7	20-11
	Southern Pine	#3	7-2	10-6	13-3	16-1
	Spruce-Pine-Fir	SS	9-8	15-2	19-11	25-5
	Spruce-Pine-Fir	#1	9-5	14-9	18-9	22-11
	Spruce-Pine-Fir	#2	9-5	14-9	18-9	22-11
	Spruce-Pine-Fir	#3	7-8	11-2	14-2	17-4

For SI: 1 inch = 25.4 mm, 1 foot = 304.8 mm, 1 pound per square foot = 47.8 N/m^2.

TABLE 2308.10.2(2)
CEILING JOIST SPANS FOR COMMON LUMBER SPECIES
(Uninhabitable Attics With Limited Storage, Live Load = 20 pounds per square foot, L/Δ = 240)

CEILING JOIST SPACING (inches)	SPECIES AND GRADE		DEAD LOAD = 10 pounds per square foot			
			2 × 4	2 × 6	2 × 8	2 × 10
			Maximum ceiling joist spans			
			(ft. - in.)	(ft. - in.)	(ft. - in.)	(ft. - in.)
12	Douglas Fir-Larch	SS	10-5	16-4	21-7	26-0
	Douglas Fir-Larch	#1	10-0	15-9	20-1	24-6
	Douglas Fir-Larch	#2	9-10	14-10	18-9	22-11
	Douglas Fir-Larch	#3	7-8	11-2	14-2	17-4
	Hem-Fir	SS	9-10	15-6	20-5	26-0
	Hem-Fir	#1	9-8	15-2	19-7	23-11
	Hem-Fir	#2	9-2	14-5	18-6	22-7
	Hem-Fir	#3	7-8	11-2	14-2	17-4
	Southern Pine	SS	10-3	16-1	21-2	26-0
	Southern Pine	#1	9-10	15-6	20-5	24-0
	Southern Pine	#2	9-3	13-11	17-7	20-11
	Southern Pine	#3	7-2	10-6	13-3	16-1
	Spruce-Pine-Fir	SS	9-8	15-2	19-11	25-5
	Spruce-Pine-Fir	#1	9-5	14-9	18-9	22-11
	Spruce-Pine-Fir	#2	9-5	14-9	18-9	22-11
	Spruce-Pine-Fir	#3	7-8	11-2	14-2	17-4
16	Douglas Fir-Larch	SS	9-6	14-11	19-7	25-0
	Douglas Fir-Larch	#1	9-1	13-9	17-5	21-3
	Douglas Fir-Larch	#2	8-9	12-10	16-3	19-10
	Douglas Fir-Larch	#3	6-8	9-8	12-4	15-0
	Hem-Fir	SS	8-11	14-1	18-6	23-8
	Hem-Fir	#1	8-9	13-5	16-10	20-8
	Hem-Fir	#2	8-4	12-8	16-0	19-7
	Hem-Fir	#3	6-8	9-8	12-4	15-0
	Southern Pine	SS	9-4	14-7	19-3	24-7
	Southern Pine	#1	8-11	14-0	17-9	20-9
	Southern Pine	#2	8-0	12-0	15-3	18-1
	Southern Pine	#3	6-2	9-2	11-6	14-0
	Spruce-Pine-Fir	SS	8-9	13-9	18-1	23-1
	Spruce-Pine-Fir	#1	8-7	12-10	16-3	19-10
	Spruce-Pine-Fir	#2	8-7	12-10	16-3	19-10
	Spruce-Pine-Fir	#3	6-8	9-8	12-4	15-0

(continued)

TABLE 2308.10.2(2)—continued
CEILING JOIST SPANS FOR COMMON LUMBER SPECIES
(Uninhabitable Attics With Limited Storage, Live Load = 20 pounds per square foot, L/Δ = 240)

CEILING JOIST SPACING (inches)	SPECIES AND GRADE		DEAD LOAD = 10 pounds per square foot			
			2 × 4	2 × 6	2 × 8	2 × 10
			Maximum ceiling joist spans			
			(ft. - in.)	(ft. - in.)	(ft. - in.)	(ft. - in.)
19.2	Douglas Fir-Larch	SS	8-11	14-0	18-5	23-4
	Douglas Fir-Larch	#1	8-7	12-6	15-10	19-5
	Douglas Fir-Larch	#2	8-0	11-9	14-10	18-2
	Douglas Fir-Larch	#3	6-1	8-10	11-3	13-8
	Hem-Fir	SS	8-5	13-3	17-5	22-3
	Hem-Fir	#1	8-3	12-3	15-6	18-11
	Hem-Fir	#2	7-10	11-7	14-8	17-10
	Hem-Fir	#3	6-1	8-10	11-3	13-8
	Southern Pine	SS	8-9	13-9	18-2	23-1
	Southern Pine	#1	8-5	12-9	16-2	18-11
	Southern Pine	#2	7-4	11-0	13-11	16-6
	Southern Pine	#3	5-8	8-4	10-6	12-9
	Spruce-Pine-Fir	SS	8-3	12-11	17-1	21-8
	Spruce-Pine-Fir	#1	8-0	11-9	14-10	18-2
	Spruce-Pine-Fir	#2	8-0	11-9	14-10	18-2
	Spruce-Pine-Fir	#3	6-1	8-10	11-3	13-8
24	Douglas Fir-Larch	SS	8-3	13-0	17-1	20-11
	Douglas Fir-Larch	#1	7-8	11-2	14-2	17-4
	Douglas Fir-Larch	#2	7-2	10-6	13-3	16-3
	Douglas Fir-Larch	#3	5-5	7-11	10-0	12-3
	Hem-Fir	SS	7-10	12-3	16-2	20-6
	Hem-Fir	#1	7-6	10-11	13-10	16-11
	Hem-Fir	#2	7-1	10-4	13-1	16-0
	Hem-Fir	#3	5-5	7-11	10-0	12-3
	Southern Pine	SS	8-1	12-9	16-10	21-6
	Southern Pine	#1	7-8	11-5	14-6	16-11
	Southern Pine	#2	6-7	9-10	12-6	14-9
	Southern Pine	#3	5-1	7-5	9-5	11-5
	Spruce-Pine-Fir	SS	7-8	12-0	15-10	19-5
	Spruce-Pine-Fir	#1	7-2	10-6	13-3	16-3
	Spruce-Pine-Fir	#2	7-2	10-6	13-3	16-3
	Spruce-Pine-Fir	#3	5-5	7-11	10-0	12-3

For SI: 1 inch = 25.4 mm, 1 foot = 304.8 mm, 1 pound per square foot = 47.8 N/m^2.

TABLE 2308.10.3(1)
RAFTER SPANS FOR COMMON LUMBER SPECIES
(Roof Live Load = 20 pounds per square foot, Ceiling Not Attached to Rafters, L/Δ = 180)

RAFTER SPACING (inches)	SPECIES AND GRADE		DEAD LOAD = 10 pounds per square foot					DEAD LOAD = 20 pounds per square foot				
			2 × 4	2 × 6	2 × 8	2 × 10	2 × 12	2 × 4	2 × 6	2 × 8	2 × 10	2 × 12
			Maximum rafter spans									
			(ft. - in.)	(ft. - in.)	(ft. - in.)	(ft. - in.)	(ft. - in.)	(ft. - in.)	(ft. - in.)	(ft. - in.)	(ft. - in.)	(ft. - in.)
12	Douglas Fir-Larch	SS	11-6	18-0	23-9	26-0	26-0	11-6	18-0	23-5	26-0	26-0
	Douglas Fir-Larch	#1	11-1	17-4	22-5	26-0	26-0	10-6	15-4	19-5	23-9	26-0
	Douglas Fir-Larch	#2	10-10	16-7	21-0	25-8	26-0	9-10	14-4	18-2	22-3	25-9
	Douglas Fir-Larch	#3	8-7	12-6	15-10	19-5	22-6	7-5	10-10	13-9	16-9	19-6
	Hem-Fir	SS	10-10	17-0	22-5	26-0	26-0	10-10	17-0	22-5	26-0	26-0
	Hem-Fir	#1	10-7	16-8	21-10	26-0	26-0	10-3	14-11	18-11	23-2	26-0
	Hem-Fir	#2	10-1	15-11	20-8	25-3	26-0	9-8	14-2	17-11	21-11	25-5
	Hem-Fir	#3	8-7	12-6	15-10	19-5	22-6	7-5	10-10	13-9	16-9	19-6
	Southern Pine	SS	11-3	17-8	23-4	26-0	26-0	11-3	17-8	23-4	26-0	26-0
	Southern Pine	#1	10-10	17-0	22-5	26-0	26-0	10-6	15-8	19-10	23-2	26-0
	Southern Pine	#2	10-4	15-7	19-8	23-5	26-0	9-0	13-6	17-1	20-3	23-10
	Southern Pine	#3	8-0	11-9	14-10	18-0	21-4	6-11	10-2	12-10	15-7	18-6
	Spruce-Pine-Fir	SS	10-7	16-8	21-11	26-0	26-0	10-7	16-8	21-9	26-0	26-0
	Spruce-Pine-Fir	#1	10-4	16-3	21-0	25-8	26-0	9-10	14-4	18-2	22-3	25-9
	Spruce-Pine-Fir	#2	10-4	16-3	21-0	25-8	26-0	9-10	14-4	18-2	22-3	25-9
	Spruce-Pine-Fir	#3	8-7	12-6	15-10	19-5	22-6	7-5	10-10	13-9	16-9	19-6
16	Douglas Fir-Larch	SS	10-5	16-4	21-7	26-0	26-0	10-5	16-0	20-3	24-9	26-0
	Douglas Fir-Larch	#1	10-0	15-4	19-5	23-9	26-0	9-1	13-3	16-10	20-7	23-10
	Douglas Fir-Larch	#2	9-10	14-4	18-2	22-3	25-9	8-6	12-5	15-9	19-3	22-4
	Douglas Fir-Larch	#3	7-5	10-10	13-9	16-9	19-6	6-5	9-5	11-11	14-6	16-10
	Hem-Fir	SS	9-10	15-6	20-5	26-0	26-0	9-10	15-6	19-11	24-4	26-0
	Hem-Fir	#1	9-8	14-11	18-11	23-2	26-0	8-10	12-11	16-5	20-0	23-3
	Hem-Fir	#2	9-2	14-2	17-11	21-11	25-5	8-5	12-3	15-6	18-11	22-0
	Hem-Fir	#3	7-5	10-10	13-9	16-9	19-6	6-5	9-5	11-11	14-6	16-10
	Southern Pine	SS	10-3	16-1	21-2	26-0	26-0	10-3	16-1	21-2	25-7	26-0
	Southern Pine	#1	9-10	15-6	19-10	23-2	26-0	9-1	13-7	17-2	20-1	23-10
	Southern Pine	#2	9-0	13-6	17-1	20-3	23-10	7-9	11-8	14-9	17-6	20-8
	Southern Pine	#3	6-11	10-2	12-10	15-7	18-6	6-0	8-10	11-2	13-6	16-0
	Spruce-Pine-Fir	SS	9-8	15-2	19-11	25-5	26-0	9-8	14-10	18-10	23-0	26-0
	Spruce-Pine-Fir	#1	9-5	14-4	18-2	22-3	25-9	8-6	12-5	15-9	19-3	22-4
	Spruce-Pine-Fir	#2	9-5	14-4	18-2	22-3	25-9	8-6	12-5	15-9	19-3	22-4
	Spruce-Pine-Fir	#3	7-5	10-10	13-9	16-9	19-6	6-5	9-5	11-11	14-6	16-10

(continued)

TABLE 2308.10.3(1)—continued
RAFTER SPANS FOR COMMON LUMBER SPECIES
(Roof Live Load = 20 pounds per square foot, Ceiling Not Attached to Rafters, L/Δ = 180)

RAFTER SPACING (inches)	SPECIES AND GRADE		DEAD LOAD = 10 pounds per square foot					DEAD LOAD = 20 pounds per square foot				
			2 × 4	2 × 6	2 × 8	2 × 10	2 × 12	2 × 4	2 × 6	2 × 8	2 × 10	2 × 12
			Maximum rafter spans									
			(ft. - in.)	(ft. - in.)	(ft. - in.)	(ft. - in.)	(ft. - in.)	(ft. - in.)	(ft. - in.)	(ft. - in.)	(ft. - in.)	(ft. - in.)
19.2	Douglas Fir-Larch	SS	9-10	15-5	20-4	25-11	26-0	9-10	14-7	18-6	22-7	26-0
	Douglas Fir-Larch	#1	9-5	14-0	17-9	21-8	25-2	8-4	12-2	15-4	18-9	21-9
	Douglas Fir-Larch	#2	8-11	13-1	16-7	20-3	23-6	7-9	11-4	14-4	17-7	20-4
	Douglas Fir-Larch	#3	6-9	9-11	12-7	15-4	17-9	5-10	8-7	10-10	13-3	15-5
	Hem-Fir	SS	9-3	14-7	19-2	24-6	26-0	9-3	14-4	18-2	22-3	25-9
	Hem-Fir	#1	9-1	13-8	17-4	21-1	24-6	8-1	11-10	15-0	18-4	21-3
	Hem-Fir	#2	8-8	12-11	16-4	20-0	23-2	7-8	11-2	14-2	17-4	20-1
	Hem-Fir	#3	6-9	9-11	12-7	15-4	17-9	5-10	8-7	10-10	13-3	15-5
	Southern Pine	SS	9-8	15-2	19-11	25-5	26-0	9-8	15-2	19-7	23-4	26-0
	Southern Pine	#1	9-3	14-3	18-1	21-2	25-2	8-4	12-4	15-8	18-4	21-9
	Southern Pine	#2	8-2	12-3	15-7	18-6	21-9	7-1	10-8	13-6	16-0	18-10
	Southern Pine	#3	6-4	9-4	11-9	14-3	16-10	5-6	8-1	10-2	12-4	14-7
	Spruce-Pine-Fir	SS	9-1	14-3	18-9	23-11	26-0	9-1	13-7	17-2	21-0	24-4
	Spruce-Pine-Fir	#1	8-10	13-1	16-7	20-3	23-6	7-9	11-4	14-4	17-7	20-4
	Spruce-Pine-Fir	#2	8-10	13-1	16-7	20-3	23-6	7-9	11-4	14-4	17-7	20-4
	Spruce-Pine-Fir	#3	6-9	9-11	12-7	15-4	17-9	5-10	8-7	10-10	13-3	15-5
24	Douglas Fir-Larch	SS	9-1	14-4	18-10	23-4	26-0	8-11	13-1	16-7	20-3	23-5
	Douglas Fir-Larch	#1	8-7	12-6	15-10	19-5	22-6	7-5	10-10	13-9	16-9	19-6
	Douglas Fir-Larch	#2	8-0	11-9	14-10	18-2	21-0	6-11	10-2	12-10	15-8	18-3
	Douglas Fir-Larch	#3	6-1	8-10	11-3	13-8	15-11	5-3	7-8	9-9	11-10	13-9
	Hem-Fir	SS	8-7	13-6	17-10	22-9	26-0	8-7	12-10	16-3	19-10	23-0
	Hem-Fir	#1	8-4	12-3	15-6	18-11	21-11	7-3	10-7	13-5	16-4	19-0
	Hem-Fir	#2	7-11	11-7	14-8	17-10	20-9	6-10	10-0	12-8	15-6	17-11
	Hem-Fir	#3	6-1	8-10	11-3	13-8	15-11	5-3	7-8	9-9	11-10	13-9
	Southern Pine	SS	8-11	14-1	18-6	23-8	26-0	8-11	13-10	17-6	20-10	24-8
	Southern Pine	#1	8-7	12-9	16-2	18-11	22-6	7-5	11-1	14-0	16-5	19-6
	Southern Pine	#2	7-4	11-0	13-11	16-6	19-6	6-4	9-6	12-1	14-4	16-10
	Southern Pine	#3	5-8	8-4	10-6	12-9	15-1	4-11	7-3	9-1	11-0	13-1
	Spruce-Pine-Fir	SS	8-5	13-3	17-5	21-8	25-2	8-4	12-2	15-4	18-9	21-9
	Spruce-Pine-Fir	#1	8-0	11-9	14-10	18-2	21-0	6-11	10-2	12-10	15-8	18-3
	Spruce-Pine-Fir	#2	8-0	11-9	14-10	18-2	21-0	6-11	10-2	12-10	15-8	18-3
	Spruce-Pine-Fir	#3	6-1	8-10	11-3	13-8	15-11	5-3	7-8	9-9	11-10	13-9

For SI: 1 inch = 25.4 mm, 1 foot = 304.8 mm, 1 pound per square foot = 47.9 N/m^2.

TABLE 2308.10.3(2)
RAFTER SPANS FOR COMMON LUMBER SPECIES
(Roof Live Load = 20 pounds per square foot, Ceiling Attached to Rafters, L/Δ = 240)

RAFTER SPACING (inches)	SPECIES AND GRADE		DEAD LOAD = 10 pounds per square foot					DEAD LOAD = 20 pounds per square foot				
			2 × 4	2 × 6	2 × 8	2 × 10	2 × 12	2 × 4	2 × 6	2 × 8	2 × 10	2 × 12
			Maximum rafter spans									
			(ft. - in.)	(ft. - in.)	(ft. - in.)	(ft. - in.)	(ft. - in.)	(ft. - in.)	(ft. - in.)	(ft. - in.)	(ft. - in.)	(ft. - in.)
12	Douglas Fir-Larch	SS	10-5	16-4	21-7	26-0	26-0	10-5	16-4	21-7	26-0	26-0
	Douglas Fir-Larch	#1	10-0	15-9	20-10	26-0	26-0	10-0	15-4	19-5	23-9	26-0
	Douglas Fir-Larch	#2	9-10	15-6	20-5	25-8	26-0	9-10	14-4	18-2	22-3	25-9
	Douglas Fir-Larch	#3	8-7	12-6	15-10	19-5	22-6	7-5	10-10	13-9	16-9	19-6
	Hem-Fir	SS	9-10	15-6	20-5	26-0	26-0	9-10	15-6	20-5	26-0	26-0
	Hem-Fir	#1	9-8	15-2	19-11	25-5	26-0	9-8	14-11	18-11	23-2	26-0
	Hem-Fir	#2	9-2	14-5	19-0	24-3	26-0	9-2	14-2	17-11	21-11	25-5
	Hem-Fir	#3	8-7	12-6	15-10	19-5	22-6	7-5	10-10	13-9	16-9	19-6
	Southern Pine	SS	10-3	16-1	21-2	26-0	26-0	10-3	16-1	21-2	26-0	26-0
	Southern Pine	#1	9-10	15-6	20-5	26-0	26-0	9-10	15-6	19-10	23-2	26-0
	Southern Pine	#2	9-5	14-9	19-6	23-5	26-0	9-0	13-6	17-1	20-3	23-10
	Southern Pine	#3	8-0	11-9	14-10	18-0	21-4	6-11	10-2	12-10	15-7	18-6
	Spruce-Pine-Fir	SS	9-8	15-2	19-11	25-5	26-0	9-8	15-2	19-11	25-5	26-0
	Spruce-Pine-Fir	#1	9-5	14-9	19-6	24-10	26-0	9-5	14-4	18-2	22-3	25-9
	Spruce-Pine-Fir	#2	9-5	14-9	19-6	24-10	26-0	9-5	14-4	18-2	22-3	25-9
	Spruce-Pine-Fir	#3	8-7	12-6	15-10	19-5	22-6	7-5	10-10	13-9	16-9	19-6
16	Douglas Fir-Larch	SS	9-6	14-11	19-7	25-0	26-0	9-6	14-11	19-7	24-9	26-0
	Douglas Fir-Larch	#1	9-1	14-4	18-11	23-9	26-0	9-1	13-3	16-10	20-7	23-10
	Douglas Fir-Larch	#2	8-11	14-1	18-2	22-3	25-9	8-6	12-5	15-9	19-3	22-4
	Douglas Fir-Larch	#3	7-5	10-10	13-9	16-9	19-6	6-5	9-5	11-11	14-6	16-10
	Hem-Fir	SS	8-11	14-1	18-6	23-8	26-0	8-11	14-1	18-6	23-8	26-0
	Hem-Fir	#1	8-9	13-9	18-1	23-1	26-0	8-9	12-11	16-5	20-0	23-3
	Hem-Fir	#2	8-4	13-1	17-3	21-11	25-5	8-4	12-3	15-6	18-11	22-0
	Hem-Fir	#3	7-5	10-10	13-9	16-9	19-6	6-5	9-5	11-11	14-6	16-10
	Southern Pine	SS	9-4	14-7	19-3	24-7	26-0	9-4	14-7	19-3	24-7	26-0
	Southern Pine	#1	8-11	14-1	18-6	23-2	26-0	8-11	13-7	17-2	20-1	23-10
	Southern Pine	#2	8-7	13-5	17-1	20-3	23-10	7-9	11-8	14-9	17-6	20-8
	Southern Pine	#3	6-11	10-2	12-10	15-7	18-6	6-0	8-10	11-2	13-6	16-0
	Spruce-Pine-Fir	SS	8-9	13-9	18-1	23-1	26-0	8-9	13-9	18-1	23-0	26-0
	Spruce-Pine-Fir	#1	8-7	13-5	17-9	22-3	25-9	8-6	12-5	15-9	19-3	22-4
	Spruce-Pine-Fir	#2	8-7	13-5	17-9	22-3	25-9	8-6	12-5	15-9	19-3	22-4
	Spruce-Pine-Fir	#3	7-5	10-10	13-9	16-9	19-6	6-5	9-5	11-11	14-6	16-10

(continued)

TABLE 2308.10.3(2)—continued
RAFTER SPANS FOR COMMON LUMBER SPECIES
(Roof Live Load = 20 pounds per square foot, Ceiling Attached to Rafters, L/Δ = 240)

RAFTER SPACING (inches)	SPECIES AND GRADE		DEAD LOAD = 10 pounds per square foot					DEAD LOAD = 20 pounds per square foot				
			2 × 4	2 × 6	2 × 8	2 × 10	2 × 12	2 × 4	2 × 6	2 × 8	2 × 10	2 × 12
			Maximum rafter spans									
			(ft. - in.)	(ft. - in.)	(ft. - in.)	(ft. - in.)	(ft. - in.)	(ft. - in.)	(ft. - in.)	(ft. - in.)	(ft. - in.)	(ft. - in.)
19.2	Douglas Fir-Larch	SS	8-11	14-0	18-5	23-7	26-0	8-11	14-0	18-5	22-7	26-0
	Douglas Fir-Larch	#1	8-7	13-6	17-9	21-8	25-2	8-4	12-2	15-4	18-9	21-9
	Douglas Fir-Larch	#2	8-5	13-1	16-7	20-3	23-6	7-9	11-4	14-4	17-7	20-4
	Douglas Fir-Larch	#3	6-9	9-11	12-7	15-4	17-9	5-10	8-7	10-10	13-3	15-5
	Hem-Fir	SS	8-5	13-3	17-5	22-3	26-0	8-5	13-3	17-5	22-3	25-9
	Hem-Fir	#1	8-3	12-11	17-1	21-1	24-6	8-1	11-10	15-0	18-4	21-3
	Hem-Fir	#2	7-10	12-4	16-3	20-0	23-2	7-8	11-2	14-2	17-4	20-1
	Hem-Fir	#3	6-9	9-11	12-7	15-4	17-9	5-10	8-7	10-10	13-3	15-5
	Southern Pine	SS	8-9	13-9	18-2	23-1	26-0	8-9	13-9	18-2	23-1	26-0
	Southern Pine	#1	8-5	13-3	17-5	21-2	25-2	8-4	12-4	15-8	18-4	21-9
	Southern Pine	#2	8-1	12-3	15-7	18-6	21-9	7-1	10-8	13-6	16-0	18-10
	Southern Pine	#3	6-4	9-4	11-9	14-3	16-10	5-6	8-1	10-2	12-4	14-7
	Spruce-Pine-Fir	SS	8-3	12-11	17-1	21-9	26-0	8-3	12-11	17-1	21-0	24-4
	Spruce-Pine-Fir	#1	8-1	12-8	16-7	20-3	23-6	7-9	11-4	14-4	17-7	20-4
	Spruce-Pine-Fir	#2	8-1	12-8	16-7	20-3	23-6	7-9	11-4	14-4	17-7	20-4
	Spruce-Pine-Fir	#3	6-9	9-11	12-7	15-4	17-9	5-10	8-7	10-10	13-3	15-5
24	Douglas Fir-Larch	SS	8-3	13-0	17-2	21-10	26-0	8-3	13-0	16-7	20-3	23-5
	Douglas Fir-Larch	#1	8-0	12-6	15-10	19-5	22-6	7-5	10-10	13-9	16-9	19-6
	Douglas Fir-Larch	#2	7-10	11-9	14-10	18-2	21-0	6-11	10-2	12-10	15-8	18-3
	Douglas Fir-Larch	#3	6-1	8-10	11-3	13-8	15-11	5-3	7-8	9-9	11-10	13-9
	Hem-Fir	SS	7-10	12-3	16-2	20-8	25-1	7-10	12-3	16-2	19-10	23-0
	Hem-Fir	#1	7-8	12-0	15-6	18-11	21-11	7-3	10-7	13-5	16-4	19-0
	Hem-Fir	#2	7-3	11-5	14-8	17-10	20-9	6-10	10-0	12-8	15-6	17-11
	Hem-Fir	#3	6-1	8-10	11-3	13-8	15-11	5-3	7-8	9-9	11-10	13-9
	Southern Pine	SS	8-1	12-9	16-10	21-6	26-0	8-1	12-9	16-10	20-10	24-8
	Southern Pine	#1	7-10	12-3	16-2	18-11	22-6	7-5	11-1	14-0	16-5	19-6
	Southern Pine	#2	7-4	11-0	13-11	16-6	19-6	6-4	9-6	12-1	14-4	16-10
	Southern Pine	#3	5-8	8-4	10-6	12-9	15-1	4-11	7-3	9-1	11-0	13-1
	Spruce-Pine-Fir	SS	7-8	12-0	15-10	20-2	24-7	7-8	12-0	15-4	18-9	21-9
	Spruce-Pine-Fir	#1	7-6	11-9	14-10	18-2	21-0	6-11	10-2	12-10	15-8	18-3
	Spruce-Pine-Fir	#2	7-6	11-9	14-10	18-2	21-0	6-11	10-2	12-10	15-8	18-3
	Spruce-Pine-Fir	#3	6-1	8-10	11-3	13-8	15-11	5-3	7-8	9-9	11-10	13-9

For SI: 1 inch = 25.4 mm, 1 foot = 304.8 mm, 1 pound per square foot = 47.9 N/m^2.

TABLE 2308.10.3(3)
RAFTER SPANS FOR COMMON LUMBER SPECIES
(Ground Snow Load = 30 pounds per square foot, Ceiling Not Attached to Rafters, L/Δ = 180)

RAFTER SPACING (inches)	SPECIES AND GRADE		DEAD LOAD = 10 pounds per square foot					DEAD LOAD = 20 pounds per square foot				
			2 × 4	2 × 6	2 × 8	2 × 10	2 × 12	2 × 4	2 × 6	2 × 8	2 × 10	2 × 12
			Maximum rafter spans									
			(ft. - in.)	(ft. - in.)	(ft. - in.)	(ft. - in.)	(ft. - in.)	(ft. - in.)	(ft. - in.)	(ft. - in.)	(ft. - in.)	(ft. - in.)
12	Douglas Fir-Larch	SS	10-0	15-9	20-9	26-0	26-0	10-0	15-9	20-1	24-6	26-0
	Douglas Fir-Larch	#1	9-8	14-9	18-8	22-9	26-0	9-0	13-2	16-8	20-4	23-7
	Douglas Fir-Larch	#2	9-5	13-9	17-5	21-4	24-8	8-5	12-4	15-7	19-1	22-1
	Douglas Fir-Larch	#3	7-1	10-5	13-2	16-1	18-8	6-4	9-4	11-9	14-5	16-8
	Hem-Fir	SS	9-6	14-10	19-7	25-0	26-0	9-6	14-10	19-7	24-1	26-0
	Hem-Fir	#1	9-3	14-4	18-2	22-2	25-9	8-9	12-10	16-3	19-10	23-0
	Hem-Fir	#2	8-10	13-7	17-2	21-0	24-4	8-4	12-2	15-4	18-9	21-9
	Hem-Fir	#3	7-1	10-5	13-2	16-1	18-8	6-4	9-4	11-9	14-5	16-8
	Southern Pine	SS	9-10	15-6	20-5	26-0	26-0	9-10	15-6	20-5	25-4	26-0
	Southern Pine	#1	9-6	14-10	19-0	22-3	26-0	9-0	13-5	17-0	19-11	23-7
	Southern Pine	#2	8-7	12-11	16-4	19-5	22-10	7-8	11-7	14-8	17-4	20-5
	Southern Pine	#3	6-7	9-9	12-4	15-0	17-9	5-11	8-9	11-0	13-5	15-10
	Spruce-Pine-Fir	SS	9-3	14-7	19-2	24-6	26-0	9-3	14-7	18-8	22-9	26-0
	Spruce-Pine-Fir	#1	9-1	13-9	17-5	21-4	24-8	8-5	12-4	15-7	19-1	22-1
	Spruce-Pine-Fir	#2	9-1	13-9	17-5	21-4	24-8	8-5	12-4	15-7	19-1	22-1
	Spruce-Pine-Fir	#3	7-1	10-5	13-2	16-1	18-8	6-4	9-4	11-9	14-5	16-8
16	Douglas Fir-Larch	SS	9-1	14-4	18-10	23-9	26-0	9-1	13-9	17-5	21-3	24-8
	Douglas Fir-Larch	#1	8-9	12-9	16-2	19-9	22-10	7-10	11-5	14-5	17-8	20-5
	Douglas Fir-Larch	#2	8-2	11-11	15-1	18-5	21-5	7-3	10-8	13-6	16-6	19-2
	Douglas Fir-Larch	#3	6-2	9-0	11-5	13-11	16-2	5-6	8-1	10-3	12-6	14-6
	Hem-Fir	SS	8-7	13-6	17-10	22-9	26-0	8-7	13-6	17-1	20-10	24-2
	Hem-Fir	#1	8-5	12-5	15-9	19-3	22-3	7-7	11-1	14-1	17-2	19-11
	Hem-Fir	#2	8-0	11-9	14-11	18-2	21-1	7-2	10-6	13-4	16-3	18-10
	Hem-Fir	#3	6-2	9-0	11-5	13-11	16-2	5-6	8-1	10-3	12-6	14-6
	Southern Pine	SS	8-11	14-1	18-6	23-8	26-0	8-11	14-1	18-5	21-11	25-11
	Southern Pine	#1	8-7	13-0	16-6	19-3	22-10	7-10	11-7	14-9	17-3	20-5
	Southern Pine	#2	7-6	11-2	14-2	16-10	19-10	6-8	10-0	12-8	15-1	17-9
	Southern Pine	#3	5-9	8-6	10-8	13-0	15-4	5-2	7-7	9-7	11-7	13-9
	Spruce-Pine-Fir	SS	8-5	13-3	17-5	22-1	25-7	8-5	12-9	16-2	19-9	22-10
	Spruce-Pine-Fir	#1	8-2	11-11	15-1	18-5	21-5	7-3	10-8	13-6	16-6	19-2
	Spruce-Pine-Fir	#2	8-2	11-11	15-1	18-5	21-5	7-3	10-8	13-6	16-6	19-2
	Spruce-Pine-Fir	#3	6-2	9-0	11-5	13-11	16-2	5-6	8-1	10-3	12-6	14-6

(continued)

TABLE 2308.10.3(3)—continued
RAFTER SPANS FOR COMMON LUMBER SPECIES
(Ground Snow Load = 30 pounds per square foot, Ceiling Not Attached to Rafters, L/Δ = 180)

RAFTER SPACING (inches)	SPECIES AND GRADE		DEAD LOAD = 10 pounds per square foot					DEAD LOAD = 20 pounds per square foot				
			2 × 4	2 × 6	2 × 8	2 × 10	2 × 12	2 × 4	2 × 6	2 × 8	2 × 10	2 × 12
			Maximum rafter spans									
			(ft. - in.)	(ft. - in.)	(ft. - in.)	(ft. - in.)	(ft. - in.)	(ft. - in.)	(ft. - in.)	(ft. - in.)	(ft. - in.)	(ft. - in.)
19.2	Douglas Fir-Larch	SS	8-7	13-6	17-9	21-8	25-2	8-7	12-6	15-10	19-5	22-6
	Douglas Fir-Larch	#1	7-11	11-8	14-9	18-0	20-11	7-1	10-5	13-2	16-1	18-8
	Douglas Fir-Larch	#2	7-5	10-11	13-9	16-10	19-6	6-8	9-9	12-4	15-1	17-6
	Douglas Fir-Larch	#3	5-7	8-3	10-5	12-9	14-9	5-0	7-4	9-4	11-5	13-2
	Hem-Fir	SS	8-1	12-9	16-9	21-4	24-8	8-1	12-4	15-7	19-1	22-1
	Hem-Fir	#1	7-9	11-4	14-4	17-7	20-4	6-11	10-2	12-10	15-8	18-2
	Hem-Fir	#2	7-4	10-9	13-7	16-7	19-3	6-7	9-7	12-2	14-10	17-3
	Hem-Fir	#3	5-7	8-3	10-5	12-9	14-9	5-0	7-4	9-4	11-5	13-2
	Southern Pine	SS	8-5	13-3	17-5	22-3	26-0	8-5	13-3	16-10	20-0	23-7
	Southern Pine	#1	8-0	11-10	15-1	17-7	20-11	7-1	10-7	13-5	15-9	18-8
	Southern Pine	#2	6-10	10-2	12-11	15-4	18-1	6-1	9-2	11-7	13-9	16-2
	Southern Pine	#3	5-3	7-9	9-9	11-10	14-0	4-8	6-11	8-9	10-7	12-6
	Spruce-Pine-Fir	SS	7-11	12-5	16-5	20-2	23-4	7-11	11-8	14-9	18-0	20-11
	Spruce-Pine-Fir	#1	7-5	10-11	13-9	16-10	19-6	6-8	9-9	12-4	15-1	17-6
	Spruce-Pine-Fir	#2	7-5	10-11	13-9	16-10	19-6	6-8	9-9	12-4	15-1	17-6
	Spruce-Pine-Fir	#3	5-7	8-3	10-5	12-9	14-9	5-0	7-4	9-4	11-5	13-2
24	Douglas Fir-Larch	SS	7-11	12-6	15-10	19-5	22-6	7-8	11-3	14-2	17-4	20-1
	Douglas Fir-Larch	#1	7-1	10-5	13-2	16-1	18-8	6-4	9-4	11-9	14-5	16-8
	Douglas Fir-Larch	#2	6-8	9-9	12-4	15-1	17-6	5-11	8-8	11-0	13-6	15-7
	Douglas Fir-Larch	#3	5-0	7-4	9-4	11-5	13-2	4-6	6-7	8-4	10-2	11-10
	Hem-Fir	SS	7-6	11-10	15-7	19-1	22-1	7-6	11-0	13-11	17-0	19-9
	Hem-Fir	#1	6-11	10-2	12-10	15-8	18-2	6-2	9-1	11-6	14-0	16-3
	Hem-Fir	#2	6-7	9-7	12-2	14-10	17-3	5-10	8-7	10-10	13-3	15-5
	Hem-Fir	#3	5-0	7-4	9-4	11-5	13-2	4-6	6-7	8-4	10-2	11-10
	Southern Pine	SS	7-10	12-3	16-2	20-0	23-7	7-10	11-10	15-0	17-11	21-2
	Southern Pine	#1	7-1	10-7	13-5	15-9	18-8	6-4	9-6	12-0	14-1	16-8
	Southern Pine	#2	6-1	9-2	11-7	13-9	16-2	5-5	8-2	10-4	12-3	14-6
	Southern Pine	#3	4-8	6-11	8-9	10-7	12-6	4-2	6-2	7-10	9-6	11-2
	Spruce-Pine-Fir	SS	7-4	11-7	14-9	18-0	20-11	7-1	10-5	13-2	16-1	18-8
	Spruce-Pine-Fir	#1	6-8	9-9	12-4	15-1	17-6	5-11	8-8	11-0	13-6	15-7
	Spruce-Pine-Fir	#2	6-8	9-9	12-4	15-1	17-6	5-11	8-8	11-0	13-6	15-7
	Spruce-Pine-Fir	#3	5-0	7-4	9-4	11-5	13-2	4-6	6-7	8-4	10-2	11-10

For SI: 1 inch = 25.4 mm, 1 foot = 304.8 mm, 1 pound per square foot = 47.9 N/m^2.

TABLE 2308.10.3(5)
RAFTER SPANS FOR COMMON LUMBER SPECIES
(Ground Snow Load = 30 pounds per square foot, Ceiling Attached to Rafters, L/Δ = 240)

RAFTER SPACING (inches)	SPECIES AND GRADE		DEAD LOAD = 10 pounds per square foot					DEAD LOAD = 20 pounds per square foot				
			2 × 4	2 × 6	2 × 8	2 × 10	2 × 12	2 × 4	2 × 6	2 × 8	2 × 10	2 × 12
			Maximum rafter spans									
			(ft. - in.)	(ft. - in.)	(ft. - in.)	(ft. - in.)	(ft. - in.)	(ft. - in.)	(ft. - in.)	(ft. - in.)	(ft. - in.)	(ft. - in.)
12	Douglas Fir-Larch	SS	9-1	14-4	18-10	24-1	26-0	9-1	14-4	18-10	24-1	26-0
	Douglas Fir-Larch	#1	8-9	13-9	18-2	22-9	26-0	8-9	13-2	16-8	20-4	23-7
	Douglas Fir-Larch	#2	8-7	13-6	17-5	21-4	24-8	8-5	12-4	15-7	19-1	22-1
	Douglas Fir-Larch	#3	7-1	10-5	13-2	16-1	18-8	6-4	9-4	11-9	14-5	16-8
	Hem-Fir	SS	8-7	13-6	17-10	22-9	26-0	8-7	13-6	17-10	22-9	26-0
	Hem-Fir	#1	8-5	13-3	17-5	22-2	25-9	8-5	12-10	16-3	19-10	23-0
	Hem-Fir	#2	8-0	12-7	16-7	21-0	24-4	8-0	12-2	15-4	18-9	21-9
	Hem-Fir	#3	7-1	10-5	13-2	16-1	18-8	6-4	9-4	11-9	14-5	16-8
	Southern Pine	SS	8-11	14-1	18-6	23-8	26-0	8-11	14-1	18-6	23-8	26-0
	Southern Pine	#1	8-7	13-6	17-10	22-3	26-0	8-7	13-5	17-0	19-11	23-7
	Southern Pine	#2	8-3	12-11	16-4	19-5	22-10	7-8	11-7	14-8	17-4	20-5
	Southern Pine	#3	6-7	9-9	12-4	15-0	17-9	5-11	8-9	11-0	13-5	15-10
	Spruce-Pine-Fir	SS	8-5	13-3	17-5	22-3	26-0	8-5	13-3	17-5	22-3	26-0
	Spruce-Pine-Fir	#1	8-3	12-11	17-0	21-4	24-8	8-3	12-4	15-7	19-1	22-1
	Spruce-Pine-Fir	#2	8-3	12-11	17-0	21-4	24-8	8-3	12-4	15-7	19-1	22-1
	Spruce-Pine-Fir	#3	7-1	10-5	13-2	16-1	18-8	6-4	9-4	11-9	14-5	16-8
16	Douglas Fir-Larch	SS	8-3	13-0	17-2	21-10	26-0	8-3	13-0	17-2	21-3	24-8
	Douglas Fir-Larch	#1	8-0	12-6	16-2	19-9	22-10	7-10	11-5	14-5	17-8	20-5
	Douglas Fir-Larch	#2	7-10	11-11	15-1	18-5	21-5	7-3	10-8	13-6	16-6	19-2
	Douglas Fir-Larch	#3	6-2	9-0	11-5	13-11	16-2	5-6	8-1	10-3	12-6	14-6
	Hem-Fir	SS	7-10	12-3	16-2	20-8	25-1	7-10	12-3	16-2	20-8	24-2
	Hem-Fir	#1	7-8	12-0	15-9	19-3	22-3	7-7	11-1	14-1	17-2	19-11
	Hem-Fir	#2	7-3	11-5	14-11	18-2	21-1	7-2	10-6	13-4	16-3	18-10
	Hem-Fir	#3	6-2	9-0	11-5	13-11	16-2	5-6	8-1	10-3	12-6	14-6
	Southern Pine	SS	8-1	12-9	16-10	21-6	26-0	8-1	12-9	16-10	21-6	25-11
	Southern Pine	#1	7-10	12-3	16-2	19-3	22-10	7-10	11-7	14-9	17-3	20-5
	Southern Pine	#2	7-6	11-2	14-2	16-10	19-10	6-8	10-0	12-8	15-1	17-9
	Southern Pine	#3	5-9	8-6	10-8	13-0	15-4	5-2	7-7	9-7	11-7	13-9
	Spruce-Pine-Fir	SS	7-8	12-0	15-10	20-2	24-7	7-8	12-0	15-10	19-9	22-10
	Spruce-Pine-Fir	#1	7-6	11-9	15-1	18-5	21-5	7-3	10-8	13-6	16-6	19-2
	Spruce-Pine-Fir	#2	7-6	11-9	15-1	18-5	21-5	7-3	10-8	13-6	16-6	19-2
	Spruce-Pine-Fir	#3	6-2	9-0	11-5	13-11	16-2	5-6	8-1	10-3	12-6	14-6

(continued)

TABLE 2308.10.3(5)—continued
RAFTER SPANS FOR COMMON LUMBER SPECIES
(Ground Snow Load = 30 pounds per square foot, Ceiling Attached to Rafters, L/Δ = 240)

RAFTER SPACING (inches)	SPECIES AND GRADE		DEAD LOAD = 10 pounds per square foot					DEAD LOAD = 20 pounds per square foot				
			2 × 4	2 × 6	2 × 8	2 × 10	2 × 12	2 × 4	2 × 6	2 × 8	2 × 10	2 × 12
			Maximum rafter spans									
			(ft. - in.)	(ft. - in.)	(ft. - in.)	(ft. - in.)	(ft. - in.)	(ft. - in.)	(ft. - in.)	(ft. - in.)	(ft. - in.)	(ft. - in.)
19.2	Douglas Fir-Larch	SS	7-9	12-3	16-1	20-7	25-0	7-9	12-3	15-10	19-5	22-6
	Douglas Fir-Larch	#1	7-6	11-8	14-9	18-0	20-11	7-1	10-5	13-2	16-1	18-8
	Douglas Fir-Larch	#2	7-4	10-11	13-9	16-10	19-6	6-8	9-9	12-4	15-1	17-6
	Douglas Fir-Larch	#3	5-7	8-3	10-5	12-9	14-9	5-0	7-4	9-4	11-5	13-2
	Hem-Fir	SS	7-4	11-7	15-3	19-5	23-7	7-4	11-7	15-3	19-1	22-1
	Hem-Fir	#1	7-2	11-4	14-4	17-7	20-4	6-11	10-2	12-10	15-8	18-2
	Hem-Fir	#2	6-10	10-9	13-7	16-7	19-3	6-7	9-7	12-2	14-10	17-3
	Hem-Fir	#3	5-7	8-3	10-5	12-9	14-9	5-0	7-4	9-4	11-5	13-2
	Southern Pine	SS	7-8	12-0	15-10	20-2	24-7	7-8	12-0	15-10	20-0	23-7
	Southern Pine	#1	7-4	11-7	15-1	17-7	20-11	7-1	10-7	13-5	15-9	18-8
	Southern Pine	#2	6-10	10-2	12-11	15-4	18-1	6-1	9-2	11-7	13-9	16-2
	Southern Pine	#3	5-3	7-9	9-9	11-10	14-0	4-8	6-11	8-9	10-7	12-6
	Spruce-Pine-Fir	SS	7-2	11-4	14-11	19-0	23-1	7-2	11-4	14-9	18-0	20-11
	Spruce-Pine-Fir	#1	7-0	10-11	13-9	16-10	19-6	6-8	9-9	12-4	15-1	17-6
	Spruce-Pine-Fir	#2	7-0	10-11	13-9	16-10	19-6	6-8	9-9	12-4	15-1	17-6
	Spruce-Pine-Fir	#3	5-7	8-3	10-5	12-9	14-9	5-0	7-4	9-4	11-5	13-2
24	Douglas Fir-Larch	SS	7-3	11-4	15-0	19-1	22-6	7-3	11-3	14-2	17-4	20-1
	Douglas Fir-Larch	#1	7-0	10-5	13-2	16-1	18-8	6-4	9-4	11-9	14-5	16-8
	Douglas Fir-Larch	#2	6-8	9-9	12-4	15-1	17-6	5-11	8-8	11-0	13-6	15-7
	Douglas Fir-Larch	#3	5-0	7-4	9-4	11-5	13-2	4-6	6-7	8-4	10-2	11-10
	Hem-Fir	SS	6-10	10-9	14-2	18-0	21-11	6-10	10-9	13-11	17-0	19-9
	Hem-Fir	#1	6-8	10-2	12-10	15-8	18-2	6-2	9-1	11-6	14-0	16-3
	Hem-Fir	#2	6-4	9-7	12-2	14-10	17-3	5-10	8-7	10-10	13-3	15-5
	Hem-Fir	#3	5-0	7-4	9-4	11-5	13-2	4-6	6-7	8-4	10-2	11-10
	Southern Pine	SS	7-1	11-2	14-8	18-9	22-10	7-1	11-2	14-8	17-11	21-2
	Southern Pine	#1	6-10	10-7	13-5	15-9	18-8	6-4	9-6	12-0	14-1	16-8
	Southern Pine	#2	6-1	9-2	11-7	13-9	16-2	5-5	8-2	10-4	12-3	14-6
	Southern Pine	#3	4-8	6-11	8-9	10-7	12-6	4-2	6-2	7-10	9-6	11-2
	Spruce-Pine-Fir	SS	6-8	10-6	13-10	17-8	20-11	6-8	10-5	13-2	16-1	18-8
	Spruce-Pine-Fir	#1	6-6	9-9	12-4	15-1	17-6	5-11	8-8	11-0	13-6	15-7
	Spruce-Pine-Fir	#2	6-6	9-9	12-4	15-1	17-6	5-11	8-8	11-0	13-6	15-7
	Spruce-Pine-Fir	#3	5-0	7-4	9-4	11-5	13-2	4-6	6-7	8-4	10-2	11-10

For SI: 1 inch = 25.4 mm, 1 foot = 304.8 mm, 1 pound per square foot = 47.9 N/m^2.

Further, Article I, **Section 1.04**, **Subsection (D)**, is hereby amended by the addition of Subsection (19.1), so that each Table shall read as follows:

19.1. The amendment of Tables R502.3.1(1), R502.3.1(2), R502.3.3(1), R502.3.3(2), R502.5(1), R502.5(2), R802.4(1), R802.4(2), R802.5.1(1), R802.5.1(2), R802.5.1(3), and R802.5.1(5), to read as follows:

TABLE R502.3.1(1)
FLOOR JOIST SPANS FOR COMMON LUMBER SPECIES
(Residential sleeping areas, live load = 30 psf, L/Δ = 360)[a]

JOIST SPACING (inches)	SPECIES AND GRADE		DEAD LOAD = 10 psf				DEAD LOAD = 20 psf			
			2 × 6	2 × 8	2 × 10	2 × 12	2 × 6	2 × 8	2 × 10	2 × 12
			Maximum floor joist spans							
			(ft - in.)	(ft - in.)	(ft - in.)	(ft - in.)	(ft - in.)	(ft - in.)	(ft - in.)	(ft - in.)
12	Douglas fir-larch	SS	12-6	16-6	21-0	25-7	12-6	16-6	21-0	25-7
	Douglas fir-larch	#1	12-0	15-10	20-3	24-8	12-0	15-7	19-0	22-0
	Douglas fir-larch	#2	11-10	15-7	19-10	23-0	11-6	14-7	17-9	20-7
	Douglas fir-larch	#3	9-8	12-4	15-0	17-5	8-8	11-0	13-5	15-7
	Hem-fir	SS	11-10	15-7	19-10	24-2	11-10	15-7	19-10	24-2
	Hem-fir	#1	11-7	15-3	19-5	23-7	11-7	15-2	18-6	21-6
	Hem-fir	#2	11-0	14-6	18-6	22-6	11-0	14-4	17-6	20-4
	Hem-fir	#3	9-8	12-4	15-0	17-5	8-8	11-0	13-5	15-7
	Southern pine	SS	12-3	16-2	20-8	25-1	12-3	16-2	20-8	25-1
	Southern pine	#1	11-10	15-7	19-10	24-2	11-10	15-7	18-7	22-0
	Southern pine	#2	11-3	14-11	18-1	21-4	10-9	13-8	16-2	19-1
	Southern pine	#3	9-2	11-6	14-0	16-6	8-2	10-3	12-6	14-9
	Spruce-pine-fir	SS	11-7	15-3	19-5	23-7	11-7	15-3	19-5	23-7
	Spruce-pine-fir	#1	11-3	14-11	19-0	23-0	11-3	14-7	17-9	20-7
	Spruce-pine-fir	#2	11-3	14-11	19-0	23-0	11-3	14-7	17-9	20-7
	Spruce-pine-fir	#3	9-8	12-4	15-0	17-5	8-8	11-0	13-5	15-7
16	Douglas fir-larch	SS	11-4	15-0	19-1	23-3	11-4	15-0	19-1	23-0
	Douglas fir-larch	#1	10-11	14-5	18-5	21-4	10-8	13-6	16-5	19-1
	Douglas fir-larch	#2	10-9	14-1	17-2	19-11	9-11	12-7	15-5	17-10
	Douglas fir-larch	#3	8-5	10-8	13-0	15-1	7-6	9-6	11-8	13-6
	Hem-fir	SS	10-9	14-2	18-0	21-11	10-9	14-2	18-0	21-11
	Hem-fir	#1	10-6	13-10	17-8	20-9	10-4	13-1	16-0	18-7
	Hem-fir	#2	10-0	13-2	16-10	19-8	9-10	12-5	15-2	17-7
	Hem-fir	#3	8-5	10-8	13-0	15-1	7-6	9-6	11-8	13-6
	Southern pine	SS	11-2	14-8	18-9	22-10	11-2	14-8	18-9	22-10
	Southern pine	#1	10-9	14-2	18-0	21-4	10-9	13-9	16-1	19-1
	Southern pine	#2	10-3	13-3	15-8	18-6	9-4	11-10	14-0	16-6
	Southern pine	#3	7-11	10-10	12-1	14-4	7-1	8-11	10-10	12-10
	Spruce-pine-fir	SS	10-6	13-10	17-8	21-6	10-6	13-10	17-8	21-4
	Spruce-pine-fir	#1	10-3	13-6	17-2	19-11	9-11	12-7	15-5	17-10
	Spruce-pine-fir	#2	10-3	13-6	17-2	19-11	9-11	12-7	15-5	17-10
	Spruce-pine-fir	#3	8-5	10-8	13-0	15-1	7-6	9-6	11-8	13-6
19.2	Douglas fir-larch	SS	10-8	14-1	18-0	21-10	10-8	14-1	18-0	21-0
	Douglas fir-larch	#1	10-4	13-7	16-9	19-6	9-8	12-4	15-0	17-5
	Douglas fir-larch	#2	10-1	12-10	15-8	18-3	9-1	11-6	14-1	16-3
	Douglas fir-larch	#3	7-8	9-9	11-10	13-9	6-10	8-8	10-7	12-4
	Hem-fir	SS	10-1	13-4	17-0	20-8	10-1	13-4	17-0	20-7
	Hem-fir	#1	9-10	13-0	16-4	19-0	9-6	12-0	14-8	17-0
	Hem-fir	#2	9-5	12-5	15-6	17-1	8-11	11-4	13-10	16-1
	Hem-fir	#3	7-8	9-9	11-10	13-9	6-10	8-8	10-7	12-4
	Southern pine	SS	10-6	13-10	17-8	21-6	10-6	13-10	17-8	21-6
	Southern pine	#1	10-1	13-4	16-5	19-6	9-11	12-7	14-8	17-5
	Southern pine	#2	9-6	12-1	14-4	16-10	8-6	10-10	12-10	15-1
	Southern pine	#3	7-3	9-1	11-0	13-1	6-5	8-2	9-10	11-8
	Spruce-pine-fir	SS	9-10	13-0	16-7	20-2	9-10	13-0	16-7	19-6
	Spruce-pine-fir	#1	9-8	12-9	15-8	18-3	9-1	11-6	14-1	16-3
	Spruce-pine-fir	#2	9-8	12-9	15-8	18-3	9-1	11-6	14-1	16-3
	Spruce-pine-fir	#3	7-8	9-9	11-10	13-9	6-10	8-8	10-7	12-4
24	Douglas fir-larch	SS	9-11	13-1	16-8	20-3	9-11	13-1	16-2	18-9
	Douglas fir-larch	#1	9-7	12-4	15-0	17-5	8-8	11-0	13-5	15-7
	Douglas fir-larch	#2	9-1	11-6	14-1	16-3	8-1	10-3	12-7	14-7
	Douglas fir-larch	#3	6-10	8-8	10-7	12-4	6-2	7-9	9-6	11-0
	Hem-fir	SS	9-4	12-4	15-9	19-2	9-4	12-4	15-9	18-5
	Hem-fir	#1	9-2	12-0	14-8	17-0	8-6	10-9	13-1	15-2
	Hem-fir	#2	8-9	11-4	13-10	16-1	8-0	10-2	12-5	14-4
	Hem-fir	#3	6-10	8-8	10-7	12-4	6-2	7-9	9-6	11-0
	Southern pine	SS	9-9	12-10	16-5	19-11	9-9	12-10	16-5	19-8
	Southern pine	#1	9-4	12-4	14-8	17-5	8-10	11-3	13-1	15-7
	Southern pine	#2	8-6	10-10	12-10	15-1	7-7	9-8	11-5	13-6
	Southern pine	#3	6-5	8-2	9-10	11-8	5-9	7-3	8-10	10-5
	Spruce-pine-fir	SS	9-2	12-1	15-5	18-9	9-2	12-1	15-0	17-5
	Spruce-pine-fir	#1	8-11	11-6	14-1	16-3	8-1	10-3	12-7	14-7
	Spruce-pine-fir	#2	8-11	11-6	14-1	16-3	8-1	10-3	12-7	14-7
	Spruce-pine-fir	#3	6-10	8-8	10-7	12-4	6-2	7-9	9-6	11-0

For SI: 1 inch = 25.4 mm, 1 foot = 304.8 mm, 1 pound per square foot = 0.0479 kPa.

Note: Check sources for availability of lumber in lengths greater than 20 feet.

a. Dead load limits for townhouses in Seismic Design Category C and all structures in Seismic Design Categories D_0, D_1 and D_2 shall be determined in accordance with Section R301.2.2.2.1. (22)

TABLE R502.3.1(2)
FLOOR JOIST SPANS FOR COMMON LUMBER SPECIES
(Residential living areas, live load = 40 psf, L/Δ = 360)[b]

JOIST SPACING (inches)	SPECIES AND GRADE		DEAD LOAD = 10 psf				DEAD LOAD = 20 psf			
			2 × 6	2 × 8	2 × 10	2 × 12	2 × 6	2 × 8	2 × 10	2 × 12
			Maximum floor joist spans							
			(ft - in.)	(ft - in.)	(ft - in.)	(ft - in.)	(ft - in.)	(ft - in.)	(ft - in.)	(ft - in.)
12	Douglas fir-larch	SS	11-4	15-0	19-1	23-3	11-4	15-0	19-1	23-3
	Douglas fir-larch	#1	10-11	14-5	18-5	22-0	10-11	14-2	17-4	20-1
	Douglas fir-larch	#2	10-9	14-2	17-9	20-7	10-6	13-3	16-3	18-10
	Douglas fir-larch	#3	8-8	11-0	13-5	15-7	7-11	10-0	12-3	14-3
	Hem-fir	SS	10-9	14-2	18-0	21-11	10-9	14-2	18-0	21-11
	Hem-fir	#1	10-6	13-10	17-8	21-6	10-6	13-10	16-11	19-7
	Hem-fir	#2	10-0	13-2	16-10	20-4	10-0	13-1	16-0	18-6
	Hem-fir	#3	8-8	11-0	13-5	15-7	7-11	10-0	12-3	14-3
	Southern pine	SS	11-2	14-8	18-9	22-10	11-2	14-8	18-9	22-10
	Southern pine	#1	10-9	14-2	18-0	21-11	10-9	14-2	16-11	20-1
	Southern pine	#2	10-3	13-6	16-2	19-1	9-10	12-6	14-9	17-5
	Southern pine	#3	8-2	10-3	12-6	14-9	7-5	9-5	11-5	13-6
	Spruce-pine-fir	SS	10-6	13-10	17-8	21-6	10-6	13-10	17-8	21-6
	Spruce-pine-fir	#1	10-3	13-6	17-3	20-7	10-3	13-3	16-3	18-10
	Spruce-pine-fir	#2	10-3	13-6	17-3	20-7	10-3	13-3	16-3	18-10
	Spruce-pine-fir	#3	8-8	11-0	13-5	15-7	7-11	10-0	12-3	14-3
16	Douglas fir-larch	SS	10-4	13-7	17-4	21-1	10-4	13-7	17-4	21-0
	Douglas fir-larch	#1	9-11	13-1	16-5	19-1	9-8	12-4	15-0	17-5
	Douglas fir-larch	#2	9-9	12-7	15-5	17-10	9-1	11-6	14-1	16-3
	Douglas fir-larch	#3	7-6	9-6	11-8	13-6	6-10	8-8	10-7	12-4
	Hem-fir	SS	9-9	12-10	16-5	19-11	9-9	12-10	16-5	19-11
	Hem-fir	#1	9-6	12-7	16-0	18-7	9-6	12-0	14-8	17-0
	Hem-fir	#2	9-1	12-0	15-2	17-7	8-11	11-4	13-10	16-1
	Hem-fir	#3	7-6	9-6	11-8	13-6	6-10	8-8	10-7	12-4
	Southern pine	SS	10-2	13-4	17-0	20-9	10-2	13-4	17-0	20-9
	Southern pine	#1	9-9	12-10	16-1	19-1	9-9	12-7	14-8	17-5
	Southern pine	#2	9-4	11-10	14-0	16-6	8-6	10-10	12-10	15-1
	Southern pine	#3	7-1	8-11	10-10	12-10	6-5	8-2	9-10	11-8
	Spruce-pine-fir	SS	9-6	12-7	16-0	19-6	9-6	12-7	16-0	19-6
	Spruce-pine-fir	#1	9-4	12-3	15-5	17-10	9-1	11-6	14-1	16-3
	Spruce-pine-fir	#2	9-4	12-3	15-5	17-10	9-1	11-6	14-1	16-3
	Spruce-pine-fir	#3	7-6	9-6	11-8	13-6	6-10	8-8	10-7	12-4
19.2	Douglas fir-larch	SS	9-8	12-10	16-4	19-10	9-8	12-10	16-4	19-2
	Douglas fir-larch	#1	9-4	12-4	15-0	17-5	8-10	11-3	13-8	15-11
	Douglas fir-larch	#2	9-1	11-6	14-1	16-3	8-3	10-6	12-10	14-10
	Douglas fir-larch	#3	6-10	8-8	10-7	12-4	6-3	7-11	9-8	11-3
	Hem-fir	SS	9-2	12-1	15-5	18-9	9-2	12-1	15-5	18-9
	Hem-fir	#1	9-0	11-10	14-8	17-0	8-8	10-11	13-4	15-6
	Hem-fir	#2	8-7	11-3	13-10	16-1	8-2	10-4	12-8	14-8
	Hem-fir	#3	6-10	8-8	10-7	12-4	6-3	7-11	9-8	11-3
	Southern pine	SS	9-6	12-7	16-0	19-6	9-6	12-7	16-0	19-6
	Southern pine	#1	9-2	12-1	14-8	17-5	9-0	11-5	13-5	15-11
	Southern pine	#2	8-6	10-10	12-10	15-1	7-9	9-10	11-8	13-9
	Southern pine	#3	6-5	8-2	9-10	11-8	5-11	7-5	9-0	10-8
	Spruce-pine-fir	SS	9-0	11-10	15-1	18-4	9-0	11-10	15-1	17-9
	Spruce-pine-fir	#	8-9	11-6	14-1	16-3	8-3	10-6	12-10	14-10
	Spruce-pine-fir	#2	8-9	11-6	14-1	16-3	8-3	10-6	12-10	14-10
	Spruce-pine-fir	#3	6-10	8-8	10-7	12-4	6-3	7-11	9-8	11-3
24	Douglas fir-larch	SS	9-0	11-11	15-2	18-5	9-0	11-11	14-9	17-1
	Douglas fir-larch	#1	8-8	11-0	13-5	15-7	7-11	10-0	12-3	14-3
	Douglas fir-larch	#2	8-1	10-3	12-7	14-7	7-5	9-5	11-6	13-4
	Douglas fir-larch	#3	6-2	7-9	9-6	11-0	5-7	7-1	8-8	10-1
	Hem-fir	SS	8-6	11-3	14-4	17-5	8-6	11-3	14-4	16-10[a]
	Hem-fir	#1	8-4	10-9	13-1	15-2	7-9	9-9	11-11	13-10
	Hem-fir	#2	7-11	10-2	12-5	14-4	7-4	9-3	11-4	13-1
	Hem-fir	#3	6-2	7-9	9-6	11-0	5-7	7-1	8-8	10-1
	Southern pine	SS	8-10	11-8	14-11	18-1	8-10	11-8	14-11	18-0
	Southern pine	#1	8-6	11-3	13-1	15-7	8-1	10-3	12-0	14-3
	Southern pine	#2	7-7	9-8	11-5	13-6	7-0	8-10	10-5	12-4
	Southern pine	#3	5-9	7-3	8-10	10-5	5-3	6-8	8-1	9-6
	Spruce-pine-fir	SS	8-4	11-0	14-0	17-0	8-4	11-0	13-8	15-11
	Spruce-pine-fir	#1	8-1	10-3	12-7	14-7	7-5	9-5	11-6	13-4
	Spruce-pine-fir	#2	8-1	10-3	12-7	14-7	7-5	9-5	11-6	13-4
	Spruce-pine-fir	#3	6-2	7-9	9-6	11-0	5-7	7-1	8-8	10-1

For SI: 1 inch = 25.4 mm, 1 foot = 304.8 mm, 1 pound per square foot = 0.0479 kPa.

Note: Check sources for availability of lumber in lengths greater than 20 feet.

a. End bearing length shall be increased to 2 inches.

b. Dead load limits for townhouses in Seismic Design Category C and all structures in Seismic Design Categories D_0, D_1, and D_2 shall be determined in accordance with Section R301.2.2.2.1.

TABLE R502.3.3(1)
CANTILEVER SPANS FOR FLOOR JOISTS SUPPORTING LIGHT-FRAME EXTERIOR BEARING WALL AND ROOF ONLY[a, b, c, f, g, h]
(Floor Live Load ≤ 40 psf, Roof Live Load ≤ 20 psf)

Member & Spacing	Maximum Cantilever Span (Uplift Force at Backspan Support in Lbs.)[d, e]											
	Ground Snow Load											
	≤ 20 psf			30 psf			50 psf			70 psf		
	Roof Width			Roof Width			Roof Width			Roof Width		
	24 ft	32 ft	40 ft	24 ft	32 ft	40 ft	24 ft	32 ft	40 ft	24 ft	32 ft	40 ft
2 × 8 @ 12″	20″ (177)	15″ (227)	—	18″ (209)	—	—	—	—	—	—	—	—
2 × 10 @ 16″	29″ (228)	21″ (297)	16″ (364)	26″ (271)	18″ (354)	—	20″ (375)	—	—	—	—	—
2 × 10 @ 12″	36″ (166)	26″ (219)	20″ (270)	34″ (198)	22″ (263)	16″ (324)	26″ (277)	—	—	19″ (356)	—	—
2 × 12 @ 16″	—	32″ (287)	25″ (356)	36″ (263)	29″ (345)	21″ (428)	29″ (367)	20″ (484)	—	23″ (471)	—	—
2 × 12 @ 12″	—	42″ (209)	31″ (263)	—	37″ (253)	27″ (317)	36″ (271)	27″ (358)	17″ (447)	31″ (348)	19″ (462)	—
2 × 12 @ 8″	—	48″ (136)	45″ (169)	—	48″ (164)	38″ (206)	—	40″ (233)	26″ (294)	36″ (230)	29″ (304)	18″ (379)

For SI: 1 inch = 25.4 mm, 1 foot = 304.8 mm, 1 pound per square foot = 0.0479 kPa.

a. Tabulated values are for clear-span roof supported solely by exterior bearing walls.
b. Spans are based on minimum design properties for No. 2 Grade lumber of Douglas fir-larch, hem-fir, and spruce-pine-fir for repetitive (three or more) members. No. 1 or better grade lumber shall be used for southern pine.
c. Ratio of backspan to cantilever span shall be at least 3:1.
d. Connections capable of resisting the indicated uplift force shall be provided at the backspan support.
e. Uplift force is for a backspan to cantilever span ratio of 3:1. Tabulated uplift values are permitted to be reduced by multiplying by a factor equal to 3 divided by the actual backspan ratio provided (3/backspan ratio).
f. See Section R301.2.2.2.5, Item 1, for additional limitations on cantilevered floor joists for detached one- and two-family dwellings in Seismic Design Category D_0, D_1, or D_2 and townhouses in Seismic Design Category C, D_0, D_1 or D_2.
g. A full-depth rim joist shall be provided at the unsupported end of the cantilever joists. Solid blocking shall be provided at the supported end.
h. Linear interpolation shall be permitted for building widths and ground snow loads other than shown.

TABLE R502.3.3(2)
CANTILEVER SPANS FOR FLOOR JOISTS SUPPORTING EXTERIOR BALCONY[a, b, e, f]

Member Size	Spacing	Maximum Cantilever Span (Uplift Force at Backspan Support in lb)[c, d]		
		Ground Snow Load		
		≤ 30 psf	50 psf	70 psf
2 × 8	12″	42″ (139)	39″ (156)	34″ (165)
2 × 8	16″	36″ (151)	34″ (171)	29″ (180)
2 × 10	12″	61″ (164)	57″ (189)	49″ (201)
2 × 10	16″	53″ (180)	49″ (208)	42″ (220)
2 × 10	24″	43″ (212)	40″ (241)	34″ (255)
2 × 12	16″	72″ (228)	67″ (260)	57″ (268)
2 × 12	24″	58″ (279)	54″ (319)	47″ (330)

For SI: 1 inch = 25.4 mm, 1 pound per square foot = 0.0479 kPa.

a. Spans are based on minimum design properties for No. 2 Grade lumber of Douglas fir-larch, hem-fir, and spruce-pine-fir for repetitive (three or more) members. No. 1 or better grade lumber shall be used for southern pine.
b. Ratio of backspan to cantilever span shall be at least 2:1.
c. Connections capable of resisting the indicated uplift force shall be provided at the backspan support.
d. Uplift force is for a backspan to cantilever span ratio of 2:1. Tabulated uplift values are permitted to be reduced by multiplying by a factor equal to 2 divided by the actual backspan ratio provided (2/backspan ratio).
e. A full-depth rim joist shall be provided at the unsupported end of the cantilever joists. Solid blocking shall be provided at the supported end.
f. Linear interpolation shall be permitted for ground snow loads other than shown.

TABLE R502.5(1)
GIRDER SPANS[a,b] AND HEADER SPANS[a,b] FOR EXTERIOR BEARING WALLS
(Maximum spans for Douglas fir-larch, hem-fir, southern pine and spruce-pine-fir[b] and required number of jack studs)

GIRDERS AND HEADERS SUPPORTING	SIZE	GROUND SNOW LOAD (psf)[e]																	
		30						50						70					
		Building width[c] (feet)																	
		20		28		36		20		28		36		20		28		36	
		Span	NJ[d]	Span	NJ[d]	Span	NJ[d]	Span	NJ[d]	Span	NJ[d]	Span	NJ[d]	Span	NJ[d]	Span	NJ[d]	Span	NJ[d]
Roof and ceiling	2-2 × 4	3-6	1	3-2	1	2-10	1	3-2	1	2-9	1	2-6	1	2-10	1	2-6	1	2-3	1
	2-2 × 6	5-5	1	4-8	1	4-2	1	4-8	1	4-1	1	3-8	2	4-2	1	3-8	2	3-3	2
	2-2 × 8	6-10	1	5-11	2	5-4	2	5-11	2	5-2	2	4-7	2	5-4	2	4-7	2	4-1	2
	2-2 × 10	8-5	2	7-3	2	6-6	2	7-3	2	6-3	2	5-7	2	6-6	2	5-7	2	5-0	2
	2-2 × 12	9-9	2	8-5	2	7-6	2	8-5	2	7-3	2	6-6	2	7-6	2	6-6	2	5-10	3
	3-2 × 8	8-4	1	7-5	1	6-8	1	7-5	1	6-5	2	5-9	2	6-8	1	5-9	2	5-2	2
	3-2 × 10	10-6	1	9-1	2	8-2	2	9-1	2	7-10	2	7-0	2	8-2	2	7-0	2	6-4	2
	3-2 × 12	12-2	2	10-7	2	9-5	2	10-7	2	9-2	2	8-2	2	9-5	2	8-2	2	7-4	2
	4-2 × 8	9-2	1	8-4	1	7-8	1	8-4	1	7-5	1	6-8	1	7-8	1	6-8	1	5-11	2
	4-2 × 10	11-8	1	10-6	1	9-5	2	10-6	1	9-1	2	8-2	2	9-5	2	8-2	2	7-3	2
	4-2 × 12	14-1	1	12-2	2	10-11	2	12-2	2	10-7	2	9-5	2	10-11	2	9-5	2	8-5	2
Roof, ceiling and one center-bearing floor	2-2 × 4	3-1	1	2-9	1	2-5	1	2-9	1	2-5	1	2-2	1	2-7	1	2-3	1	2-0	1
	2-2 × 6	4-6	1	4-0	1	3-7	2	4-1	1	3-7	2	3-3	2	3-9	2	3-3	2	2-11	2
	2-2 × 8	5-9	2	5-0	2	4-6	2	5-2	2	4-6	2	4-1	2	4-9	2	4-2	2	3-9	2
	2-2 × 10	7-0	2	6-2	2	5-6	2	6-4	2	5-6	2	5-0	2	5-9	2	5-1	2	4-7	3
	2-2 × 12	8-1	2	7-1	2	6-5	2	7-4	2	6-5	2	5-9	3	6-8	2	5-10	3	5-3	3
	3-2 × 8	7-2	1	6-3	2	5-8	2	6-5	2	5-8	2	5-1	2	5-11	2	5-2	2	4-8	2
	3-2 × 10	8-9	2	7-8	2	6-11	2	7-11	2	6-11	2	6-3	2	7-3	2	6-4	2	5-8	2
	3-2 × 12	10-2	2	8-11	2	8-0	2	9-2	2	8-0	2	7-3	2	8-5	2	7-4	2	6-7	2
	4-2 × 8	8-1	1	7-3	1	6-7	1	7-5	1	6-6	1	5-11	2	6-10	1	6-0	2	5-5	2
	4-2 × 10	10-1	1	8-10	2	8-0	2	9-1	2	8-0	2	7-2	2	8-4	2	7-4	2	6-7	2
	4-2 × 12	11-9	2	10-3	2	9-3	2	10-7	2	9-3	2	8-4	2	9-8	2	8-6	2	7-7	2
Roof, ceiling and one clear span floor	2-2 × 4	2-8	1	2-4	1	2-1	1	2-7	1	2-3	1	2-0	1	2-5	1	2-1	1	1-10	1
	2-2 × 6	3-11	1	3-5	2	3-0	2	3-10	2	3-4	2	3-0	2	3-6	2	3-1	2	2-9	2
	2-2 × 8	5-0	2	4-4	2	3-10	2	4-10	2	4-2	2	3-9	2	4-6	2	3-11	2	3-6	2
	2-2 × 10	6-1	2	5-3	2	4-8	2	5-11	2	5-1	2	4-7	3	5-6	2	4-9	2	4-3	3
	2-2 × 12	7-1	2	6-1	3	5-5	3	6-10	2	5-11	3	5-4	3	6-4	2	5-6	3	5-0	3
	3-2 × 8	6-3	2	5-5	2	4-10	2	6-1	2	5-3	2	4-8	2	5-7	2	4-11	2	4-5	2
	3-2 × 10	7-7	2	6-7	2	5-11	2	7-5	2	6-5	2	5-9	2	6-10	2	6-0	2	5-4	2
	3-2 × 12	8-10	2	7-8	2	6-10	2	8-7	2	7-5	2	6-8	2	7-11	2	6-11	2	6-3	2
	4-2 × 8	7-2	1	6-3	2	5-7	2	7-0	1	6-1	2	5-5	2	6-6	1	5-8	2	5-1	2
	4-2 × 10	8-9	2	7-7	2	6-10	2	8-7	2	7-5	2	6-7	2	7-11	2	6-11	2	6-2	2
	4-2 × 12	10-2	2	8-10	2	7-11	2	9-11	2	8-7	2	7-8	2	9-2	2	8-0	2	7-2	2
Roof, ceiling and two center-bearing floors	2-2 × 4	2-7	1	2-3	1	2-0	1	2-6	1	2-2	1	1-11	1	2-4	1	2-0	1	1-9	1
	2-2 × 6	3-9	2	3-3	2	2-11	2	3-8	2	3-2	2	2-10	2	3-5	2	3-0	2	2-8	2
	2-2 × 8	4-9	2	4-2	2	3-9	2	4-7	2	4-0	2	3-8	2	4-4	2	3-9	2	3-5	2
	2-2 × 10	5-9	2	5-1	2	4-7	3	5-8	2	4-11	2	4-5	3	5-3	2	4-7	3	4-2	3
	2-2 × 12	6-8	2	5-10	3	5-3	3	6-6	2	5-9	3	5-2	3	6-1	3	5-4	3	4-10	3
	3-2 × 8	5-11	2	5-2	2	4-8	2	5-9	2	5-1	2	4-7	2	5-5	2	4-9	2	4-3	2
	3-2 × 10	7-3	2	6-4	2	5-8	2	7-1	2	6-2	2	5-7	2	6-7	2	5-9	2	5-3	2
	3-2 × 12	8-5	2	7-4	2	6-7	2	8-2	2	7-2	2	6-5	3	7-8	2	6-9	2	6-1	3
	4-2 × 8	6-10	1	6-0	2	5-5	2	6-8	1	5-10	2	5-3	2	6-3	2	5-6	2	4-11	2
	4-2 × 10	8-4	2	7-4	2	6-7	2	8-2	2	7-2	2	6-5	2	7-7	2	6-8	2	6-0	2
	4-2 × 12	9-8	2	8-6	2	7-8	2	9-5	2	8-3	2	7-5	2	8-10	2	7-9	2	7-0	2

(continued)

TABLE R502.5(1)—continued
GIRDER SPANS[a,b] AND HEADER SPANS[a,b] FOR EXTERIOR BEARING WALLS
(Maximum spans for Douglas fir-larch, hem-fir, southern pine and spruce-pine-fir[b] and required number of jack studs)

GIRDERS AND HEADERS SUPPORTING	SIZE	GROUND SNOW LOAD (psf)[e]																	
		30						50						70					
		Building width[c] (feet)																	
		20		28		36		20		28		36		20		28		36	
		Span	NJ[d]	Span	NJ[d]	Span	NJ[d]	Span	NJ[d]	Span	NJ[d]	Span	NJ[d]	Span	NJ[d]	Span	NJ[d]	Span	NJ[d]
Roof, ceiling, and two clear span floors	2-2 × 4	2-1	1	1-8	1	1-6	2	2-0	1	1-8	1	1-5	2	2-0	1	1-8	1	1-5	2
	2-2 × 6	3-1	2	2-8	2	2-4	2	3-0	2	2-7	2	2-3	2	2-11	2	2-7	2	2-3	2
	2-2 × 8	3-10	2	3-4	2	3-0	3	3-10	2	3-4	2	2-11	3	3-9	2	3-3	2	2-11	3
	2-2 × 10	4-9	2	4-1	3	3-8	3	4-8	2	4-0	3	3-7	3	4-7	3	4-0	3	3-6	3
	2-2 × 12	5-6	3	4-9	3	4-3	3	5-5	3	4-8	3	4-2	3	5-4	3	4-7	3	4-1	4
	3-2 × 8	4-10	2	4-2	2	3-9	2	4-9	2	4-1	2	3-8	2	4-8	2	4-1	2	3-8	2
	3-2 × 10	5-11	2	5-1	2	4-7	3	5-10	2	5-0	2	4-6	3	5-9	2	4-11	2	4-5	3
	3-2 × 12	6-10	2	5-11	3	5-4	3	6-9	2	5-10	3	5-3	3	6-8	2	5-9	3	5-2	3
	4-2 × 8	5-7	2	4-10	2	4-4	2	5-6	2	4-9	2	4-3	2	5-5	2	4-8	2	4-2	2
	4-2 × 10	6-10	2	5-11	2	5-3	2	6-9	2	5-10	2	5-2	2	6-7	2	5-9	2	5-1	2
	4-2 × 12	7-11	2	6-10	2	6-2	3	7-9	2	6-9	2	6-0	3	7-8	2	6-8	2	5-11	3

For SI:1 inch = 25.4 mm, 1 pound per square foot = 0.0479 kPa.

a. Spans are given in feet and inches.

b. Spans are based on minimum design properties for No. 2 Grade lumber of Douglas fir-larch, hem-fir, and spruce-pine-fir. No. 1 or better grade lumber shall be used for southern pine.

c. Building width is measured perpendicular to the ridge. For widths between those shown, spans are permitted to be interpolated.

d. NJ - Number of jack studs required to support each end. Where the number of required jack studs equals one, the header is permitted to be supported by an approved framing anchor attached to the full-height wall stud and to the header.

e. Use 30 psf ground snow load for cases in which ground snow load is less than 30 psf and the roof live load is equal to or less than 20 psf.

TABLE R502.5(2)
GIRDER SPANS[a,b] AND HEADER SPANS[a,b] FOR INTERIOR BEARING WALLS
(Maximum spans for Douglas fir-larch, hem-fir, southern pine and spruce-pine-fir[b] and required number of jack studs)

HEADERS AND GIRDERS SUPPORTING	SIZE	BUILDING Width[c] (feet)					
		20		28		36	
		Span	NJ[d]	Span	NJ[d]	Span	NJ[d]
One floor only	2-2 × 4	3-1	1	2-8	1	2-5	1
	2-2 × 6	4-6	1	3-11	1	3-6	1
	2-2 × 8	5-9	1	5-0	2	4-5	2
	2-2 × 10	7-0	2	6-1	2	5-5	2
	2-2 × 12	8-1	2	7-0	2	6-3	2
	3-2 × 8	7-2	1	6-3	1	5-7	2
	3-2 × 10	8-9	1	7-7	2	6-9	2
	3-2 × 12	10-2	2	8-10	2	7-10	2
	4-2 × 8	9-0	1	7-8	1	6-9	1
	4-2 × 10	10-1	1	8-9	1	7-10	2
	4-2 × 12	11-9	1	10-2	2	9-1	2
Two floors	2-2 × 4	2-2	1	1-10	1	1-7	1
	2-2 × 6	3-2	2	2-9	2	2-5	2
	2-2 × 8	4-1	2	3-6	2	3-2	2
	2-2 × 10	4-11	2	4-3	2	3-10	3
	2-2 × 12	5-9	2	5-0	3	4-5	3
	3-2 × 8	5-1	2	4-5	2	3-11	2
	3-2 × 10	6-2	2	5-4	2	4-10	2
	3-2 × 12	7-2	2	6-3	2	5-7	3
	4-2 × 8	6-1	1	5-3	2	4-8	2
	4-2 × 10	7-2	2	6-2	2	5-6	2
	4-2 × 12	8-4	2	7-2	2	6-5	2

For SI: 1 inch = 25.4 mm, 1 foot = 304.8 mm.

a. Spans are given in feet and inches.

b. Spans are based on minimum design properties for No. 2 Grade lumber of Douglas fir-larch, hem-fir, and spruce-pine-fir. No. 1 or better grade lumber shall be used for southern pine.

c. Building width is measured perpendicular to the ridge. For widths between those shown, spans are permitted to be interpolated.

d. NJ - Number of jack studs required to support each end. Where the number of required jack studs equals one, the header is permitted to be supported by an approved framing anchor attached to the full-height wall stud and to the header.

TABLE R802.4(1)
CEILING JOIST SPANS FOR COMMON LUMBER SPECIES
(Uninhabitable attics without storage, live load = 10 psf, L/Δ = 240)

CEILING JOIST SPACING (inches)	SPECIES AND GRADE		DEAD LOAD = 5 psf			
			2 × 4	2 × 6	2 × 8	2 × 10
			Maximum ceiling joist spans			
			(feet - inches)	(feet - inches)	(feet - inches)	(feet - inches)
12	Douglas fir-larch	SS	13-2	20-8	Note a	Note a
	Douglas fir-larch	#1	12-8	19-11	Note a	Note a
	Douglas fir-larch	#2	12-5	19-6	25-8	Note a
	Douglas fir-larch	#3	10-10	15-10	20-1	24-6
	Hem-fir	SS	12-5	19-6	25-8	Note a
	Hem-fir	#1	12-2	19-1	25-2	Note a
	Hem-fir	#2	11-7	18-2	24-0	Note a
	Hem-fir	#3	10-10	15-10	20-1	24-6
	Southern pine	SS	12-11	20-3	Note a	Note a
	Southern pine	#1	12-5	19-6	25-8	Note a
	Southern pine	#2	11-10	18-8	24-7	Note a
	Southern pine	#3	10-1	14-11	18-9	22-9
	Spruce-pine-fir	SS	12-2	19-1	25-2	Note a
	Spruce-pine-fir	#1	11-10	18-8	24-7	Note a
	Spruce-pine-fir	#2	11-10	18-8	24-7	Note a
	Spruce-pine-fir	#3	10-10	15-10	20-1	24-6
16	Douglas fir-larch	SS	11-11	18-9	24-8	Note a
	Douglas fir-larch	#1	11-6	18-1	23-10	Note a
	Douglas fir-larch	#2	11-3	17-8	23-0	Note a
	Douglas fir-larch	#3	9-5	13-9	17-5	21-3
	Hem-fir	SS	11-3	17-8	23-4	Note a
	Hem-fir	#1	11-0	17-4	22-10	Note a
	Hem-fir	#2	10-6	16-6	21-9	Note a
	Hem-fir	#3	9-5	13-9	17-5	21-3
	Southern pine	SS	11-9	18-5	24-3	Note a
	Southern pine	#1	11-3	17-8	23-4	Note a
	Southern pine	#2	10-9	16-11	21-7	25-7
	Southern pine	#3	8-9	12-11	16-3	19-9
	Spruce-pine-fir	SS	11-0	17-4	22-10	Note a
	Spruce-pine-fir	#1	10-9	16-11	22-4	Note a
	Spruce-pine-fir	#2	10-9	16-11	22-4	Note a
	Spruce-pine-fir	#3	9-5	13-9	17-5	21-3
19.2	Douglas fir-larch	SS	11-3	17-8	23-3	Note a
	Douglas fir-larch	#1	10-10	17-0	22-5	Note a
	Douglas fir-larch	#2	10-7	16-7	21-0	25-8
	Douglas fir-larch	#3	8-7	12-6	15-10	19-5
	Hem-fir	SS	10-7	16-8	21-11	Note a
	Hem-fir	#1	10-4	16-4	21-6	Note a
	Hem-fir	#2	9-11	15-7	20-6	25-3
	Hem-fir	#3	8-7	12-6	15-10	19-5
	Southern -pine	SS	11-0	17-4	22-10	Note a
	Southern pine	#1	10-7	16-8	22-0	Note a
	Southern pine	#2	10-2	15-7	19-8	23-5
	Southern pine	#3	8-0	11-9	14-10	18-0
	Spruce-pine-fir	SS	10-4	16-4	21-6	Note a
	Spruce-pine-fir	#1	10-2	15-11	21-0	25-8
	Spruce-pine-fir	#2	10-2	15-11	21-0	25-8
	Spruce-pine-fir	#3	8-7	12-6	15-10	19-5

(continued)

TABLE R802.4(1)—continued
CEILING JOIST SPANS FOR COMMON LUMBER SPECIES
(Uninhabitable attics without storage, live load = 10 psf, L/Δ = 240)

CEILING JOIST SPACING (inches)	SPECIES AND GRADE		DEAD LOAD = 5 psf			
			2 × 4	2 × 6	2 × 8	2 × 10
			Maximum ceiling joist spans			
			(feet - inches)	(feet - inches)	(feet - inches)	(feet - inches)
24	Douglas fir-larch	SS	10-5	16-4	21-7	Note a
	Douglas fir-larch	#1	10-0	15-9	20-1	24-6
	Douglas fir-larch	#2	9-10	14-10	18-9	22-11
	Douglas fir-larch	#3	7-8	11-2	14-2	17-4
	Hem-fir	SS	9-10	15-6	20-5	Note a
	Hem-fir	#1	9-8	15-2	19-7	23-11
	Hem-fir	#2	9-2	14-5	18-6	22-7
	Hem-fir	#3	7-8	11-2	14-2	17-4
	Southern pine	SS	10-3	16-1	21-2	Note a
	Southern pine	#1	9-10	15-6	20-5	24-0
	Southern pine	#2	9-3	13-11	17-7	20-11
	Southern pine	#3	7-2	10-6	13-3	16-1
	Spruce-pine-fir	SS	9-8	15-2	19-11	25-5
	Spruce-pine-fir	#1	9-5	14-9	18-9	22-11
	Spruce-pine-fir	#2	9-5	14-9	18-9	22-11
	Spruce-pine-fir	#3	7-8	11-2	14-2	17-4

Check sources for availability of lumber in lengths greater than 20 feet.

For SI: 1 inch = 25.4 mm, 1 foot = 304.8 mm, 1 pound per square foot = 0.0479kPa.

a. Span exceeds 26 feet in length.

TABLE R802.4(2)
CEILING JOIST SPANS FOR COMMON LUMBER SPECIES
(Uninhabitable attics with limited storage, live load = 20 psf, L/Δ = 240)

CEILING JOIST SPACING (inches)	SPECIES AND GRADE		DEAD LOAD = 10 psf			
			2 × 4	2 × 6	2 × 8	2 × 10
			Maximum ceiling joist spans			
			(feet - inches)	(feet - inches)	(feet - inches)	(feet - inches)
12	Douglas fir-larch	SS	10-5	16-4	21-7	Note a
	Douglas fir-larch	#1	10-0	15-9	20-1	24-6
	Douglas fir-larch	#2	9-10	14-10	18-9	22-11
	Douglas fir-larch	#3	7-8	11-2	14-2	17-4
	Hem-fir	SS	9-10	15-6	20-5	Note a
	Hem-fir	#1	9-8	15-2	19-7	23-11
	Hem-fir	#2	9-2	14-5	18-6	22-7
	Hem-fir	#3	7-8	11-2	14-2	17-4
	Southern pine	SS	10-3	16-1	21-2	Note a
	Southern pine	#1	9-10	15-6	20-5	24-0
	Southern pine	#2	9-3	13-11	17-7	20-11
	Southern pine	#3	7-2	10-6	13-3	16-1
	Spruce-pine-fir	SS	9-8	15-2	19-11	25-5
	Spruce-pine-fir	#1	9-5	14-9	18-9	22-11
	Spruce-pine-fir	#2	9-5	14-9	18-9	22-11
	Spruce-pine-fir	#3	7-8	11-2	14-2	17-4
16	Douglas fir-larch	SS	9-6	14-11	19-7	25-0
	Douglas fir-larch	#1	9-1	13-9	17-5	21-3
	Douglas fir-larch	#2	8-9	12-10	16-3	19-10
	Douglas fir-larch	#3	6-8	9-8	12-4	15-0
	Hem-fir	SS	8-11	14-1	18-6	23-8
	Hem-fir	#1	8-9	13-5	16-10	20-8
	Hem-fir	#2	8-4	12-8	16-0	19-7
	Hem-fir	#3	6-8	9-8	12-4	15-0
	Southern pine	SS	9-4	14-7	19-3	24-7
	Southern pine	#1	8-11	14-0	17-9	20-9
	Southern pine	#2	8-0	12-0	15-3	18-1
	Southern pine	#3	6-2	9-2	11-6	14-0
	Spruce-pine-fir	SS	8-9	13-9	18-1	23-1
	Spruce-pine-fir	#1	8-7	12-10	16-3	19-10
	Spruce-pine-fir	#2	8-7	12-10	16-3	19-10
	Spruce-pine-fir	#3	6-8	9-8	12-4	15-0
19.2	Douglas fir-larch	SS	8-11	14-0	18-5	23-4
	Douglas fir-larch	#1	8-7	12-6	15-10	19-5
	Douglas fir-larch	#2	8-0	11-9	14-10	18-2
	Douglas fir-larch	#3	6-1	8-10	11-3	13-8
	Hem-fir	SS	8-5	13-3	17-5	22-3
	Hem-fir	#1	8-3	12-3	15-6	18-11
	Hem-fir	#2	7-10	11-7	14-8	17-10
	Hem-fir	#3	6-1	8-10	11-3	13-8
	Southern pine	SS	8-9	13-9	18-2	23-1
	Southern pine	#1	8-5	12-9	16-2	18-11
	Southern pine	#2	7-4	11-0	13-11	16-6
	Southern pine	#3	5-8	8-4	10-6	12-9
	Spruce-pine-fir	SS	8-3	12-11	17-1	21-8
	Spruce-pine-fir	#1	8-0	11-9	14-10	18-2
	Spruce-pine-fir	#2	8-0	11-9	14-10	18-2
	Spruce-pine-fir	#3	6-1	8-10	11-3	13-8

(continued)

TABLE R802.4(2)—continued
CEILING JOIST SPANS FOR COMMON LUMBER SPECIES
(Uninhabitable attics with limited storage, live load = 20 psf, L/Δ = 240)

CEILING JOIST SPACING (inches)	SPECIES AND GRADE		DEAD LOAD = 10 psf			
			2 × 4	2 × 6	2 × 8	2 × 10
			Maximum ceiling joist spans			
			(feet - inches)	(feet - inches)	(feet - inches)	(feet - inches)
24	Douglas fir-larch	SS	8-3	13-0	17-1	20-11
	Douglas fir-larch	#1	7-8	11-2	14-2	17-4
	Douglas fir-larch	#2	7-2	10-6	13-3	16-3
	Douglas fir-larch	#3	5-5	7-11	10-0	12-3
	Hem-fir	SS	7-10	12-3	16-2	20-6
	Hem-fir	#1	7-6	10-11	13-10	16-11
	Hem-fir	#2	7-1	10-4	13-1	16-0
	Hem-fir	#3	5-5	7-11	10-0	12-3
	Southern pine	SS	8-1	12-9	16-10	21-6
	Southern pine	#1	7-8	11-5	14-6	16-11
	Southern pine	#2	6-7	9-10	12-6	14-9
	Southern pine	#3	5-1	7-5	9-5	11-5
	Spruce-pine-fir	SS	7-8	12-0	15-10	19-5
	Spruce-pine-fir	#1	7-2	10-6	13-3	16-3
	Spruce-pine-fir	#2	7-2	10-6	13-3	16-3
	Spruce-pine-fir	#3	5-5	7-11	10-0	12-3

Check sources for availability of lumber in lengths greater than 20 feet.

For SI: 1 inch = 25.4 mm, 1 foot = 304.8 mm, 1 pound per square foot = 0.0479kPa.

a. Span exceeds 26 feet in length.

TABLE R802.5.1(1)
RAFTER SPANS FOR COMMON LUMBER SPECIES
(Roof live load=20 psf, ceiling not attached to rafters, L/Δ = 180)

RAFTER SPACING (inches)	SPECIES AND GRADE		DEAD LOAD = 10 psf					DEAD LOAD = 20 psf				
			2 × 4	2 × 6	2 × 8	2 × 10	2 × 12	2 × 4	2 × 6	2 × 8	2 × 10	2 × 12
			Maximum rafter spans[a]									
			(feet - inches)	(feet - inches)	(feet - inches)	(feet - inches)	(feet - inches)	(feet - inches)	(feet - inches)	(feet - inches)	(feet - inches)	(feet - inches)
12	Douglas fir-larch	SS	11-6	18-0	23-9	Note b	Note b	11-6	18-0	23-5	Note b	Note b
	Douglas fir-larch	#1	11-1	17-4	22-5	Note b	Note b	10-6	15-4	19-5	23-9	Note b
	Douglas fir-larch	#2	10-10	16-7	21-0	25-8	Note b	9-10	14-4	18-2	22-3	25-9
	Douglas fir-larch	#3	8-7	12-6	15-10	19-5	22-6	7-5	10-10	13-9	16-9	19-6
	Hem-fir	SS	10-10	17-0	22-5	Note b	Note b	10-10	17-0	22-5	Note b	Note b
	Hem-fir	#1	10 -7	16-8	21-10	Note b	Note b	10-3	14-11	18-11	23-2	Note b
	Hem-fir	#2	10-1	15-11	20-8	25-3	Note b	9-8	14-2	17-11	21-11	25-5
	Hem-fir	#3	8-7	12-6	15-10	19-5	22-6	7-5	10-10	13-9	16-9	19-6
	Southern pine	SS	11-3	17-8	23-4	Note b	Note b	11-3	17-8	23-4	Note b	Note b
	Southern pine	#1	10-10	17-0	22-5	Note b	Note b	10-6	15-8	19-10	23-2	Note b
	Southern pine	#2	10-4	15-7	19-8	23-5	Note b	9-0	13-6	17-1	20-3	23-10
	Southern pine	#3	8-0	11-9	14-10	18-0	21-4	6-11	10-2	12-10	15-7	18-6
	Spruce-pine-fir	SS	10-7	16-8	21-11	Note b	Note b	10-7	16-8	21-9	Note b	Note b
	Spruce-pine-fir	#1	10-4	16-3	21-0	25-8	Note b	9-10	14-4	18-2	22-3	25-9
	Spruce-pine-fir	#2	10-4	16-3	21-0	25-8	Note b	9-10	14-4	18-2	22-3	25-9
	Spruce-pine-fir	#3	8-7	12-6	15-10	19-5	22-6	7-5	10-10	13-9	16-9	19-6
16	Douglas fir-larch	SS	10-5	16-4	21-7	Note b	Note b	10-5	16-0	20-3	24-9	Note b
	Douglas fir-larch	#1	10-0	15-4	19-5	23-9	Note b	9-1	13-3	16-10	20-7	23-10
	Douglas fir-larch	#2	9-10	14-4	18-2	22-3	25-9	8-6	12-5	15-9	19-3	22-4
	Douglas fir-larch	#3	7-5	10-10	13-9	16-9	19-6	6-5	9-5	11-11	14-6	16-10
	Hem-fir	SS	9-10	15-6	20-5	Note b	Note b	9-10	15-6	19-11	24-4	Note b
	Hem-fir	#1	9-8	14-11	18-11	23-2	Note b	8-10	12-11	16-5	20-0	23-3
	Hem-fir	#2	9-2	14-2	17-11	21-11	25-5	8-5	12-3	15-6	18-11	22-0
	Hem-fir	#3	7-5	10-10	13-9	16-9	19-6	6-5	9-5	11-11	14-6	16-10
	Southern pine	SS	10-3	16-1	21-2	Note b	Note b	10-3	16-1	21-2	25-7	Note b
	Southern pine	#1	9-10	15-6	19-10	23-2	Note b	9-1	13-7	17-2	20-1	23-10
	Southern pine	#2	9-0	13-6	17-1	20-3	23-10	7-9	11-8	14-9	17-6	20-8
	Southern pine	#3	6-11	10-2	12-10	15-7	18-6	6-0	8-10	11-2	13-6	16-0
	Spruce-pine-fir	SS	9-8	15-2	19-11	25-5	Note b	9-8	14-10	18-10	23-0	Note b
	Spruce-pine-fir	#1	9-5	14-4	18-2	22-3	25-9	8-6	12-5	15-9	19-3	22-4
	Spruce-pine-fir	#2	9-5	14-4	18-2	22-3	25-9	8-6	12-5	15-9	19-3	22-4
	Spruce-pine-fir	#3	7-5	10-10	13-9	16-9	19-6	6-5	9-5	11-11	14-6	16-10
19.2	Douglas fir-larch	SS	9-10	15-5	20-4	25-11	Note b	9-10	14-7	18-6	22-7	Note b
	Douglas fir-larch	#1	9-5	14-0	17-9	21-8	25-2	8-4	12-2	15-4	18-9	21-9
	Douglas fir-larch	#2	8-11	13-1	16-7	20-3	23-6	7-9	11-4	14-4	17-7	20-4
	Douglas fir-larch	#3	6-9	9-11	12-7	15-4	17-9	5-10	8-7	10-10	13-3	15-5
	Hem-fir	SS	9-3	14-7	19-2	24-6	Note b	9-3	14-4	18-2	22-3	25-9
	Hem-fir	#1	9-1	13-8	17-4	21-1	24-6	8-1	11-10	15-0	18-4	21-3
	Hem-fir	#2	8-8	12-11	16-4	20-0	23-2	7-8	11-2	14-2	17-4	20-1
	Hem-fir	#3	6-9	9-11	12-7	15-4	17-9	5-10	8-7	10-10	13-3	15-5
	Southern pine	SS	9-8	15-2	19-11	25-5	Note b	9-8	15-2	19-7	23-4	Note b
	Southern pine	#1	9-3	14-3	18-1	21-2	25-2	8-4	12-4	15-8	18-4	21-9
	Southern pine	#2	8-2	12-3	15-7	18-6	21-9	7-1	10-8	13-6	16-0	18-10
	Southern pine	#3	6-4	9-4	11-9	14-3	16-10	5-6	8-1	10-2	12-4	14-7
	Spruce-pine-fir	SS	9-1	14-3	18-9	23-11	Note b	9-1	13-7	17-2	21-0	24-4
	Spruce-pine-fir	#1	8-10	13-1	16-7	20-3	23-6	7-9	11-4	14-4	17-7	20-4
	Spruce-pine-fir	#2	8-10	13-1	16-7	20-3	23-6	7-9	11-4	14-4	17-7	20-4
	Spruce-pine-fir	#3	6-9	9-11	12-7	15-4	17-9	5-10	8-7	10-10	13-3	15-5

(continued)

TABLE R802.5.1(1)—continued
RAFTER SPANS FOR COMMON LUMBER SPECIES
(Roof live load=20 psf, ceiling not attached to rafters, L/Δ = 180)

RAFTER SPACING (inches)	SPECIES AND GRADE		DEAD LOAD = 10 psf					DEAD LOAD = 20 psf				
			2 × 4	2 × 6	2 × 8	2 × 10	2 × 12	2 × 4	2 × 6	2 × 8	2 × 10	2 × 12
			Maximum rafter spans[a]									
			(feet - inches)	(feet - inches)	(feet - inches)	(feet - inches)	(feet - inches)	(feet - inches)	(feet - inches)	(feet - inches)	(feet - inches)	(feet - inches)
24	Douglas fir-larch	SS	9-1	14-4	18-10	23-4	Note b	8-11	13-1	16-7	20-3	23-5
	Douglas fir-larch	#1	8-7	12-6	15-10	19-5	22-6	7-5	10-10	13-9	16-9	19-6
	Douglas fir-larch	#2	8-0	11-9	14-10	18-2	21-0	6-11	10-2	12-10	15-8	18-3
	Douglas fir-larch	#3	6-1	8-10	11-3	13-8	15-11	5-3	7-8	9-9	11-10	13-9
	Hem-fir	SS	8-7	13-6	17-10	22-9	Note b	8-7	12-10	16-3	19-10	23-0
	Hem-fir	#1	8-4	12-3	15-6	18-11	21-11	7-3	10-7	13-5	16-4	19-0
	Hem-fir	#2	7-11	11-7	14-8	17-10	20-9	6-10	10-0	12-8	15-6	17-11
	Hem-fir	#3	6-1	8-10	11-3	13-8	15-11	5-3	7-8	9-9	11-10	13-9
	Southern pine	SS	8-11	14-1	18-6	23-8	Note b	8-11	13-10	17-6	20-10	24-8
	Southern pine	#1	8-7	12-9	16-2	18-11	22-6	7-5	11-1	14-0	16-5	19-6
	Southern pine	#2	7-4	11-0	13-11	16-6	19-6	6-4	9-6	12-1	14-4	16-10
	Southern pine	#3	5-8	8-4	10-6	12-9	15-1	4-11	7-3	9-1	11-0	13-1
	Spruce-pine-fir	SS	8-5	13-3	17-5	21-8	25-2	8-4	12-2	15-4	18-9	21-9
	Spruce-pine-fir	#1	8-0	11-9	14-10	18-2	21-0	6-11	10-2	12-10	15-8	18-3
	Spruce-pine-fir	#2	8-0	11-9	14-10	18-2	21-0	6-11	10-2	12-10	15-8	18-3
	Spruce-pine-fir	#3	6-1	8-10	11-3	13-8	15-11	5-3	7-8	9-9	11-10	13-9

Check sources for availability of lumber in lengths greater than 20 feet.

For SI: 1 inch = 25.4 mm, 1 foot = 304.8 mm, 1 pound per square foot = 0.0479 kPa.

a. The tabulated rafter spans assume that ceiling joists are located at the bottom of the attic space or that some other method of resisting the outward push of the rafters on the bearing walls, such as rafter ties, is provided at that location. When ceiling joists or rafter ties are located higher in the attic space, the rafter spans shall be multiplied by the factors given below:

H_C/H_R	Rafter Span Adjustment Factor
1/3	0.67
1/4	0.76
1/5	0.83
1/6	0.90
1/7.5 or less	1.00

where:

H_C = Height of ceiling joists or rafter ties measured vertically above the top of the rafter support walls.

H_R = Height of roof ridge measured vertically above the top of the rafter support walls.

b. Span exceeds 26 feet in length.

TABLE R802.5.1(2)
RAFTER SPANS FOR COMMON LUMBER SPECIES
(Roof live load=20 psf, ceiling attached to rafters, L/Δ = 240)

RAFTER SPACING (inches)	SPECIES AND GRADE		DEAD LOAD = 10 psf					DEAD LOAD = 20 psf				
			2 × 4	2 × 6	2 × 8	2 × 10	2 × 12	2 × 4	2 × 6	2 × 8	2 × 10	2 × 12
			Maximum rafter spans[a]									
			(feet - inches)	(feet - inches)	(feet - inches)	(feet - inches)	(feet - inches)	(feet - inches)	(feet - inches)	(feet - inches)	(feet - inches)	(feet - inches)
12	Douglas fir-larch	SS	10-5	16-4	21-7	Note b	Note b	10-5	16-4	21-7	Note b	Note b
	Douglas fir-larch	#1	10-0	15-9	20-10	Note b	Note b	10-0	15-4	19-5	23-9	Note b
	Douglas fir-larch	#2	9-10	15-6	20-5	25-8	Note b	9-10	14-4	18-2	22-3	25-9
	Douglas fir-larch	#3	8-7	12-6	15-10	19-5	22-6	7-5	10-10	13-9	16-9	19-6
	Hem-fir	SS	9-10	15-6	20-5	Note b	Note b	9-10	15-6	20-5	Note b	Note b
	Hem-fir	#1	9-8	15-2	19-11	25-5	Note b	9-8	14-11	18-11	23-2	Note b
	Hem-fir	#2	9-2	14-5	19-0	24-3	Note b	9-2	14-2	17-11	21-11	25-5
	Hem-fir	#3	8-7	12-6	15-10	19-5	22-6	7-5	10-10	13-9	16-9	19-6
	Southern pine	SS	10-3	16-1	21-2	Note b	Note b	10-3	16-1	21-2	Note b	Note b
	Southern pine	#1	9-10	15-6	20-5	Note b	Note b	9-10	15-6	19-10	23-2	Note b
	Southern pine	#2	9-5	14-9	19-6	23-5	Note b	9-0	13-6	17-1	20-3	23-10
	Southern pine	#3	8-0	11-9	14-10	18-0	21-4	6-11	10-2	12-10	15-7	18-6
	Spruce-pine-fir	SS	9-8	15-2	19-11	25-5	Note b	9-8	15-2	19-11	25-5	Note b
	Spruce-pine-fir	#1	9-5	14-9	19-6	24-10	Note b	9-5	14-4	18-2	22-3	25-9
	Spruce-pine-fir	#2	9-5	14-9	19-6	24-10	Note b	9-5	14-4	18-2	22-3	25-9
	Spruce-pine-fir	#3	8-7	12-6	15-10	19-5	22-6	7-5	10-10	13-9	16-9	19-6
16	Douglas fir-larch	SS	9-6	14-11	19-7	25-0	Note b	9-6	14-11	19-7	24-9	Note b
	Douglas fir-larch	#1	9-1	14-4	18-11	23-9	Note b	9-1	13-3	16-10	20-7	23-10
	Douglas fir-larch	#2	8-11	14-1	18-2	22-3	25-9	8-6	12-5	15-9	19-3	22-4
	Douglas fir-larch	#3	7-5	10-10	13-9	16-9	19-6	6-5	9-5	11-11	14-6	16-10
	Hem-fir	SS	8-11	14-1	18-6	23-8	Note b	8-11	14-1	18-6	23-8	Note b
	Hem-fir	#1	8-9	13-9	18-1	23-1	Note b	8-9	12-11	16-5	20-0	23-3
	Hem-fir	#2	8-4	13-1	17-3	21-11	25-5	8-4	12-3	15-6	18-11	22-0
	Hem-fir	#3	7-5	10-10	13-9	16-9	19-6	6-5	9-5	11-11	14-6	16-10
	Southern pine	SS	9-4	14-7	19-3	24-7	Note b	9-4	14-7	19-3	24-7	Note b
	Southern pine	#1	8-11	14-1	18-6	23-2	Note b	8-11	13-7	17-2	20-1	23-10
	Southern pine	#2	8-7	13-5	17-1	20-3	23-10	7-9	11-8	14-9	17-6	20-8
	Southern pine	#3	6-11	10-2	12-10	15-7	18-6	6-0	8-10	11-2	13-6	16-0
	Spruce-pine-fir	SS	8-9	13-9	18-1	23-1	Note b	8-9	13-9	18-1	23-0	Note b
	Spruce-pine-fir	#1	8-7	13-5	17-9	22-3	25-9	8-6	12-5	15-9	19-3	22-4
	Spruce-pine-fir	#2	8-7	13-5	17-9	22-3	25-9	8-6	12-5	15-9	19-3	22-4
	Spruce-pine-fir	#3	7-5	10-10	13-9	16-9	19-6	6-5	9-5	11-11	14-6	16-10
19.2	Douglas fir-larch	SS	8-11	14-0	18-5	23-7	Note b	8-11	14-0	18-5	22-7	Note b
	Douglas fir-larch	#1	8-7	13-6	17-9	21-8	25-2	8-4	12-2	15-4	18-9	21-9
	Douglas fir-larch	#2	8-5	13-1	16-7	20-3	23-6	7-9	11-4	14-4	17-7	20-4
	Douglas fir-larch	#3	6-9	9-11	12-7	15-4	17-9	5-10	8-7	10-10	13-3	15-5
	Hem-fir	SS	8-5	13-3	17-5	22-3	Note b	8-5	13-3	17-5	22-3	25-9
	Hem-fir	#1	8-3	12-11	17-1	21-1	24-6	8-1	11-10	15-0	18-4	21-3
	Hem-fir	#2	7-10	12-4	16-3	20-0	23-2	7-8	11-2	14-2	17-4	20-1
	Hem-fir	#3	6-9	9-11	12-7	15-4	17-9	5-10	8-7	10-10	13-3	15-5
	Southern pine	SS	8-9	13-9	18-2	23-1	Note b	8-9	13-9	18-2	23-1	Note b
	Southern pine	#1	8-5	13-3	17-5	21-2	25-2	8-4	12-4	15-8	18-4	21-9
	Southern pine	#2	8-1	12-3	15-7	18-6	21-9	7-1	10-8	13-6	16-0	18-10
	Southern pine	#3	6-4	9-4	11-9	14-3	16-10	5-6	8-1	10-2	12-4	14-7
	Spruce-pine-fir	SS	8-3	12-11	17-1	21-9	Note b	8-3	12-11	17-1	21-0	24-4
	Spruce-pine-fir	#1	8-1	12-8	16-7	20-3	23-6	7-9	11-4	14-4	17-7	20-4
	Spruce-pine-fir	#2	8-1	12-8	16-7	20-3	23-6	7-9	11-4	14-4	17-7	20-4
	Spruce-pine-fir	#3	6-9	9-11	12-7	15-4	17-9	5-10	8-7	10-10	13-3	15-5

(continued)

TABLE R802.5.1(2)—continued
RAFTER SPANS FOR COMMON LUMBER SPECIES
(Roof live load=20 psf, ceiling attached to rafters, L/Δ = 240)

RAFTER SPACING (inches)	SPECIES AND GRADE		DEAD LOAD = 10 psf					DEAD LOAD = 20 psf				
			2 × 4	2 × 6	2 × 8	2 × 10	2 × 12	2 × 4	2 × 6	2 × 8	2 × 10	2 × 12
			Maximum rafter spans[a]									
			(feet - inches)	(feet - inches)	(feet - inches)	(feet - inches)	(feet - inches)	(feet - inches)	(feet - inches)	(feet - inches)	(feet - inches)	(feet - inches)
24	Douglas fir-larch	SS	8-3	13-0	17-2	2 1-10	Note b	8-3	13-0	16-7	20-3	23-5
	Douglas fir-larch	#1	8-0	12-6	15-10	19-5	22-6	7-5	10-10	13-9	16-9	19-6
	Douglas fir-larch	#2	7-10	11-9	14-10	18-2	21-0	6-11	10-2	12-10	15-8	18-3
	Douglas fir-larch	#3	6-1	8-10	11-3	13-8	15-11	5-3	7-8	9-9	11-10	13-9
	Hem-fir	SS	7-10	12-3	16-2	20-8	25-1	7-10	12-3	16-2	19-10	23-0
	Hem-fir	#1	7-8	12-0	15-6	18-11	21-11	7-3	10-7	13-5	16-4	19-0
	Hem-fir	#2	7-3	11-5	14-8	17-10	20-9	6-10	10-0	12-8	15-6	17-11
	Hem-fir	#3	6-1	8-10	11-3	13-8	15-11	5-3	7-8	9-9	11-10	13-9
	Southern pine	SS	8-1	12-9	16-10	21-6	Note b	8-1	12-9	16-10	20-10	24-8
	Southern pine	#1	7-10	12-3	16-2	18-11	22-6	7-5	11-1	14-0	16-5	19-6
	Southern pine	#2	7-4	11-0	13-11	16-6	19-6	6-4	9-6	12-1	14-4	16-10
	Southern pine	#3	5-8	8-4	10-6	12-9	15-1	4-11	7-3	9-1	11-0	13-1
	Spruce-pine-fir	SS	7-8	12-0	15-10	20-2	24-7	7-8	12-0	15-4	18-9	21-9
	Spruce-pine-fir	#1	7-6	11-9	14-10	18-2	21-0	6-11	10-2	12-10	15-8	18-3
	Spruce-pine-fir	#2	7-6	11-9	14-10	18-2	21-0	6-11	10-2	12-10	15-8	18-3
	Spruce-pine-fir	#3	6-1	8-10	11-3	13-8	15-11	5-3	7-8	9-9	11-10	13-9

Check sources for availability of lumber in lengths greater than 20 feet.

For SI: 1 inch = 25.4 mm, 1 foot = 304.8 mm, 1 pound per square foot = 0.0479 kPa.

a. The tabulated rafter spans assume that ceiling joists are located at the bottom of the attic space or that some other method of resisting the outward push of the rafters on the bearing walls, such as rafter ties, is provided at that location. When ceiling joists or rafter ties are located higher in the attic space, the rafter spans shall be multiplied by the factors given below:

H_C/H_R	Rafter Span Adjustment Factor
1/3	0.67
1/4	0.76
1/5	0.83
1/6	0.90
1/7.5 or less	1.00

where:

H_C = Height of ceiling joists or rafter ties measured vertically above the top of the rafter support walls.

H_R = Height of roof ridge measured vertically above the top of the rafter support walls.

b. Span exceeds 26 feet in length.

TABLE R802.5.1(3)
RAFTER SPANS FOR COMMON LUMBER SPECIES
(Ground snow load=30 psf, ceiling not attached to rafters, L/Δ = 180)

RAFTER SPACING (inches)	SPECIES AND GRADE		DEAD LOAD = 10 psf					DEAD LOAD = 20 psf				
			2 × 4	2 × 6	2 × 8	2 × 10	2 × 12	2 × 4	2 × 6	2 × 8	2 × 10	2 × 12
			Maximum rafter spans[a]									
			(feet - inches)	(feet - inches)	(feet - inches)	(feet - inches)	(feet - inches)	(feet - inches)	(feet - inches)	(feet - inches)	(feet - inches)	(feet - inches)
12	Douglas fir-larch	SS	10-0	15-9	20-9	Note b	Note b	10-0	15-9	20-1	24-6	Note b
	Douglas fir-larch	#1	9-8	14-9	18-8	22-9	Note b	9-0	13-2	16-8	20-4	23-7
	Douglas fir-larch	#2	9-5	13-9	17-5	21-4	24-8	8-5	12-4	15-7	19-1	22-1
	Douglas fir-larch	#3	7-1	10-5	13-2	16-1	18-8	6-4	9-4	11-9	14-5	16-8
	Hem-fir	SS	9-6	14-10	19-7	25-0	Note b	9-6	14-10	19-7	24-1	Note b
	Hem-fir	#1	9-3	14-4	18-2	22-2	25-9	8-9	12-10	16-3	19-10	23-0
	Hem-fir	#2	8-10	13-7	17-2	21-0	24-4	8-4	12-2	15-4	18-9	21-9
	Hem-fir	#3	7-1	10-5	13-2	16-1	18-8	6-4	9-4	11-9	14-5	16-8
	Southern pine	SS	9-10	15-6	20-5	Note b	Note b	9-10	15-6	20-5	25-4	Note b
	Southern pine	#1	9-6	14-10	19-0	22-3	Note b	9-0	13-5	17-0	19-11	23-7
	Southern pine	#2	8-7	12-11	16-4	19-5	22-10	7-8	11-7	14-8	17-4	20-5
	Southern pine	#3	6-7	9-9	12-4	15-0	17-9	5-11	8-9	11-0	13-5	15-10
	Spruce-pine-fir	SS	9-3	14-7	19-2	24-6	Note b	9-3	14-7	18-8	22-9	Note b
	Spruce-pine-fir	#1	9-1	13-9	17-5	21-4	24-8	8-5	12-4	15-7	19-1	22-1
	Spruce-pine-fir	#2	9-1	13-9	17-5	21-4	24-8	8-5	12-4	15-7	19-1	22-1
	Spruce-pine-fir	#3	7-1	10-5	13-2	16-1	18-8	6-4	9-4	11-9	14-5	16-8
16	Douglas fir-larch	SS	9-1	14-4	18-10	23-9	Note b	9-1	13-9	17-5	21-3	24-8
	Douglas fir-larch	#1	8-9	12-9	16-2	19-9	22-10	7-10	11-5	14-5	17-8	20-5
	Douglas fir-larch	#2	8-2	11-11	15-1	18-5	21-5	7-3	10-8	13-6	16-6	19-2
	Douglas fir-larch	#3	6-2	9-0	11-5	13-11	16-2	5-6	8-1	10-3	12-6	14-6
	Hem-fir	SS	8-7	13-6	17-10	22-9	Note b	8-7	13-6	17-1	20-10	24-2
	Hem-fir	#1	8-5	12-5	15-9	19-3	22-3	7-7	11-1	14-1	17-2	19-11
	Hem-fir	#2	8-0	11-9	14-11	18-2	21-1	7-2	10-6	13-4	16-3	18-10
	Hem-fir	#3	6-2	9-0	11-5	13-11	16-2	5-6	8-1	10-3	12-6	14-6
	Southern pine	SS	8-11	14-1	18-6	23-8	Note b	8-11	14-1	18-5	21-11	25-11
	Southern pine	#1	8-7	13-0	16-6	19-3	22-10	7-10	11-7	14-9	17-3	20-5
	Southern pine	#2	7-6	11-2	14-2	16-10	19-10	6-8	10-0	12-8	15-1	17-9
	Southern pine	#3	5-9	8-6	10-8	13-0	15-4	5-2	7-7	9-7	11-7	13-9
	Spruce-pine-fir	SS	8-5	13-3	17-5	22-1	25-7	8-5	12-9	16-2	19-9	22-10
	Spruce-pine-fir	#1	8-2	11-11	15-1	18-5	21-5	7-3	10-8	13-6	16-6	19-2
	Spruce-pine-fir	#2	8-2	11-11	15-1	18-5	21-5	7-3	10-8	13-6	16-6	19-2
	Spruce-pine-fir	#3	6-2	9-0	11-5	13-11	16-2	5-6	8-1	10-3	12-6	14-6
19.2	Douglas fir-larch	SS	8-7	13-6	17-9	21-8	25-2	8-7	12-6	15-10	19-5	22-6
	Douglas fir-larch	#1	7-11	11-8	14-9	18-0	20-11	7-1	10-5	13-2	16-1	18-8
	Douglas fir-larch	#2	7-5	10-11	13-9	16-10	19-6	6-8	9-9	12-4	15-1	17-6
	Douglas fir-larch	#3	5-7	8-3	10-5	12-9	14-9	5-0	7-4	9-4	11-5	13-2
	Hem-fir	SS	8-1	12-9	16-9	21-4	24-8	8-1	12-4	15-7	19-1	22-1
	Hem-fir	#1	7-9	11-4	14-4	17-7	20-4	6-11	10-2	12-10	15-8	18-2
	Hem-fir	#2	7-4	10-9	13-7	16-7	19-3	6-7	9-7	12-2	14-10	17-3
	Hem-fir	#3	5-7	8-3	10-5	12-9	14-9	5-0	7-4	9-4	11-5	13-2
	Southern pine	SS	8-5	13-3	17-5	22-3	Note b	8-5	13-3	16-10	20-0	23-7
	Southern pine	#1	8-0	11-10	15-1	17-7	20-11	7-1	10-7	13-5	15-9	18-8
	Southern pine	#2	6-10	10-2	12-11	15-4	18-1	6-1	9-2	11-7	13-9	16-2
	Southern pine	#3	5-3	7-9	9-9	11-10	14-0	4-8	6-11	8-9	10-7	12-6
	Spruce-pine-fir	SS	7-11	12-5	16-5	20-2	23-4	7-11	11-8	14-9	18-0	20-11
	Spruce-pine-fir	#1	7-5	10-11	13-9	16-10	19-6	6-8	9-9	12-4	15-1	17-6
	Spruce-pine-fir	#2	7-5	10-11	13-9	16-10	19-6	6-8	9-9	12-4	15-1	17-6
	Spruce-pine-fir	#3	5-7	8-3	10-5	12-9	14-9	5-0	7-4	9-4	11-5	13-2

(continued)

TABLE R802.5.1(3)—continued
RAFTER SPANS FOR COMMON LUMBER SPECIES
(Ground snow load=30 psf, ceiling not attached to rafters, L/Δ = 180)

RAFTER SPACING (inches)	SPECIES AND GRADE		DEAD LOAD = 10 psf					DEAD LOAD = 20 psf				
			2 × 4	2 × 6	2 × 8	2 × 10	2 × 12	2 × 4	2 × 6	2 × 8	2 × 10	2 × 12
			Maximum rafter spans[a]									
			(feet - inches)	(feet - inches)	(feet - inches)	(feet - inches)	(feet - inches)	(feet - inches)	(feet - inches)	(feet - inches)	(feet - inches)	(feet - inches)
24	Douglas fir-larch	SS	7-11	12-6	15-10	19-5	22-6	7-8	11-3	14-2	17-4	20-1
	Douglas fir-larch	#1	7-1	10-5	13-2	16-1	18-8	6-4	9-4	11-9	14-5	16-8
	Douglas fir-larch	#2	6-8	9-9	12-4	15-1	17-6	5-11	8-8	11-0	13-6	15-7
	Douglas fir-larch	#3	5-0	7-4	9-4	11-5	13-2	4-6	6-7	8-4	10-2	11-10
	Hem-fir	SS	7-6	11-10	15-7	19-1	22-1	7-6	11-0	13-11	17-0	19-9
	Hem-fir	#1	6-11	10-2	12-10	15-8	18-2	6-2	9-1	11-6	14-0	16-3
	Hem-fir	#2	6-7	9-7	12-2	14-10	17-3	5-10	8-7	10-10	13-3	15-5
	Hem-fir	#3	5-0	7-4	9-4	11-5	13-2	4-6	6-7	8-4	10-2	11-10
	Southern pine	SS	7-10	12-3	16-2	20-0	23-7	7-10	11-10	15-0	17-11	21-2
	Southern pine	#1	7-1	10-7	13-5	15-9	18-8	6-4	9-6	12-0	14-1	16-8
	Southern pine	#2	6-1	9-2	11-7	13-9	16-2	5-5	8-2	10-4	12-3	14-6
	Southern pine	#3	4-8	6-11	8-9	10-7	12-6	4-2	6-2	7-10	9-6	11-2
	Spruce-pine-fir	SS	7-4	11-7	14-9	18-0	20-11	7-1	10-5	13-2	16-1	18-8
	Spruce-pine-fir	#1	6-8	9-9	12-4	15-1	17-6	5-11	8-8	11-0	13-6	15-7
	Spruce-pine-fir	#2	6-8	9-9	12-4	15-1	17-6	5-11	8-8	11-0	13-6	15-7
	Spruce-pine-fir	#3	5-0	7-4	9-4	11-5	13-2	4-6	6-7	8-4	10-2	11-10

Check sources for availability of lumber in lengths greater than 20 feet.

For SI: 1 inch = 25.4 mm, 1 foot = 304.8 mm, 1 pound per square foot = 0.0479 kPa.

a. The tabulated rafter spans assume that ceiling joists are located at the bottom of the attic space or that some other method of resisting the outward push of the rafters on the bearing walls, such as rafter ties, is provided at that location. When ceiling joists or rafter ties are located higher in the attic space, the rafter spans shall be multiplied by the factors given below:

H_C/H_R	Rafter Span Adjustment Factor
1/3	0.67
1/4	0.76
1/5	0.83
1/6	0.90
1/7.5 or less	1.00

where:

H_C = Height of ceiling joists or rafter ties measured vertically above the top of the rafter support walls.

H_R = Height of roof ridge measured vertically above the top of the rafter support walls.

b. Span exceeds 26 feet in length.

TABLE R802.5.1(5)
RAFTER SPANS FOR COMMON LUMBER SPECIES
(Ground snow load=30 psf, ceiling attached to rafters, L/Δ = 240)

RAFTER SPACING (inches)	SPECIES AND GRADE		DEAD LOAD = 10 psf					DEAD LOAD = 20 psf				
			2 × 4	2 × 6	2 × 8	2 × 10	2 × 12	2 × 4	2 × 6	2 × 8	2 × 10	2 × 12
			Maximum rafter spans[a]									
			(feet - inches)	(feet - inches)	(feet - inches)	(feet - inches)	(feet - inches)	(feet - inches)	(feet - inches)	(feet - inches)	(feet - inches)	(feet - inches)
12	Douglas fir-larch	SS	9-1	14-4	18-10	24-1	Note b	9-1	14-4	18-10	24-1	Note b
	Douglas fir-larch	#1	8-9	13-9	18-2	22-9	Note b	8-9	13-2	16-8	20-4	23-7
	Douglas fir-larch	#2	8-7	13-6	17-5	21-4	24-8	8-5	12-4	15-7	19-1	22-1
	Douglas fir-larch	#3	7-1	10-5	13-2	16-1	18-8	6-4	9-4	11-9	14-5	16-8
	Hem-fir	SS	8-7	13-6	17-10	22-9	Note b	8-7	13-6	17-10	22-9	Note b
	Hem-fir	#1	8-5	13-3	17-5	22-2	25-9	8-5	12-10	16-3	19-10	23-0
	Hem-fir	#2	8-0	12-7	16-7	21-0	24-4	8-0	12-2	15-4	18-9	21-9
	Hem-fir	#3	7-1	10-5	13-2	16-1	18-8	6-4	9-4	11-9	14-5	16-8
	Southern pine	SS	8-11	14-1	18-6	23-8	Note b	8-11	14-1	18-6	23-8	Note b
	Southern pine	#1	8-7	13-6	17-10	22-3	Note b	8-7	13-5	17-0	19-11	23-7
	Southern pine	#2	8-3	12-11	16-4	19-5	22-10	7-8	11-7	14-8	17-4	20-5
	Southern pine	#3	6-7	9-9	12-4	15-0	17-9	5-11	8-9	11-0	13-5	15-10
	Spruce-pine-fir	SS	8-5	13-3	17-5	22-3	Note b	8-5	13-3	17-5	22-3	Note b
	Spruce-pine-fir	#1	8-3	12-11	17-0	21-4	24-8	8-3	12-4	15-7	19-1	22-1
	Spruce-pine-fir	#2	8-3	12-11	17-0	21-4	24-8	8-3	12-4	15-7	19-1	22-1
	Spruce-pine-fir	#3	7-1	10-5	13-2	16-1	18-8	6-4	9-4	11-9	14-5	16-8
16	Douglas fir-larch	SS	8-3	13-0	17-2	21-10	Note b	8-3	13-0	17-2	21-3	24-8
	Douglas fir-larch	#1	8-0	12-6	16-2	19-9	22-10	7-10	11-5	14-5	17-8	20-5
	Douglas fir-larch	#2	7-10	11-11	15-1	18-5	21-5	7-3	10-8	13-6	16-6	19-2
	Douglas fir-larch	#3	6-2	9-0	11-5	13-11	16-2	5-6	8-1	10-3	12-6	14-6
	Hem-fir	SS	7-10	12-3	16-2	20-8	25-1	7-10	12-3	16-2	20-8	24-2
	Hem-fir	#1	7-8	12-0	15-9	19-3	22-3	7-7	11-1	14-1	17-2	19-11
	Hem-fir	#2	7-3	11-5	14-11	18-2	21-1	7-2	10-6	13-4	16-3	18-10
	Hem-fir	#3	6-2	9-0	11-5	13-11	16-2	5-6	8-1	10-3	12-6	14-6
	Southern pine	SS	8-1	12-9	16-10	21-6	Note b	8-1	12-9	16-10	21-6	25-11
	Southern pine	#1	7-10	12-3	16-2	19-3	22-10	7-10	11-7	14-9	17-3	20-5
	Southern pine	#2	7-6	11-2	14-2	16-10	19-10	6-8	10-0	12-8	15-1	17-9
	Southern pine	#3	5-9	8-6	10-8	13-0	15-4	5-2	7-7	9-7	11-7	13-9
	Spruce-pine-fir	SS	7-8	12-0	15-10	20-2	24-7	7-8	12-0	15-10	19-9	22-10
	Spruce-pine-fir	#1	7-6	11-9	15-1	18-5	21-5	7-3	10-8	13-6	16-6	19-2
	Spruce-pine-fir	#2	7-6	11-9	15-1	18-5	21-5	7-3	10-8	13-6	16-6	19-2
	Spruce-pine-fir	#3	6-2	9-0	11-5	13-11	16-2	5-6	8-1	10-3	12-6	14-6
19.2	Douglas fir-larch	SS	7-9	12-3	16-1	20-7	25-0	7-9	12-3	15-10	19-5	22-6
	Douglas fir-larch	#1	7-6	11-8	14-9	18-0	20-11	7-1	10-5	13-2	16-1	18-8
	Douglas fir-larch	#2	7-4	10-11	13-9	16-10	19-6	6-8	9-9	12-4	15-1	17-6
	Douglas fir-larch	#3	5-7	8-3	10-5	12-9	14-9	5-0	7-4	9-4	11-5	13-2
	Hem-fir	SS	7-4	11-7	15-3	19-5	23-7	7-4	11-7	15-3	19-1	22-1
	Hem-fir	#1	7-2	11-4	14-4	17-7	20-4	6-11	10-2	12-10	15-8	18-2
	Hem-fir	#2	6-10	10-9	13-7	16-7	19-3	6-7	9-7	12-2	14-10	17-3
	Hem-fir	#3	5-7	8-3	10-5	12-9	14-9	5-0	7-4	9-4	11-5	13-2
	Southern pine	SS	7-8	12-0	15-10	20-2	24-7	7-8	12-0	15-10	20-0	23-7
	Southern pine	#1	7-4	11-7	15-1	17-7	20-11	7-1	10-7	13-5	15-9	18-8
	Southern pine	#2	6-10	10-2	12-11	15-4	18-1	6-1	9-2	11-7	13-9	16-2
	Southern pine	#3	5-3	7-9	9-9	11-10	14-0	4-8	6-11	8-9	10-7	12-6
	Spruce-pine-fir	SS	7-2	11-4	14-11	19-0	23-1	7-2	11-4	14-9	18-0	20-11
	Spruce-pine-fir	#1	7-0	10-11	13-9	16-10	19-6	6-8	9-9	12-4	15-1	17-6
	Spruce-pine-fir	#2	7-0	10-11	13-9	16-10	19-6	6-8	9-9	12-4	15-1	17-6
	Spruce-pine-fir	#3	5-7	8-3	10-5	12-9	14-9	5-0	7-4	9-4	11-5	13-2

(continued)

TABLE R802.5.1(5)—continued
RAFTER SPANS FOR COMMON LUMBER SPECIES
(Ground snow load=30 psf, ceiling attached to rafters, L/Δ = 240)

RAFTER SPACING (inches)	SPECIES AND GRADE		DEAD LOAD = 10 psf					DEAD LOAD = 20 psf				
			2 × 4	2 × 6	2 × 8	2 × 10	2 × 12	2 × 4	2 × 6	2 × 8	2 × 10	2 × 12
			Maximum rafter spans[a]									
			(feet - inches)	(feet - inches)	(feet - inches)	(feet - inches)	(feet - inches)	(feet - inches)	(feet - inches)	(feet - inches)	(feet - inches)	(feet - inches)
24	Douglas fir-larch	SS	7-3	11-4	15-0	19-1	22-6	7-3	11-3	14-2	17-4	20-1
	Douglas fir-larch	#1	7-0	10-5	13-2	16-1	18-8	6-4	9-4	11-9	14-5	16-8
	Douglas fir-larch	#2	6-8	9-9	12-4	15-1	17-6	5-11	8-8	11-0	13-6	15-7
	Douglas fir-larch	#3	5-0	7-4	9-4	11-5	13-2	4-6	6-7	8-4	10-2	11-10
	Hem-fir	SS	6-10	10-9	14-2	18-0	21-11	6-10	10-9	13-11	17-0	19-9
	Hem-fir	#1	6-8	10-2	12-10	15-8	18-2	6-2	9-1	11-6	14-0	16-3
	Hem-fir	#2	6-4	9-7	12-2	14-10	17-3	5-10	8-7	10-10	13-3	15-5
	Hem-fir	#3	5-0	7-4	9-4	11-5	13-2	4-6	6-7	8-4	10-2	11-10
	Southern pine	SS	7-1	11-2	14-8	18-9	22-10	7-1	11-2	14-8	17-11	21-2
	Southern pine	#1	6-10	10-7	13-5	15-9	18-8	6-4	9-6	12-0	14-1	16-8
	Southern pine	#2	6-1	9-2	11-7	13-9	16-2	5-5	8-2	10-4	12-3	14-6
	Southern pine	#3	4-8	6-11	8-9	10-7	12-6	4-2	6-2	7-10	9-6	11-2
	Spruce-pine-fir	SS	6-8	10-6	13-10	17-8	20-11	6-8	10-5	13-2	16-1	18-8
	Spruce-pine-fir	#1	6-6	9-9	12-4	15-1	17-6	5-11	8-8	11-0	13-6	15-7
	Spruce-pine-fir	#2	6-6	9-9	12-4	15-1	17-6	5-11	8-8	11-0	13-6	15-7
	Spruce-pine-fir	#3	5-0	7-4	9-4	11-5	13-2	4-6	6-7	8-4	10-2	11-10

Check sources for availability of lumber in lengths greater than 20 feet.

For SI: 1 inch = 25.4 mm, 1 foot = 304.8 mm, 1 pound per square foot = 0.0479 kPa.

a. The tabulated rafter spans assume that ceiling joists are located at the bottom of the attic space or that some other method of resisting the outward push of the rafters on the bearing walls, such as rafter ties, is provided at that location. When ceiling joists or rafter ties are located higher in the attic space, the rafter spans shall be multiplied by the factors given below:

H_C/H_R	Rafter Span Adjustment Factor
1/3	0.67
1/4	0.76
1/5	0.83
1/6	0.90
1/7.5 or less	1.00

where:

H_C = Height of ceiling joists or rafter ties measured vertically above the top of the rafter support walls.

H_R = Height of roof ridge measured vertically above the top of the rafter support walls.

b. Span exceeds 26 feet in length.

2.

Any person, firm, corporation, agent or employee thereof who violates any of the provisions of this ordinance shall be guilty of a misdemeanor and upon conviction thereof shall be fined an amount not to exceed Two Thousand and No/100 Dollars ($2,000) for each offense. Each day that a violation is permitted to exist shall constitute a separate offense.

3.

This ordinance shall be and is hereby declared to be cumulative of all other ordinances of the City of Arlington; and this ordinance shall not operate to repeal or affect any of such other ordinances except insofar as the provisions thereof might be inconsistent or in conflict with the provisions of this ordinance, in which event such conflicting provisions, if any, in such other ordinance or ordinances are hereby repealed.

4.

If any section, subsection, sentence, clause or phrase of this ordinance is for any reason held to be unconstitutional, such holding shall not affect the validity of the remaining portions of this ordinance.

5.

All of the regulations provided in this ordinance are hereby declared to be governmental and for the health, safety and welfare of the general public. Any member of the City Council or any City official or employee charged with the enforcement of this ordinance, acting for the City of Arlington in the discharge of his/her duties, shall not thereby render himself/herself personally liable; and he/she is hereby relieved from all personal liability for any damage that might accrue to persons or property as a result of any act required or permitted in the discharge of his/her said duties.

6.

Any violation of this ordinance can be enjoined by a suit filed in the name of the City of Arlington in a court of competent jurisdiction, and this remedy shall be in addition to any penal provision in this ordinance or in the Code of the City of Arlington.

7.

The caption and penalty clause of this ordinance shall be published in a newspaper of general circulation in the City of Arlington, Texas, in compliance with the provisions of Article VII, Section 15, of the City Charter. Further, this ordinance may be published in pamphlet form and shall be admissible in such form in any court, as provided by law.

This ordinance shall become effective September 20, 2013, which is 30 days after the final adoption of the ordinance at the second reading on August 20, 2013.

PRESENTED AND GIVEN FIRST READING on the 6th day of August, 2013, at a regular meeting of the City Council of the City of Arlington, Texas; and GIVEN SECOND READING, passed and approved on the 20th day of August, 2013, by a vote of 9 ayes and 0 nays at a regular meeting of the City Council of the City of Arlington, Texas.

ROBERT N. CLUCK, Mayor

ATTEST:

MARY W. SUPINO, City Secretary

APPROVED AS TO FORM:
JAY DOEGEY, City Attorney

BY

Ordinance No. 13-037

An ordinance amending the "Construction" Chapter of the Code of the City of Arlington, Texas, 1987, through the amendment of Article I, Building Code, Section 1.04, Amendments, Additions and Deletions, Subsection (D), by the addition of Subsection (7.1), relative to revisions to Table R302.1 regarding the minimum fire separation distance for exterior walls to be constructed without a fire-resistance rating requirement; providing for a fine of up to $2,000 for each offense in violation of the ordinance; providing this ordinance be cumulative; providing for severability, governmental immunity, injunctions, and publication; and becoming effective September 30, 2013 and applied retroactively to May 24, 2012

BE IT ORDAINED BY THE CITY COUNCIL OF THE CITY OF ARLINGTON, TEXAS:

1.

That the "**Construction**" Chapter of the Code of the City of Arlington, Texas, 1987, is hereby amended through the amendment of Article I, Building Code, **Section 1.04**, Amendments, Additions and Deletions, **Subsection (D)**, by the addition of Subsection (7.1), to read as follows:

7.1. The amendment of Table R302.1, entitled Exterior Walls, to read as follows during each effective time period:

TABLE R302.1
EXTERIOR WALLS
Effective from May 24, 2012 to September 30, 2013

EXTERIOR WALL ELEMENT		MINIMUM FIRE-RESISTANCE RATING	MINIMUM FIRE SEPARATION DISTANCE
Walls	(Fire-resistance rated)	1 hour-tested in accordance with ASTM E 119 or UL 263 with exposure from both sides	< 4 feet 6 inches
	(Not fire-resistance rated)	0 hours	≥ 4 feet 6 inches
Projections	(Fire-resistance rated)	1 hour on the underside	≥ 2 feet to 3 feet 6 inches
	(Not fire-resistance rated)	0 hours	3 feet 6 inches
Openings in walls	Not allowed	N/A	< 3 feet
	25% maximum of wall area	0	3 feet
	Unlimited	0	5 feet
Penetrations	All	Comply with Section R302.4	< 4 feet 6 inches
		None required	4 feet 6 inches

TABLE R302.1
EXTERIOR WALLS
Effective after September 30, 2013

EXTERIOR WALL ELEMENT		MINIMUM FIRE-RESISTANCE RATING	MINIMUM FIRE SEPARATION DISTANCE
Walls	(Fire-resistance rated)	1 hour-tested in accordance with ASTM E 119 or UL 263 with exposure from both sides	< 5 feet
	(Not fire-resistance rated)	0 hours	≥ 5 feet
Projections	(Fire-resistance rated)	1 hour on the underside	≥ 2 feet to 5 feet
	(Not fire-resistance rated)	0 hours	5 feet
Openings in walls	Not allowed	N/A	< 3 feet
	25% maximum of wall area	0	3 feet
	Unlimited	0	5 feet
Penetrations	All	Comply with Section R317.3	< 5 feet
		None required	5 feet

2.

Any person, firm, corporation, agent or employee thereof who violates any of the provisions of this ordinance shall be guilty of a misdemeanor and upon conviction thereof shall be fined an amount not to exceed Two Thousand and No/100 Dollars ($2,000) for each offense. Each day that a violation is permitted to exist shall constitute a separate offense.

3.

This ordinance shall be and is hereby declared to be cumulative of all other ordinances of the City of Arlington; and this ordinance shall not operate to repeal or affect any of such other ordinances except insofar as the provisions thereof might be inconsistent or in conflict with the provisions of this ordinance, in which event such conflicting provisions, if any, in such other ordinance or ordinances are hereby repealed.

4.

If any section, subsection, sentence, clause or phrase of this ordinance is for any reason held to be unconstitutional, such holding shall not affect the validity of the remaining portions of this ordinance.

5.

All of the regulations provided in this ordinance are hereby declared to be governmental and for the health, safety and welfare of the general public. Any member of the City Council or any City official or employee charged with the enforcement of this ordinance, acting for the City of Arlington in the discharge of his/her duties, shall not thereby render himself/herself personally liable; and he/she is hereby relieved from all personal liability for any damage that might accrue to persons or property as a result of any act required or permitted in the discharge of his/her said duties.

6.

Any violation of this ordinance can be enjoined by a suit filed in the name of the City of Arlington in a court of competent jurisdiction, and this remedy shall be in addition to any penal provision in this ordinance or in the Code of the City of Arlington.

7.

The caption and penalty clause of this ordinance shall be published in a newspaper of general circulation in the City of Arlington, Texas, in compliance with the provisions of Article VII, Section 15, of the City Charter. Further, this ordinance may be published in pamphlet form and shall be admissible in such form in any court, as provided by law.

This ordinance shall become effective on September 30, 2013, which is more than 30 days after the final adoption of the ordinance at the second reading on August 20, 2013, and the provisions of this ordinance shall be applicable retroactively to all pending proceedings, applications, permits, and petitions commenced after May 24, 2012.

PRESENTED AND GIVEN FIRST READING on the 6th day of August, 2013, at a regular meeting of the City Council of the City of Arlington, Texas; and GIVEN SECOND READING, passed and approved on the 20th day of August, 2013, by a vote of 9 ayes and 0 nays at a regular meeting of the City Council of the City of Arlington, Texas.

ROBERT N. CLUCK, Mayor

ATTEST:

MARY W. SUPINO, City Secretary

APPROVED AS TO FORM:
JAY DOEGEY, City Attorney

BY

Ordinance No. 13-055

An ordinance amending the "Construction" Chapter of the Code of the City of Arlington, Texas, 1987, through the amendment of Article I, Building Code, Section 1.04, Amendments, Additions and Deletions, Subsection (D), by the addition of Subsections (57.1), (57.2), (60.1), (60.2), (60.3), (60.4), (60.5), (60.6), (64.1), (64.2), (64.3), (64.4), (64.5), (64.6) and (64.7); relative to the Safe Drinking Water Act; Article IV, Registration, Permits and Inspections, Section 4.02, Commercial Site Plan and Permits Required, Subsection (B), by the deletion of Subsection (6) and the renumbering of the remaining subsections; Section 4.02, Subsection (C)(1), by the addition of Subsection (b); relative to private property paving; providing for a fine of up to $2,000 for each offense in violation of the ordinance; providing this ordinance be cumulative; providing for severability, governmental immunity, injunctions, and publication; and becoming effective January 4, 2014

BE IT ORDAINED BY THE CITY COUNCIL OF THE CITY OF ARLINGTON, TEXAS:

1.

That the "**Construction**" Chapter of the Code of the City of Arlington, Texas, 1987, is hereby amended through the amendment of Article I, Building Code, **Section 1.04**, Amendments, Additions and Deletions, **Subsection (D)**, by the addition of Subsections (57.1) and (57.2) so that hereafter said Subsections shall read as follows:

57.1 The amendment of Section P2608.5, entitled Water supply systems., to read as follows:

P2608.5 Water supply systems. Water service pipes, water distribution pipes and the necessary connecting pipes, fittings, control valves, faucets and all appurtenances used to dispense water intended for human ingestion shall be evaluated and listed as conforming to the requirements of NSF 61 and NSF 372.

57.2 The amendment of Section P2722.1, entitled General., to read as follows:

P2722.1 General. Fixture supply valves and faucets shall comply with ASME A112.18.1/CSA B125.1 as listed in Table P2701.1. Faucets and fixture fittings that supply drinking water for human ingestion shall

conform to the requirements of NSF 61, Section 9 and NSF 372. Flexible water connectors shall conform to the requirements of Section P2905.7.

Further, **Article I**, **Section 1.04**, **Subsection (D)**, is hereby amended by the addition of Subsections (60.1), (60.2), (60.3), (60.4), (60.5) and (60.6) so that hereafter said Subsections shall read as follows:

60.1 The amendment of Section P2903.9.4, entitled Valve requirements, to read as follows:

P2903.9.4 Valve requirements. Valves shall be of an *approved* type and compatible with the type of piping material installed in the system. Ball valves, gate valves, globe valves and plug valves intended to supply drinking water shall meet the requirements of NSF 61 and NSF 372.

60.2 The amendment of Section P2905.2, entitled Lead content, to read as follows:

P2905.2 Lead content. Pipe and fittings used in the water-supply system shall have a maximum of less than 0.25% lead in accordance with NSF 372.

60.3 The amendment of Section P2905.4, entitled Water service pipe., to read as follows:

P2905.4 Water service pipe. Water service pipe shall conform to NSF 61 and NSF 372 and shall conform to one of the standards listed in Table P2905.4. Water service pipe or tubing, installed underground and outside the structure, shall have a minimum working pressure rating of 160 pounds per square inch at 73°F (1103kPa at 23°C). Where the water pressure exceeds 160 pounds per square inch (1103kPa), piping material shall have a rated working pressure equal to or greater than the highest available pressure. Water service piping materials not-third party certified for water distribution shall terminate at or before the full open valve located at the entrance to the structure. Ductile iron water service pipe shall be cement mortar lined in accordance with AWWA C104.

60.4 The amendment of Section P2905.5, entitled Water-distribution pipe., to read as follows:

P2905.5 Water-distribution pipe. Water-distribution pipe within *dwelling units* shall conform to NSF 61 and NSF 372 and shall conform to one of the standards listed in Table P2905.5. All hot-water distribution pipe and tubing shall have a minimum pressure rating of 100 psi at 180°F (689 kPa at 82°C).

60.5 The amendment of Section P2905.6, entitled Fittings., to read as follows:

P2905.6 Fittings. Pipe fittings shall be *approved* for installation with the piping material installed and shall comply with the applicable standards listed in Table P2905.6. All pipe fittings used in water supply systems shall also comply with NSF 61 and NSF 372.

60.6 The amendment of Section P2908.3, entitled Connection tubing., to read as follows:

P2908.3 Connection tubing. The tubing to and from drinking water treatment units shall be of a size and material recommended by the manufacturer. The tubing shall comply with NSF 14, NSF 42, NSF 44, NSF 53, NSF 58; or NSF 61 and NSF 372.

Further, **Article I, Section 1.04, Subsection (D)**, is hereby amended by the addition of Subsections (64.1), (64.2), (64.3), (64.4), (64.5), (64.6) and (64.7) so that hereafter said Subsections shall read as follows:

64.1 The amendment of Chapter 44, entitled Referenced Standards, by the amendment of the ASTM Standard Reference Number B 32-04 to read as follows:

B 32-08 Specifications for Solder Metal...P3003.10.3, P3003.11.3

64.2 The amendment of Chapter 44, entitled Referenced Standards, by the amendment of the ASTM Standard Reference Number B 88-03 to read as follows:

B 88-03 Specifications for Seamless Copper Water Tube.....G2414.5.2, Table M2101.1, Table P3002.1(1), Table P3002.1(2), Table P3002.2

64.3 The amendment of Chapter 44, entitled Referenced Standards, by the addition of the ASTM Standard Reference Number B 88-09 to read as follows:

B 88-09 Specifications for Seamless Copper Water Tube.....Table P2905.4, Table P2905.5

64.4 The amendment of Chapter 44, entitled Referenced Standards, by the amendment of the ASTM Standard Reference Number B 813-00e01 to read as follows:

B 813-00e01 Specifications for Liquid and Paste Fluxes for Soldering of Copper and Copper Alloy Tube.....Table M2101.1, P3003.5.1, P3003.10.3, P3003.11.3

64.5 The amendment of Chapter 44, entitled Referenced Standards, by the addition of the ASTM Standard Reference Number B 813-10 to read as follows:

B 813-10 Specifications for Liquid and Paste Fluxes for Soldering of Copper and Copper Alloy Tube.....P2904.14

64.6 The amendment of Chapter 44, entitled Referenced Standards, by the amendment of the NSF Standard Reference Number 61-2007a to read as follows:

61-2011 Drinking Water System Components- Health Effects.....P2608.5, P2722.1, P2903.9.4, P2905.4, P2905.5, P2905.6, P2908.3

64.7 The amendment of Chapter 44, entitled Referenced Standards, by the addition of the following NSF Standard Reference Number to read as follows:

372-2011 Drinking Water System Components- Lead Content.....P2608.5, P2722.1, P2903.9.4, P2905.4, P2905.5, P2905.6, P2908.3

Further, **Article IV**, Registration, Permits and Inspections, **Section 4.02**, Commercial Site Plan and Permits Required, **Subsection (B)**, is hereby amended by the **deletion** of **Subsection (6)** and the **renumbering** of the remaining subsections:

Further, **Article IV**, **Section 4.02**, **Subsection (C)(1)**, is hereby amended by the **addition** of **Subsection (b)** so that hereafter said Subsection shall read as follows:

b. Flatwork (pedestrian sidewalks, vehicle parking and maneuvering areas) on private property.

2.

Any person, firm, corporation, agent or employee thereof who violates any of the provisions of this ordinance shall be guilty of a misdemeanor and upon conviction thereof shall be fined an amount not to exceed Two Thousand and No/100 Dollars ($2,000) for each offense. Each day that a violation is permitted to exist shall constitute a separate offense.

3.

This ordinance shall be and is hereby declared to be cumulative of all other ordinances of the City of Arlington; and this ordinance shall not operate to repeal or affect any of such other ordinances except insofar as the provisions thereof might be inconsistent or in conflict with the provisions of this ordinance, in which event such conflicting provisions, if any, in such other ordinance or ordinances are hereby repealed.

4.

If any section, subsection, sentence, clause or phrase of this ordinance is for any reason held to be unconstitutional, such holding shall not affect the validity of the remaining portions of this ordinance.

5.

All of the regulations provided in this ordinance are hereby declared to be governmental and for the health, safety and welfare of the general public. Any member of the City Council or any City official or employee charged with the enforcement of this ordinance, acting for the City of Arlington in the discharge of his/her duties, shall not thereby render himself/herself personally liable; and he/she is hereby relieved from all personal liability for any damage that might accrue to persons or property as a result of any act required or permitted in the discharge of his/her said duties.

6.

Any violation of this ordinance can be enjoined by a suit filed in the name of the City of Arlington in a court of competent jurisdiction, and this remedy shall be in addition to any penal provision in this ordinance or in the Code of the City of Arlington.

7.

The caption and penalty clause of this ordinance shall be published in a newspaper of general circulation in the City of Arlington, Texas, in compliance with the provisions of Article VII, Section 15, of the City Charter. Further, this ordinance may be

published in pamphlet form and shall be admissible in such form in any court, as provided by law.

8.

This ordinance shall become effective January 4, 2014, which is 30 days after the final adoption of the ordinance at the second reading on December 3, 2013.

PRESENTED AND GIVEN FIRST READING on the 19th day of November, 2013, at a regular meeting of the City Council of the City of Arlington, Texas; and GIVEN SECOND READING, passed and approved on the 3rd day of December, 2013, by a vote of 8 ayes and 0 nays at a regular meeting of the City Council of the City of Arlington, Texas.

ROBERT N. CLUCK, Mayor

ATTEST:

MARY W. SUPINO, City Secretary

APPROVED AS TO FORM:
JAY DOEGEY, City Attorney

BY

Ordinance No. 15-052

An ordinance amending the "Construction" Chapter of the Code of the City of Arlington, Texas, 1987, through the amendment of Article XVI, Dangerous Buildings, Section 16.04, Commencement of Hearing, Subsection (B), relative to scheduling a hearing for a historic property; Section 16.06, Contents of Order, by the deletion of Subsection (D) and the relettering of the remaining subsections; and Section 16.08, Liens for Penalties and Expenses, Subsection (B), relative to lien priority; providing this ordinance be cumulative; providing for severability, governmental immunity, injunctions, and publication; and becoming effective ten days after first publication

BE IT ORDAINED BY THE CITY COUNCIL OF THE CITY OF ARLINGTON, TEXAS:

1.

That the "**Construction**" Chapter of the Code of the City of Arlington, Texas, 1987, is hereby amended through the amendment of **Article XVI**, Dangerous Buildings, **Section 16.04**, Commencement of Hearing, **Subsection (B)**, so that hereafter said Subsection shall read as follows:

B. **Scheduling of Hearing**. The Administrator may schedule a public hearing:

1. When the Administrator has inspected any building or structure, other than an owner-occupied, single family dwelling, and has determined that such building is a dangerous building, and that such building is fifty (50) years old or older or located in a landmark preservation overlay zoning district, he shall report this determination to the local historic preservation board for review of the building pursuant to § 214.00111, Texas Local Government Code, or any successor statute, and the Administrator may thereafter schedule a hearing before the Hearing Authority as permitted by state law; or

2. When the Administrator has inspected any owner-occupied, single family dwelling and has determined that such building is a dangerous building, he may schedule a hearing before the Hearing Authority.

Further, **Article XVI**, **Section 16.06**, Contents of Order, is hereby amended by the deletion of Subsection (D) and the relettering of the remaining subsections so that hereafter said section shall be and read as follows:

Section 16.06 Contents of Order

A. An order issued by the Hearing Authority shall be in writing and shall set forth the decisions of the Hearing Authority made pursuant to Section 16.05(D).

B. An order to repair shall set forth those items that need to be repaired.

C. An order to vacate shall require the Administrator to post notice to vacate at or upon each entrance and exit of the building or structure in substantially the form described by Section 16.10.

D. An order shall be signed by the Municipal Court Judge.

E. A copy of the order shall be sent promptly after the hearing by certified mail, return receipt requested, to the owner of the building and to any lienholder or mortgagee of the building. If a notice is mailed according to this subsection and the United States Postal Service returns the notice as "refused" or "unclaimed", the validity of the notice is not affected, and the notice shall be deemed as delivered.

F. Within ten (10) days after the date the order is issued:

1. a copy of the order shall be filed in the office of the City Secretary; and

2. a notice shall be published in a newspaper of general circulation in the City, said notice containing:

a. the street address or legal description of the property;

b. the date of the hearing;

c. a brief statement indicating the results of the order; and

d. instructions stating where a complete copy of the order may be obtained.

Further, **Article XVI, Section 16.08**, Liens for Penalties and Expenses, Subsection (B), is hereby amended so that hereafter said subsection shall be and read as follows:

B. A lien imposed pursuant to this article is a privileged lien as provided by Local Government Code Chapter 214.

2.

This ordinance shall be and is hereby declared to be cumulative of all other ordinances of the City of Arlington; and this ordinance shall not operate to repeal or affect any of such other ordinances except insofar as the provisions thereof might be inconsistent or in conflict with the provisions of this ordinance, in which event such conflicting provisions, if any, in such other ordinance or ordinances are hereby repealed.

3.

If any section, subsection, sentence, clause or phrase of this ordinance is for any reason held to be unconstitutional, such holding shall not affect the validity of the remaining portions of this ordinance.

4.

All of the regulations provided in this ordinance are hereby declared to be governmental and for the health, safety and welfare of the general public. Any member of the City Council or any City official or employee charged with the enforcement of this ordinance, acting for the City of Arlington in the discharge of his/her duties, shall not thereby render himself/herself personally liable; and he/she is hereby relieved from all personal liability for any damage that might accrue to persons or property as a result of any act required or permitted in the discharge of his/her said duties.

5.

Any violation of this ordinance can be enjoined by a suit filed in the name of the City of Arlington in a court of competent jurisdiction, and this remedy shall be in addition to any penal provision in this ordinance or in the Code of the City of Arlington.

6.

The caption and penalty clause of this ordinance shall be published in a newspaper of general circulation in the City of Arlington, Texas, in compliance with the provisions of Article VII, Section 15, of the City Charter. Further, this ordinance may be published in pamphlet form and shall be admissible in such form in any court, as provided by law.

7.

This ordinance shall become effective ten (10) days after first publication as described above.

PRESENTED AND GIVEN FIRST READING on the 13th day of October, 2015, at a regular meeting of the City Council of the City of

Arlington, Texas; and GIVEN SECOND READING, passed and approved on the 27th day of October, 2015, by a vote of 9 ayes and 0 nays at a regular meeting of the City Council of the City of Arlington, Texas.

W. JEFF WILLIAMS, Mayor

ATTEST:

MARY W. SUPINO, City Secretary

APPROVED AS TO FORM:
TERIS SOLIS, City Attorney

BY

02/22/2017
02/24/2017

Ordinance No. 17-005

An ordinance amending the "Construction" Chapter of the Code of the City of Arlington, Texas, 1987, through the amendment of Article 4, Registrations, Permits and Inspections, relative to the addition of Section 4.145, Mobile Food Establishment Certificate of Occupancy, providing for the permitting of an accessory use tied to certain limited existing certificates of occupancy; and through the amendment of Article 13, Temporary Outdoor Events; relative to the revision of Section 13.04, Permit Required, revising the enforcement language in said section; and the addition of Section 13.12, Mobile Food Establishments, providing for the permitting of a mobile food establishment on private property at a temporary outdoor event; providing for a fine of up to $2,000.00 for each violation; providing this ordinance be cumulative; and providing for severability, governmental immunity, injunctions, publication, and an effective date

WHEREAS, the City Council has determined that it is in the best interest of the public and in support of the health, safety, morals and general welfare of the citizens that amendments relative to the permitting of Mobile Food Establishments, commonly referred to as "Food Trucks" be adopted to the "Construction" Chapter of the Code of the City of Arlington, Texas, 1987, be approved; NOW, THEREFORE,

BE IT ORDAINED BY THE CITY COUNCIL OF THE CITY OF ARLINGTON, TEXAS:

1.

THAT the **"Construction"** Chapter of the Code of the City of Arlington, Texas, 1987, **Article 4**, Registrations, Permits and Inspections, is hereby amended by the addition of **Section 4.145**, Mobile Food Establishment Certificate of Occupancy, so that said Section 4.145 shall be and read as follows:

Section 4.145 **Mobile Food Establishment Certificate of Occupancy**

A. It shall be unlawful for a person or entity to own or operate a mobile food establishment on private property within the City of Arlington without a valid mobile food establishment certificate of occupancy ("MFE-CO") tied to an appropriate certificate of occupancy in an approved underlying land use, or as part of a preapproved temporary outdoor event (under Section 13.12, herein). A mobile food establishment is commonly referred to as a "food truck" and shall be

capable of immediate mobility by use of a licensed motor vehicle. This definition shall include the term "mobile food unit" under state law, including the Texas Food Establishment Rules, or its successor statute.

B. The holder of a valid certificate of occupancy granted under Section 4.14 above may apply for a MFE-CO to be tied to the underlying certificate of occupancy if the existing underlying certificate of occupancy is for one of the following nonresidential uses:

1. Restaurant;
2. Bar;
3. Microbrewery, microdistillery, and winery; and
4. Theatre.

C. A MFE-CO may only be approved for a property located in a Downtown Business (DB) zoning use district or within a non-residential or mixed-use zoning use district located in the Downtown Neighborhood Overlay (DNO). Said zoning use districts are defined in the "Unified Development Code" Chapter of the Arlington City Code.

D. An MFE-CO shall only remain valid as long as the corresponding underlying certificate of occupancy. If the underlying certificate of occupancy expires, ceases to operate, or is revoked for any reason, the validity of the MFE-CO shall also automatically terminate without notice or any further action of the City.

E. An MFE-CO may only be approved for operation on properties that have sufficient restroom facilities for their customers within the underlying property use, together with the additional customers of the mobile food establishment.

F. It shall be unlawful for any mobile food establishment to operate, park, stand, or remain on any public street, alley, or right-of-way unless part of a preapproved event sponsored by the City of Arlington.

G. It shall be unlawful for any mobile food establishment to operate without a current, valid health permit issued by the City of Arlington.

H. The underlying property owner (holder of a MFE-CO) shall be responsible for ensuring that any mobile food establishment that operates on the property has a valid motor vehicle operator license, valid vehicle registration, proof of vehicle liability insurance, and a validly issued Texas Sales Tax Permit.

I. The underlying property owner (holder of a MFE-CO) shall be responsible for maintaining a log on a form prescribed by the Department of Community Development and Planning. It shall be unlawful for the holder of a MFE-CO to fail to record and maintain on said log the name and contact information of every mobile food establishment that has operated on the premises of the underlying

property owner during the past and the corresponding dates of their operation. It shall be unlawful for the holder of a MFE-CO, or his representative, to fail to provide access to said logs upon request by a representative of the City of Arlington.

J. It shall be unlawful for a mobile food establishment to operate if the underlying certificate of occupancy holder is closed. If for any reason the underlying business must close its doors, all mobile food establishment operations must cease immediately.

K. It shall be unlawful for a mobile food establishment to remain on the premises of a MFE-CO holder for longer than 24 consecutive hours.

L. It shall be unlawful for a mobile food establishment to operate an electric generator on the premises of a MFE-CO holder. An approved electric line must be provided by the MFE-CO holder for use by a mobile food establishment.

Further, **Article 13**, Temporary Outdoor Events, is hereby amended by the revision of **Section 13.04,** Permit Required, so that said section shall apply to all parties producing an outdoor event, and **Section 13.04** shall be and read as follows:

Section 13.04 **Permit Required**

A. No person or applicant may direct, control or participate in the production of a temporary outdoor event unless a valid permit for the event has been issued as provided in this Article.

B. No person or applicant may direct, control or participate in the production of temporary outdoor event in violation of the terms and conditions of a valid permit issued in accordance with this Article.

C. Nothing contained herein shall be construed as relieving an applicant from duties or permits required by other provisions of the Code of the City of Arlington, including, but not limited to, ordinances regulating the sale of food and beverage or closure of streets and the obtaining of permits and payment of fees.

Further, **Article 13**, Temporary Outdoor Events, is hereby amended by the addition of **Section 13.12,** Mobile Food Establishments "Food Truck", so that said **Section 13.12** shall be and read as follows:

Section 13.12 **Mobile Food Establishment ("Food Truck")**

A temporary outdoor event permit may be approved with the addition of (or solely for the purpose of permitting the lawful operation of) a mobile food establishment on private property within the City of Arlington.

Both the applicant and any person operating a mobile food establishment may be held responsible under both civil and criminal penalties for any violation of any of the provisions of Article 13 herein, or Article 4, Section 4.145 herein, or of Article 4, Regulation of Food Establishments, of the "Health and Sanitation" Chapter, as amended, of the Arlington City Code.

2.

Any person, firm, corporation, agent or employee thereof who violates any of the provisions of this ordinance shall be guilty of a misdemeanor and upon conviction thereof shall be fined an amount not to exceed Two Thousand Dollars and No Cents ($2,000.00) for each offense. Each day that a violation is permitted to exist shall constitute a separate offense.

3.

This ordinance shall be and is hereby declared to be cumulative of all other ordinances of the City of Arlington; and this ordinance shall not operate to repeal or affect any of such other ordinances except insofar as the provisions thereof might be inconsistent or in conflict with the provisions of this ordinance, in which event such conflicting provisions, if any, in such other ordinance or ordinances are hereby repealed.

4.

If any section, subsection, sentence, clause or phrase of this ordinance is for any reason held to be unconstitutional, such holding shall not affect the validity of the remaining portions of this ordinance.

5.

All of the regulations provided in this ordinance are hereby declared to be governmental and for the health, safety and welfare of the general public. Any member of the City Council or any City official or employee charged with the enforcement of this ordinance, acting for the City of Arlington in the discharge of his/her duties, shall not thereby render himself/herself personally liable; and he/she is hereby relieved from all personal liability for any damage that might accrue to persons or property as a result of any act required or permitted in the discharge of his/her said duties.

6.

Any violation of this ordinance can be enjoined by a suit filed in the name of the City of Arlington in a court of competent jurisdiction, and this remedy shall be in addition to any penal provision in this ordinance or in the Code of the City of Arlington.

7.

The caption and penalty of this ordinance shall be published in a newspaper of general circulation in the City of Arlington, Texas, in compliance with the provisions of Article VII, Section 15, of the City Charter. Further, this ordinance may be published in pamphlet form and shall be admissible in such form in any court, as provided by law.

8.

This ordinance shall become effective ten days after first publication.

PRESENTED AND GIVEN FIRST READING on the 24th day of January, 2017, at a regular meeting of the City Council of the City of Arlington, Texas; and GIVEN SECOND READING, passed and approved on the 14th day of February, 2017, by a vote of 8 ayes and 0 nays at a regular meeting of the City Council of the City of Arlington, Texas.

W. JEFF WILLIAMS, Mayor

ATTEST:

MARY W. SUPINO, City Secretary

APPROVED AS TO FORM:
TERIS SOLIS, City Attorney

BY

04/15/18
04/18/18

Ordinance No. 18-017

An ordinance amending the "Construction" Chapter of the Code of the City of Arlington, Texas, 1987, through the amendment of Article I, Building Code, Sections 1.01 through 1.05, relative to adopting the 2015 Editions of the International Building Code, International Existing Building Code, International Residential Code, and the International Energy Conservation Code; adopting local amendments and associated appendices; through the repeal of Section 1.08(C), relative to enforcement of violations of this Chapter; through the amendment of Article IV, Registration, Permits and Inspections, Section 4.02, Commercial Site Plan and Permits Required, Subsection (A) and the addition of Subsection (H), relative to building permit requirements; and through the amendment of Section 4.14, Certificate of Occupancy, Subsection (B), relative to certificate of occupancy requirements; providing for a fine of up to $2,000.00 for each violation; providing this ordinance be cumulative; and providing for severability, governmental immunity, injunctions, publication, and an effective date

WHEREAS, after receipt of public comment in accordance with Section 214.217 of the Texas Local Government Code, and upon the advice and recommendation of the Building Code Board of Appeals, the City Council finds that it is in the public interest to adopt updated building codes for the preservation of public safety and the general welfare of its citizens; NOW, THEREFORE,

BE IT ORDAINED BY THE CITY COUNCIL OF THE CITY OF ARLINGTON, TEXAS:

1.

That the **"Construction"** Chapter of the Code of the City of Arlington, Texas, 1987, as amended, **Article I**, Building Code, **Sections 1.01 through 1.05**, are hereby repealed and replaced in their entirety and shall hereafter reads as follows:

ARTICLE I

BUILDING CODE

Section 1.01 Title

This Chapter shall be known as the "Construction" Chapter of the Arlington City Code. Article I shall be known as the "Building Code" of the City of Arlington and shall incorporate the herein referenced and adopted Editions of the International Code, as published by the International Code Council, Inc.

Section 1.02 Adoption of Code

The International Building Code, 2015 Edition (hereinafter called "I.B.C."); the International Existing Building Code, 2015 Edition (hereinafter called "I.E.B.C."); the International Residential Code, 2015 Edition (hereinafter called "I.R.C."); and the International Energy Conservation Code, 2015 Edition (hereinafter called "I.E.C.C."); as published by the International Code Council, Inc. are hereby adopted and designated, together with the deletions, amendments and addenda hereinafter contained, as the Building Code of the City of Arlington, the same as though said I.B.C., I.E.B.C., I.R.C. and I.E.C.C. were copied at length herein. Copies of the I.B.C., I.E.B.C., I.R.C. and I.E.C.C. and their Appendices shall be kept on file in the Office of the City Secretary.

The adoption of the 2015 I.R.C. as stated herein except that Section R313 of the 2003 I.R.C., as amended and originally adopted on August 23, 2005 by Ordinance No. 05-068, to read as follows is maintained:

R313.1 Fire sprinkler system. All R3 and U occupancies are required to have an approved fire sprinkler system.

Exception: Buildings with an approved fire department access.

Section 1.03 Code Defined; Rule of Construction

This Building Code shall include all of the provisions of the I.B.C., I.E.B.C., I.R.C. and I.E.C.C. as adopted by Section 1.02 above and all other provisions contained herein. In the event a conflict is determined to exist between said I.B.C., I.E.B.C., I.R.C. and I.E.C.C. as adopted and the other provisions of this Chapter, the provisions of this Chapter control. Items regulated by permit located on residential lots that are not specifically referenced in the I.R.C. are regulated by the I.B.C or I.E.B.C.

Section 1.04 Amendments, Additions and Deletions

The adoption of the I.B.C, I.E.B.C., I.R.C. and I.E.C.C., as provided in Section 1.02 above, is modified and amended by the following:

A. The addition thereto of Articles II, et seq., of this Chapter.

B. The deletion in the entirety of the following provisions of the I.B.C., I.E.B.C., I.E.C.C., and I.R.C.:

1. Sections 105 I.B.C., 105 I.E.B.C and 105 I.R.C., entitled **Permits**;
2. Section 107 I.B.C. entitled **Submittal Documents**, Section 106 I.E.B.C. entitled **Construction Documents** and Section 106 I.R.C. entitled **Construction Documents.**
3. Sections 109 I.B.C., 108 I.E.B.C., 108 I.R.C. and 107 I.E.C.C, entitled **Fees**;
4. Sections 110 I.B.C., 109 I.E.B.C. and 109 I.R.C., entitled **Inspections**;
5. Sections 111 I.B.C., 110 I.E.B.C. and 110 I.R.C., entitled **Certificate of Occupancy**;
6. Sections 113 I.B.C., 112 I.E.B.C., 112 I.R.C. and 109 I.E.C.C, entitled **Board of Appeals**;
7. Sections 114 I.B.C., 113 I.E.B.C. and 113 I.R.C., entitled **Violations**;
8. Sections 116 I.B.C. and 115 I.E.B.C. entitled **Unsafe Structures and Equipment**;
9. Section 2503 I.B.C., entitled **Inspection**;
10. and all of Chapters 34 through 43 of the I.R.C.

C. The amendment of the following I.B.C. provisions:

1. The amendment of Section 101.1, entitled **Title**, to read as follows:

   101.1 Title. These regulations shall be known as the Building Codes of the City of Arlington, Texas, hereinafter referred to as "this code."

2. The amendment of the Exceptions to Section 101.2, entitled **Scope**, to read as follows:

   Exceptions:

   1. Detached one- and two-family dwellings and multiple single-family dwellings (townhouses) not more than three stories above grade plane in height with a separate means of egress and their accessory structures shall comply with the International Residential Code.

   2. Portable and/or temporary storage buildings not exceeding three hundred twenty (320) square feet in area shall not be subject to the provisions of this Building Code for foundations and framing provided:

      (a) The building shall not be intended or used for human occupancy;

(b) No plumbing and/or mechanical improvements shall be permitted and any electrical improvements are supervised by permits and work shall be installed in full compliance with the appropriate Chapter of the Code of the City of Arlington for such work; and

(c) A permit for such building shall have been obtained from the Building Official.

3. The amendment of Section 101.4, entitled **Referenced codes**, to read as follows:

101.4 Referenced codes. The other codes listed in Sections 101.4.1 through 101.4.8 and referenced elsewhere in this code, when specifically adopted, shall be considered part of the requirements of this code to the prescribed extent of each such reference. Whenever amendments have been adopted to the referenced codes and standards, each reference to said code and standard shall be considered to reference the amendments as well. Any reference to NFPA 70 or the Electrical Code shall mean the Electrical Code as adopted.

4. The amendment of Section 101.4, entitled **Referenced codes**, to add a new section 101.4.8, entitled **Electrical**, to read as follows:

101.4.8 Electrical. The provisions of the Electrical Code shall apply to the installation of electrical systems, including alterations, repairs, replacement, equipment, appliances, fixtures, fittings and appurtenances thereto.

5. The amendment of Section 103 and 103.1 to read as follows:

SECTION 103
DIVISION OF BUILDING INSPECTIONS

103.1 Creation of enforcement agency. The Division of Building Inspections is hereby created and the official in charge thereof shall be known as the Building Official.

6. The amendment of Section 104.6, entitled **Right of Entry**, to read as follows:

104.6 Right of Entry. Where it is necessary to make an inspection to enforce any of the provisions of this Building Code, or whenever the Building Official or an authorized representative has reasonable cause to believe that there exists in any building or upon any premises any condition or violation which makes such building or premises unsafe, dangerous or hazardous, the Building Official or an authorized representative may enter

such building or premises at all reasonable times to inspect the same or to perform any duty imposed upon said Building Official by this Building Code. If such building or premises is occupied, the Building Official or an authorized representative shall first present credentials and request entry. If such building or premises is unoccupied, the Building Official shall first make a reasonable effort to locate the owner or other person having charge or control of the building or premises and request entry. If such entry is refused, or, if no owner or other person having charge or control of the building or premises can be located, the Building Official or an authorized representative shall have recourse to every remedy provided by law to secure entry.

7. The deletion of Section 104.10.1, entitled **Flood Hazard Areas**, in its entirety.

8. The addition of Section 104.12, entitled **Occupancy Violations**, to read as follows:

104.12 Occupancy Violations. Whenever any building, structure, or equipment therein which is regulated by this Building Code is being used contrary to the provisions of said Code, the Building Official or an authorized representative may order that such use be discontinued and/or that the building or structure, or a portion thereof, be vacated by written notice served on any person who is causing such use to be continued. Further, the Building Official or an authorized representative may order the evacuation of any building or premises, or a portion thereof, which constitutes a dangerous building as defined in Article XVI of this Chapter.

Notice to stop use shall be given by personal delivery or by certified mail, return receipt requested, to the person responsible for the continued use. Such person shall discontinue the use within the time prescribed by the Building Official after receipt of such notice and shall not resume the use of the building or premises until first rendering the same in compliance with this Building Code.

Notice to vacate a dangerous building or premises shall be posted at or upon each exit of the said structure affected thereby, and shall be in substantially the following form:

"DO NOT ENTER
UNSAFE TO OCCUPY

It is a misdemeanor to occupy this building,
or to remove or deface this notice.

Arlington Building Official
(by)_____
(date)_____
(compliance due date) _____"

No person shall remain in or enter any building or premises which has been so posted, except that entry may be made to repair, demolish or remove the unsafe condition. Such entry or the destruction, defacing or removal of said notice prior to approval by the Building Official or an authorized representative shall be a violation of this Building Code.

9. The amendment of Section 115, entitled **STOP WORK ORDER**, to read as follows:

SECTION 115
STOP WORK ORDER

115.1 Stop Work Order. Whenever any work is being done contrary to the provisions of this Code, the Building Official may order the work stopped by notice in writing served on any persons engaged in the doing or causing such work to be done. Any such person shall forthwith stop such work until:

a. He or she is authorized by the Building Official to proceed with the work; or

b. An appeal perfected pursuant to Section 2.06 of Article II has resulted in a waiver of the condition causing the stop order, or a finding that there is no cause for a stop order. Failure to stop such work, in addition to penalties and remedies elsewhere set forth, shall void any appeal.

10. The amendment of Section 202, entitled **DEFINITIONS**, by amending the following definitions found therein to read as follows:

AMBULATORY CARE FACILITY. Buildings or portions thereof used to provide medical, surgical, psychiatric, nursing or similar care on a less than 24-hour basis to individuals who are rendered incapable of self-

preservation. This group may include, but not necessarily be limited to, the following:
- Dialysis centers
- Sedation dentistry
- Surgery centers
- Colonic centers
- Psychiatric centers

ASSISTED LIVING FACILITIES. A building or part thereof housing persons, on a 24-hour basis, who because of age, mental disability or other reasons, live in a supervised residential environment which provides personal care services. The occupants are capable of responding to an emergency situation without physical assistance from staff.

ATRIUM. An opening connecting three or more stories other than enclosed stairways, elevators, hoistways, escalators, plumbing, electrical, air-conditioning or other equipment, which is closed at the top and not defined as a mall. Stories, as used in this definition, do not include balconies within assembly groups or mezzanines that comply with Section 505.

BASE FLOOD ELEVATION. The elevation of the *base flood,* including wave height, relative to the National Geodetic Vertical Datum (NGVD), North American Vertical Datum (NAVD) or other datum specified on the Flood Insurance Rate Map (FIRM) and found in the accompanying Flood Insurance Study (FIS) for Zones A, AE, AH, A1-A30, or AR that indicates the water surface elevation resulting from the flood that has a 1% chance of equaling or exceeding that level in any given year.

DESIGN FLOOD. The *flood* associated with the greater of the following two areas:

1. Area that is subject to a 1-percent or greater chance of flooding in any year based upon fully urbanized land conditions.
2. Area designated as a *special flood hazard area* on a community's flood hazard map or otherwise adopted by resolution as a regulatory floodplain.

EXISTING CONSTRUCTION. Any buildings and structures for which the "start of construction" commenced before the effective date of the initial FIRM (December 31, 1974). "Existing construction" may also be referred to as "existing structures."

FLOOD HAZARD AREA. The greater of the following two areas:

1. Area that is subject to a 1-percent or greater chance of flooding in any year based upon fully urbanized land conditions.

2. Area designated as a *special flood hazard area* on a community's flood hazard map or otherwise adopted by resolution as a regulatory floodplain.

SPECIAL INSPECTOR. A qualified person employed or retained by an approved agency who shall prove to the satisfaction of the registered design professional in responsible charge and approved by the Building Official as having the competence necessary to inspect a particular type of construction requiring special inspection.

SUBSTANTIAL DAMAGE. Damage of any origin sustained by a structure whereby the cost of restoring the structure to its before-damaged condition would equal or exceed 25 percent of the market value of the structure one day before the damage occurred. Please refer to the definition of "SUBSTANTIAL IMPROVEMENT".

SUBSTANTIAL IMPROVEMENT. Any repair, reconstruction, rehabilitation, addition or improvement of a building or structure, the cost of which equals or exceeds 25 percent of the market value of the structure before the "start of construction" of the improvement. If the structure has sustained substantial damage, any repairs are considered substantial improvement regardless of the actual repair work performed. The term does not, however, include either:

1. Any project for improvement of a building required to correct existing health, sanitary or safety code violations identified by the building official and that are the minimum necessary to assure safe living conditions.
2. Any alteration of a historic structure provided that the alteration will not preclude the structure's continued designation as a historic structure.

11. The amendment of Section 202, entitled **DEFINITIONS**, by adding the following definitions to read as follows:

MULTI-UNIT RENTAL COMPLEX is two or more dwelling units in one or more buildings that are under common ownership, managed by the same owner, managing agent, or management company, and located on the same lot or tract of land or adjacent lots or tracts of land. The term includes a condominium project. The term does not include:

(A) A facility primarily renting rooms to overnight guests; or

(B) A single-family home or adjacent single-family homes that are not part of a condominium project.

POOL DECK is a flat walking surface consisting of wood, stone, brick, concrete or other similar material located within five feet (5′) of the water's edge of a swimming pool or spa.

PROPERTY OWNERS ASSOCIATION is an association of property owners for a residential subdivision, condominium, cooperative, townhouse project, or other project involving residential dwellings.

REPAIR GARAGE. A building, structure, or portion thereof used for servicing or repairing motor vehicles. This occupancy shall also include garages involved in minor repair, modification and servicing of motor vehicles for items such as lube changes, inspections, windshield repair or replacement, shocks, minor part replacement and other such minor repairs.

SELF-CLOSING GATE is a gate, which closes or shuts automatically, without the aid of human, electrical, solar or battery power after being opened.

SELF-CLOSING AND SELF-LATCHING DEVICE is a device that causes a gate to automatically close and latch without human, electrical, solar or battery power.

SHALL, as it applies to an act or duty to be performed by the Building Official pursuant to any section of this Building Code, is discretionary. Its use in all other applications in this Code shall be mandatory.

12. The amendment of Section 202, entitled **DEFINITIONS**, by deleting the following definition:

FLOOD HAZARD AREA SUBJECT TO HIGH VELOCITY WAVE ACTION

13. The amendment of Section 303.1.3, entitled **Associated with Group E occupancies**, to read as follows:

303.1.3 Associated with Group E occupancies. A room or space used for assembly purposes that is associated with a Group E occupancy is not considered a separate occupancy. Except when applying the assembly requirements of Chapter 10 and 11.

14. The amendment of Section 304.1, entitled **Business Group B**, to read as follows:

304.1 Business Group B. Business Group B occupancy includes, among others, the use of a building or structure, or a portion thereof, for office, professional or service-type transactions, including storage of records and

accounts. Business occupancies shall include, but not be limited to, the following:

Airport traffic control towers
Ambulatory health care facilities
Animal hospitals, kennels and pounds
Banks
Barber and beauty shops
Car wash
Civic administration
Clinic, outpatient
Dry cleaning and laundries; pick-up and delivery stations and self-service
Educational occupancies above the 12th grade
Electronic data processing
Fire Stations
Laboratories; testing and research
Motor vehicle showrooms
Police stations with detention facilities for 5 or less
Post offices
Print shops
Professional services (architects, attorneys, dentists, physicians, engineers, etc.)
Radio and television stations
Restaurants with no dine-in facilities (take-out or delivery only)
Telephone exchanges

15. The amendment of Exception 4 to Section 307.1, entitled **High-hazard Group H**, to read as follows:

    4. Cleaning establishments that utilize combustible liquid solvents having a flash point of 140°F (60°C) or higher in closed systems employing equipment listed by an approved testing agency, provided that this occupancy is separated from all other areas of the building by 1-hour fire barriers constructed in accordance with Section 707, or 1-hour horizontal assemblies constructed in accordance with Section 711, or both. See also Chapter 21, Dry Cleaning Plant provision of the Fire Code.

16. The amendment of Section 310.5, entitled **Residential Group R**, more specifically the paragraphs entitled **R-3** to read as follows:

R-3 Residential occupancies where the occupants are primarily permanent in nature and not classified as R-1, R-2, R-4 or I, including:

Buildings that do not contain more than two dwelling units.
Adult care facilities that provide accommodations for five or fewer persons of any age for less than 24 hours.
Child care facilities that provide accommodations for five or fewer persons of any age for less than 24 hours.
Congregate living facilities with 16 or fewer persons.
Adult care and child care facilities with five or fewer unrelated persons that are within a single-family home are permitted to comply with the International Residential Code.

17. The amendment of Section 311.2, entitled **Moderate-hazard storage, Group S-1**, to add the use classification "Self Service Storage Facility."

18. The amendment of Section 403.1, entitled **Applicability**, to amend Exception 3 to read as follows:

    3. The *open air* portion of a building containing a Group A-5 occupancy in accordance with Section 303.6.

19. The amendment of Section 403.3, entitled **Automatic sprinkler system**, by the deletion of Exception 2.

20. The amendment of Section 403.3.2, entitled **Water supply to required fire pumps**, to read as follows:

    403.3.2 Water supply to required fire pumps. In buildings that are more than 120 feet (36.5 m) in building height, required fire pumps shall be supplied by connections to no fewer than two water mains located in different streets. Separate supply piping shall be provided between each connection to the water main and the pumps. Each connection and the supply piping between the connection and the pumps shall be sized to supply the flow and pressure required for the pumps to operate.

    Exception: Two connections to the same main shall be permitted provided that the main is valved such that an interruption can be isolated so that the water supply will continue without interruption through no fewer than one of the connections.

21. The amendment of Section 404.5, entitled **Smoke control**, by the deletion of the Exception.

22. The amendment of Section 406.3.5.1, entitled **Carport separation**, to add a sentence to read as follows:

    406.3.5.1 Carport Separation. A separation is not required between a Group R-3 and U carport, provided the carport is entirety open on two or

more sides and there are not enclosed areas above. A fire separation is not required between a Group R-2 and U carport provided that the carport is entirely open on all sides and that the distance between the two is at least 10 feet (3048 mm).

23. The amendment of the Exception to Section 411.4, entitled **Automatic sprinkler system,** to read as follows:

> Exception: An automatic sprinkler system need not be provided for amusement buildings actually operating not more than thirty (30) consecutive days.

24. The amendment of Section 411.7.1, entitled **Photo luminescent exit signs,** to read as follows:

411.7.1 Photo luminescent exit signs. Photo luminescent exit signs are prohibited.

25. The amendment of Section 416.5 entitled **Fire protection,** to read as follows:

416.5 Fire protection. An automatic fire-extinguishing system shall be provided in all spray, dip and immersing spaces and storage rooms and shall be installed in accordance with Chapter 9 for both existing and new spray, dip and immersing spaces and storage rooms.

26. The amendment of Section 423.3, entitled **Critical Emergency Operations**, by deleting it in its entirety.

27. The amendment of Section 423.4, entitled **Group E occupancies**, to add Section 423.4.1 to read as follows:

423.4.1 Group E occupancies. In areas where the shelter design wind speed for tornados is 250 MPH in accordance with Figure 304.2(1) of ICC 500, all new buildings for Group E occupancies with an aggregate occupant load of 50 or more shall have a storm shelter constructed in accordance with ICC 500. The shelter shall be capable of housing the total occupant load of the Group occupancy.

28. The amendment of Section 506.3.2, entitled **Minimum frontage distance**, to add Section 506.3.2.1 to read as follows:

506.3.2.1 Open space limits. Such open space shall be either on the same lot or dedicated for public use and shall be accessed from a street or approved fire lane. In order to be considered as accessible, if not in direct contact with a street or an approved fire lane, a minimum ten (10) foot wide

pathway adjoining fire department access from the street or approved fire lane shall be provided.

29. The amendment of Table 602, entitled **FIRE-RESISTANCE RATING REQUIREMENTS FOR EXTERIOR WALLS BASED ON FIRE SEPARATION DISTANCE**[ae], to insert footnote h. to the heading "OCCUPANCY GROUP A, B, E, F-2, I, R[h], S-2[g], U[bh]" to read as follows:

    h. For one- and two-family dwellings and apartment buildings, open metal carport structures may be constructed within zero (0) feet of the property line without fire-resistive or opening protection when the location of such is approved as required by other City ordinances.

30. The amendment of Section 712.1.9, entitled **Two-story opening**, to change Item 4 to read as follows:

    4. Is not open to a corridor in Group I and H occupancies.

31. The amendment of Section 901.6.1, entitled **Automatic sprinkler systems**, to add Section 901.6.1.1 to read as follows:

    901.6.1.1 Standpipe Testing. Building owners/managers must maintain and test standpipe systems as per NFPA 25 requirements. The following additional requirements shall be applied to the testing that is required every 5 years:

    1. The piping between the Fire Department Connection (FDC) and the standpipe shall be backflushed when foreign material is present, and also hydrostatically tested for all FDC's on any type of standpipe system. Hydrostatic testing shall also be conducted in accordance with NFPA 25 requirements for the different types of standpipe systems.

    2. For any manual (dry or wet) standpipe system not having an automatic water supply capable of flowing water through the standpipe, the tester shall connect hose from a fire hydrant or portable pumping system (as approved by the fire code official) to each FDC, and flow water through the standpipe system to the roof outlet to verify that each inlet connection functions properly. Confirm that there are no open hose valves prior to introducing water into a dry standpipe. There is no required pressure criteria at the outlet. Verify that check valves function properly and that there are no closed control valves on the system.

    3. Any pressure relief, reducing, or control valves shall be tested in accordance with the requirements of NFPA 25. All hose valves shall be exercised.

4. If the FDC is not already provided with approved caps, the contractor shall install such caps for all FDC's as required by the fire code official.

5. Upon successful completion of standpipe test, place a blue tag (as per Texas Administrative Code, Fire Sprinkler Rules for Inspection, Test and Maintenance Service (ITM) Tag) at the bottom of each standpipe riser in the building. The tag shall be check-marked as "Fifth Year" for Type of ITM, and the note on the back of the tag shall read "5 Year Standpipe Test" at a minimum.

6. The procedures required by Texas Administrative Code Fire Sprinkler Rules with regard to Yellow Tags and Red Tags or any deficiencies noted during the testing, including the required notification of the local Authority Having Jurisdiction (fire code official) shall be followed.

7. Additionally, records of the testing shall be maintained by the owner and contractor, if applicable, as required by the State Rules mentioned above and NFPA 25.

8. Standpipe system tests where water will be flowed external to the building shall not be conducted during freezing conditions or during the day prior to expected night time freezing conditions.

9. Contact the fire code official for requests to remove existing fire hose from Class II and III standpipe systems where employees are not trained in the utilization of this firefighting equipment. All standpipe hose valves must remain in place and be provided with an approved cap and chain when approval is given to remove hose by the fire code official.

32. The amendment of Section 902.1, entitled **Definitions**, by the amendment of the definition of **STANDPIPE, TYPES OF,** under **Manual dry** as referenced in Section 202, to read as follows:

Manual dry. A dry standpipe system that does not have a permanent water supply attached to the system. Manual dry standpipe systems require water from a fire department pumper to be pumped into the system through the fire department connection in order to supply the system demand. The system must be supervised as specified in Section 905.9.

33. The amendment of Section 903.1.1, entitled **Alternative protection**, to read as follows:

903.1.1 Alternative protection. Alternative automatic fire-extinguishing systems complying with Section 904 shall be permitted in addition to automatic sprinkler protection where recognized by the applicable standard, or as approved by the fire code official.

34. The amendment of Section 903.2, entitled **Where required**, to add the following and delete the Exception:

903.2 Where required. Approved automatic sprinkler systems in new buildings and structures shall be provided in the locations described in Sections 903.2.1 through 903.2.12. Automatic Sprinklers shall not be installed in elevator machine rooms, elevator machine spaces, and elevator hoistways, other than pits where such sprinklers would not necessitate shunt trip requirements under any circumstances. Storage shall not be allowed within the elevator machine room. Signage shall be provided at the entry doors to the elevator machine room indicating "ELEVATOR MACHINERY – NO STORAGE ALLOWED."

35. The amendment addition of Section 903.2.1, entitled **Group A**, to add a new Section 903.2.1.8 to read as follows:

903.2.1.8 Special amusement building. Special amusement buildings shall be equipped throughout with an automatic sprinkler system.

Exception: An automatic sprinkler system need not be provided when an amusement building shall be in existence less than 30 days and when the construction and use is approved by the Fire Code Official or authorized representative.

36. The amendment of Item 2 under Section 903.2.4, entitled **Group F-1**, to read as follows:

2. A Group F-1 fire area is located more than two stories above grade plane.

37. The amendment of Section 903.2.9, entitled **Group S-1**, to add a new Section 903.2.9.3, to read as follows:

903.2.9.3 Self-service storage facility. An automatic sprinkler system shall be installed throughout all self-service storage facilities.

Exception: One story self-service storage facilities, that have no interior corridors, with a one-hour fire barrier wall installed between every storage compartment.

38. The amendment of Section 903.2.11.3, entitled **Buildings 55 feet or more in height**, to read as follows and Exception 1 is deleted:

903.2.11.3 Buildings over two stories in height. An automatic sprinkler system shall be installed throughout buildings, other than penthouses in compliance with Section 1509 of the International Building Code, that is

located 55 feet or more above the lowest level of fire department vehicle access.

39. The amendment of Section 903.2.11, entitled **Specific building areas and hazards**, to add a new Section 903.2.11.7 to read as follows:

903.2.11.7 High-Piled Combustible Storage. For any building with a clear height exceeding 12 feet (4572 mm), see Chapter 32 of the Fire Code to determine if those provisions apply.

40. The amendment of Section 903.2.11, entitled **Specific building areas and hazards**, to add a new Section 903.2.11.8 to read as follows:

903.2.11.8 Spray Booths and Rooms. New and existing spray booths and spraying rooms shall be protected by an approved automatic fire-extinguishing system.

41. The amendment of Section 903.3.1.1.1, entitled **Exempt locations**, to read as follows:

903.3.1.1.1 Exempt locations. When approved by the fire code official, automatic sprinklers shall not be required in the following rooms or areas where such rooms or areas are protected with an approved automatic fire detection system in accordance with Section 907.2 that will respond to visible or invisible particles of combustion. Sprinklers shall not be admitted from a room merely because it is damp, of fire-resistance-rated construction or contains electrical equipment.

1. Any room where the application of water, or flame and water, constitutes a serious life or fire hazard.
2. Any room or space where sprinklers are considered undesirable because of the nature of the contents, when approved by the code official.
3. Generator and transformer rooms, under the direct control of a public utility, separated from the remainder of the building by walls and floor/ceiling or roof/ceiling assemblies having a fire-resistance rating of not less than 2 hours.
4. {Deleted}
5. Elevator machine rooms, machinery spaces, and hoistways, other than pits where such sprinklers would not necessitate shunt trip requirements under any circumstances.
6. {Deleted}

42. The amendment of Section 903.3.1.2, entitled **NFPA 13R sprinkler systems**, to read as follows:

903.3.1.2 NFPA 13R sprinkler system. Required automatic sprinkler systems in Group R occupancies of four stories or less may be hydraulically calculated within the dwelling units in accordance with NFPA 13R and as amended by this code. Sprinkler protection shall be provided throughout, including the means of egress, patios, bathrooms, closets, balconies and attics.

Exceptions:

1. A fire department connection (FDC) is not required for one and two-family dwellings.
2. A required system for one and two-family dwellings may be hydraulically calculated using the standard for a 13D sprinkler system.
3. A required system for one and two-family dwellings may use materials that meet the standard for a 13D sprinkler system.

43. The amendment of Section 903.3.1.2, entitled **NFPA 13R sprinkler systems**, to add a new Section 903.3.1.2.3, entitled **Attics and Attached Garages**, to read as follows:

Section 903.3.1.2.3 Attics and Attached Garages. Sprinkler protection is required in attic spaces of such buildings two or more stories in height, in accordance with NFPA 13 and or NFPA 13R requirements, and in attached garages.

44. The amendment of Section 903.3.1.3, entitled **NFPA 13D sprinkler systems**, to read as follows:

903.3.1.3 NFPA 13D sprinkler systems. Non-required automatic sprinkler systems in one and two-family dwellings and manufactured homes may be installed in accordance with NFPA 13D or in accordance with state law.

45. The amendment of Section 903.3.5, entitled **Water supplies**, to add a second paragraph to read as follows:

Water supply as required for such systems shall be provided in conformance with the supply requirements of the respective standards; however, every fire protection system shall be designed with a 10-psi safety factor. Reference Section 507.4 for additional design requirements.

46. The amendment of Section 903.3.7, entitled **Fire department connections**, to read as follows:

903.3.7 Fire department connections. The location of fire department connections shall be approved by the Fire Code Official. All fire department connections in the City of Arlington shall be 4" Storz

connections. The permanent Storz adapter shall be constructed of high strength, light weight, corrosion resistant aluminum alloy capable of being securely attached to standpipe/sprinkler outlets designed for fire department Storz connections. The Storz lug connection shall conform to industry standards. The hose sealing surface shall consist of a machined metal seat to eliminate rubber gaskets, coated to protect against long term exposure to the environment. The Storz connection shall connect to the pipe outlet using National Standard Thread. The connection shall be angled downward at a 30° angle. A semi-permanent ¼" mesh screen shall be provided inside the Storz adapter, constructed of corrosion resistant metal. A 4" Storz aluminum cap with chain or cable shall be provided for the fire department connection. For each additional 1500 G.P.M. required or fraction thereof an additional 4" Storz connection is required.

47. The amendment of Section 903.4, entitled **Sprinkler system supervision and alarms,** to read as follows:

903.4 Sprinkler system supervision and alarms. All valves controlling the water supply for automatic sprinkler systems and water-flow switches on all sprinkler systems shall be electrically supervised and monitored by a UL listed Central Station. The fire-pump system shall also be supervised and monitored for "power available," "phase reversal" and "pump running" conditions on distinct circuits.

Exceptions:

1. Automatic sprinkler systems protecting one-and two-family dwellings.
2. Limited area systems serving fewer than 20 sprinklers.
3. Jockey pump control valves that are sealed or locked in the open position.

Sprinkler and standpipe system water-flow detectors shall be provided for each floor tap to the sprinkler system and shall cause an alarm upon detection of water flow for more than 45 seconds. All control valves in the sprinkler and standpipe systems except for fire department hose connection valves shall be electrically supervised to initiate a supervisory signal at the central station upon tempering.

48. The amendment of Section 903.4.2, entitled **Alarms**, to add a second paragraph to read as follows:

The alarm device required on the exterior of the building shall be a weatherproof horn/strobe notification appliance with a minimum 75 candela strobe rating, installed as close as practicable to the fire department connection.

49. The amendment of Section 903.4.3, entitled **Floor control valves**, to read as follows:

903.4.3 Floor control valves. Sprinkler and standpipe system water-flow detectors shall be provided for each floor tap to the sprinkler system and shall cause an alarm upon detection of water flow.

50. The addition of Section 903.6., entitled **Spray booths and rooms**, to read as follows:

903.6. Spray booths and rooms. New and existing spray booths and spray rooms shall be protected by an approved automatic fire extinguishing system in accordance with Section 1504.4 of the International Fire Code.

51. The addition of Section 905.2, entitled **Installation standards**, to read as follows:

905.2 Installation standards. Standpipe systems shall be installed in accordance with this section and NFPA 14. Manual dry standpipe systems shall be supervised with a minimum of 10-psig and a maximum of 40-psig air pressure with a high/low alarm.

52. The amendment of Section 905.3.2, entitled **Group A**, to delete Exceptions 1 and 2.

53. The amendment of Section 905.3, entitled **Required installations**, by adding Section 9.05.3.9 and related Exceptions to read as follows:

905.3.9 Buildings exceeding 10,000 sq. ft. In buildings exceeding 10,000 square feet in area per story and where any portion of the building's interior area is more than 200 feet (60960 mm) of travel, vertically and horizontally, from the nearest point of fire department vehicle access, Class I automatic wet or manual wet standpipes shall be provided.

Exceptions:

1. Automatic dry and semi-automatic dry standpipes are allowed as provided for in NFPA 14.
2. R-2 occupancies of four stories or less in height having no interior corridors.

54. The amendment of Section 905.4, entitled **Location of Class I standpipe hose connections**, by amending Items 1, 3 and 5, and adding Item 7 to read as follows:

1. In every required exit stairway, a hose connection shall be provided for each story above and below grade plane. Hose connections shall be

located at an intermediate landing between stories, unless otherwise approved by the fire code official.

2. {No change}
3. In every exit passageway, at the entrance from the exit passageway to other areas of a building.

   Exception: Where floor areas adjacent to an exit passageway are reachable from an exit stairway hose connection by a 30-foot (9144 mm) hose stream from a nozzle attached to 100 feet (30 480 mm) of hose, a hose connection shall not be required at the entrance from the exit passageway to other areas of the building.
4. {No change}
5. Where the roof has a slope of less than four units vertical in 12 units horizontal (33.3-percent slope), each standpipe shall be provided with a two-way a hose connection shall be located to serve the roof or at the highest landing of an exit stairway with stair access to the roof provided in accordance with Section 1011.12.
6. {No change}
7. When required by this Chapter, standpipe connections shall be placed adjacent to all required exits to the structure and at two hundred feet (200') intervals along major corridors thereafter, or as otherwise approved by the fire code official.

55. The amendment of Section 905.9, entitled **Valve supervision**, to add a second paragraph after the Exceptions to read as follows:

    Sprinkler and standpipe system water-flow detectors shall be provided for each floor tap to the sprinkler system and shall cause an alarm upon detection of water flow for more than 45 seconds. All control valves in the sprinkler and standpipe systems except for fire department hose connection valves shall be electrically supervised to initiate a supervisory signal at the central station upon tampering.

56. The amendment of Section 906.1, entitled **Where Required**, by the deletion of the Exception under Paragraph 1.

57. The amendment of Section 907.1.2, entitled **Fire alarm shop drawings**, by adding Sections 907.1.2.1, 907.1.2.2 and 907.1.2.3 to read as follows:

    907.1.2.1 Fire alarm control panel. The fire alarm control panel shall be installed in an approved location adjacent to the main entrance to the building unless otherwise approved by the Fire Code Official.

    907.1.2.2 Key/Codes. Fire alarm control panel functions such as silence and reset shall be operable without the use of a key or code. The panel cover may be locked, but the function keys cannot require a key or code.

907.1.2.3 Alarm verification. Alarm verification shall be provided for smoke detectors. Alarm verification shall be provided at the fire alarm control panel when more than thirty (30) detectors are installed.

Exception: Alarm verification is not required for single station type smoke detectors.

58. The amendment of Section 907.1, entitled **General**, by adding Section 907.1.4 to read as follows:

907.1.4 Design Standards. Fire alarm systems, automatic fire detectors, emergency voice alarm communication systems and notification devices shall be designed, installed and maintained in accordance with NFPA 72 and local amendments.

All alarm systems new or replacement serving 50 or more alarm initiating devices shall be addressable fire detection systems. Alarm systems serving more than 75 smoke detectors or more than 200 total fire alarm devices shall be analog intelligent addressable fire detection systems.

Exception: Existing systems need not comply unless the total system remodel or expansion initiated after October 1998 exceeds 30% of the building. When cumulative building remodel or expansion exceeds 50%, the building must comply within 18 months of permit application.

59. The amendment of Section 907.2.3, entitled **Group E**, to read as follows:

907.2.3 Group E. A manual fire alarm system shall be installed in Group E educational occupancies. When automatic sprinkler systems or smoke detectors are installed, such systems or detectors shall be connected to the building fire alarm system.

An approved smoke detection system shall be installed in Group E day care occupancies.

Unless separated by a minimum of 100′ open space, all buildings, whether portable buildings or the main building, will be considered one building for alarm occupant load consideration and interconnection of alarm systems.

60. The amendment of Section 907.2.3, entitled **Group E**, by the amendment of Exception 1 and the addition of Exceptions 1.1 and 1.2, to read as follows:

Exceptions:

1. Group E educational and day care occupancies with an occupant load of less than 50 when provided with an approved automatic sprinkler system.

1.1 Portable/Temporary buildings in Group E Educational occupancies with manual fire alarm systems are not required to be connected to the alarm system in the main building.

1.2 Residential in-home day care with not more than 12 children may use interconnected single station detectors in all habitable rooms. (For care of more than five children 2½ or less years of age, see Section 907.2.6.)

61. The amendment of Section 907.2.8, entitled **Group R-1**, by adding Section 907.2.8.4, entitled **Carbon Monoxide Detectors**, to read as follows:

907.2.8.4 Carbon Monoxide Detectors. In new and existing hotels and motels, carbon monoxide detectors shall be provided in all locations where there is gas-fired equipment, such as, but not limited to, dryers, HVAC, or hot water heaters. When the building is equipped with a fire alarm system, the carbon monoxide detectors shall be connected in such a manner as to cause the Fire Alarm system to sound an alarm when the carbon monoxide goes into alarm.

62. The amendment of Section 907.2.13, entitled **High-rise buildings**, to change Exception 3 to read as follows:

3. Open air portions of buildings with an occupancy in Group A-5 in accordance with Section 303.1 of the *International Building Code,* however, this exception does not apply to accessory uses including, but not limited to, sky boxes, restaurants and similarly enclosed areas.

63. The amendment of Section 907.4.2, entitled **Manual fire alarm boxes**, by adding Section 907.4.2.7, entitled **Type**, to read as follows:

907.4.2.7 Type. Manual alarm initiating devices shall be an approved double action type.

64. The amendment of Section 907.6.1, entitled **Wiring**, by adding Section 907.6.1.1, entitled **Wiring Installation**, to read as follows:

907.6.1.1 Wiring Installation. All fire alarm systems shall be installed in such a manner that the failure of any single alarm-actuating or alarm-indicating device will not interfere with the normal operation of any other such devices. All systems shall be Class "A" wired with a minimum of six feet separation between supply and return loops. IDC – Class "A" style – D – SLC Class "A" style 6 – notification Class "B" Style Y.

65. The amendment of Section 907.6.3, entitled **Initiating device identification**, by deleting all four Exceptions.

66. The amendment of 907.6.4, entitled **Zones**, to read as follows:

907.6.4 Zones. Each floor shall be zoned separately and a zone shall not exceed 22,500 square feet (1860 m^2). The length of any zone shall not exceed 300 feet (91 440 mm) in any direction. A maximum of one (1) water flow switch or three (3) tamper switches, five (5) pull stations or ten (10) smoke or heat detectors may be interconnected to be upon a single zone of a fire alarm control panel.

Exceptions:
1. Automatic sprinkler system zones shall not exceed the area permitted by NFPA 13
2. Addressable systems.

67. The amendment of 907.6.4.2, entitled **High-rise buildings**, to read as follows:

907.6.4.2 High-rise buildings. In buildings that have floors located more than 75 feet (16 764 mm) above the lowest level of fire department vehicle access, a separate zone by floor shall be provided for all of the following types of alarm-initiating devices where provided:
1. Smoke detectors.
2. Sprinkler water-flow.
3. Manual fire alarm boxes.
4. Other approved types of automatic fire detection devices or suppression systems.

Exception: Addressable systems.

68. The amendment of Section 907.6.6, entitled **Monitoring**, to read as follows:

907.6.6 Monitoring. Where required by this chapter, an approved UL listed central station, with a dual path communicator, in accordance with NFPA 72 shall monitor fire alarm systems.

Exception: Supervisory service is not required for automatic sprinkler systems in one- and two-family dwellings.

69. The amendment of Section 907.6.6, entitled **Monitoring**, by adding Section 907.6.6.3 to read as follows:

907.6.6.3 Local alarm system. When an automatic fire alarm system is not monitored by an approved central station alarm company, an external weatherproof, audible/visual alarm sounding device shall be provided in an approved location with an approved sign, with a minimum of four-inch (4") letters, reading "WHEN ALARM SOUNDS, CALL FIRE DEPARTMENT" adjacent to the alarm-sounding device.

An approved permanent sign reading "LOCAL ALARM ONLY – CALL FIRE DEPARTMENT" shall be provided on or adjacent to the fire alarm control panel and all manual fire alarm pull stations.

70. The amendment of Section 909, entitled **SMOKE CONTROL SYSTEMS**, by adding a new Section 909.22, entitled **Stairway or ramp pressurization alternative**, and subsections, to read as follows:

909.22 Stairway or ramp pressurization alternative. Where the building is equipped throughout with an automatic sprinkler system in accordance with Section 903.3.1.1 and the stair pressurization alternative is chosen for compliance with Building Code requirements for a smokeproof enclosure, interior exit stairways or ramps shall be pressurized to a minimum of 0.10 inches of water (25 Pa) and a maximum of 0.35 inches of water (87 Pa) in the shaft relative to the building measured with all interior exit stairway and ramp doors closed under maximum anticipated conditions of stack effect and wind effect. Such systems shall comply with Section 909, including the installation of a separate fire-fighter's smoke control panel as per Section 909.16, and a Smoke Control Permit shall be required from the Fire Department as per Section 105.7.

909.22.1 Ventilating equipment. The activation of ventilating equipment for the stair or ramp pressurization system shall be by smoke detectors installed at each floor level at an approved location at the entrance to the smokeproof enclosure. When the closing device for the stairway or ramp shaft and vestibule doors is activated by smoke detection or power failure, mechanical equipment shall activate and operate at the required performance levels. Smoke detectors shall be installed in accordance with Section 907.3.

909.22.1.1 Ventilation systems. Smokeproof enclosure ventilation systems shall be independent of other building ventilation systems. The equipment,

control wiring, power wiring and ductwork shall comply with one of the following:

1. Equipment, control wiring, power wiring and ductwork shall be located exterior to the building and directly connected to the smokeproof enclosure or connected to the smokeproof enclosure by ductwork enclosed by not less than 2-hour fire barriers constructed in accordance with Section 707 of the Building Code or horizontal assemblies constructed in accordance with Section 711 of the Building Code, or both.
2. Equipment, control wiring, power wiring and ductwork shall be located within the smokeproof enclosure with intake or exhaust directly from and to the outside or through ductwork enclosed by not less than 2-hour barriers constructed in accordance with Section 707 of the Building Code or horizontal assemblies constructed in accordance with Section 711 of the Building Code, or both.
3. Equipment, control wiring, power wiring and ductwork shall be located within the building if separated from the remainder of the building, including other mechanical equipment, by not less than 2-hour fire barriers constructed in accordance with Section 707 of the Building Code or horizontal assemblies constructed in accordance with Section 711 of the Building Code, or both.

   Exceptions:
   1. Control wiring and power wiring utilizing a 2-hour rated cable or cable system.
   2. Where encased with not less than 2 inches (51 mm) of concrete.
   3. Control wiring and power wiring protected by a listed electrical circuit protective system with a fire-resistance rating of not less than 2 hours.

909.22.1.2 Standby power. Mechanical vestibule and stairway and ramp shaft ventilation systems and automatic fire detection systems shall be provided with standby power in accordance with Section 2702 of the Building Code.

909.22.1.3 Acceptance and testing. Before the mechanical equipment is approved, the system shall be tested in the presence of the fire code official to confirm that the system is operating in compliance with these requirements.

71. The amendment of Section 910.2, entitled **Where required**, by changing Exceptions 2 and 3 to read as follows:

2. Only manual smoke and heat removal shall be required in areas of buildings equipped with early suppression fast-response (ESFR) sprinklers. Automatic smoke and heat removal is prohibited.
3. Only manual smoke and heat removal shall not be required in areas of buildings equipped with control mode special application sprinklers with a response time index of $50(m*S)^{1/2}$ or less that are listed to control a fire in stored commodities with 12 or fewer sprinklers. Automatic smoke and heat removal is prohibited.

72. The amendment of Section 910.2, entitled **Where required**, by adding Section 910.2.3, entitled **Group H**, with exceptions to read as follows:

910.2.3 Group H. Buildings and portions thereof used as a Group H occupancy as follows:

1. In occupancies classified as Group H-2 or H-3, any of which are more than 15,000 square feet (1394 m^2) in single floor area.

   Exception: Buildings of noncombustible construction containing only noncombustible materials.

2. In areas of buildings in Group H used for storing Class 2, 3, and 4 liquid and solid oxidizers, Class 1 and unclassified detonable organic peroxides, Class 3 and 4 unstable (reactive) materials, or Class 2 or 3 water-reactive materials as required for a high-hazard commodity classification.

   Exception: Buildings of noncombustible construction containing only noncombustible materials.

73. The amendment of Section 910.3, entitled **Smoke and heat vent locations**, by adding section 910.3.4, entitled **Vent operation**, to read as follows:

910.3.4 Vent operation. Smoke and heat vents shall be capable of being operated by approved automatic and manual means. Automatic operation of smoke and heat vents shall conform to the provisions of Sections 910.3.2.1 through 910.3.2.3.

910.3.4.1 Sprinklered buildings. Where installed in buildings equipped with an approved automatic sprinkler system, smoke and heat vents shall be designed to operate automatically.

The automatic operating mechanism of the smoke and heat vents shall operate at a temperature rating at least 100 degrees F (approximately 38 degrees Celsius) greater than the temperature rating of the sprinklers installed.

Exception: Manual only system per Section 910.2.

910.3.4.2 Nonsprinklered buildings. Where installed in buildings not equipped with an approved automatic sprinkler system, smoke and heat vents shall operate automatically by actuation of a heat-responsive device rated at between 100°F (56°C) and 220°F (122°C) above ambient.

Exception: Listed gravity-operated drop out vents.

74. The amendment of Section 910.4.3.1, entitled **Makeup air**, to read as follows:

910.4.3.1 Makeup air. Makeup air openings shall be provided within 6 feet (1829 mm) of the floor level. Operation of makeup air openings shall be automatic. The minimum gross area of makeup air inlets shall be 8 square feet per 1,000 cubic feet per minute (0.74 m2 per 0.4719 m3/s) of smoke exhaust.

75. The amendment of Section 910.4.4, entitled **Activation**, to read as follows:

910.4.4 Activation. The mechanical smoke removal system shall be activated automatically by the automatic sprinkler system or by an approved fire detection system. Individual manual controls shall also be provided.

Exception: Manual only systems per Section 910.2.

76. The amendment of Section 912.2, entitled **Location**, by adding Section 912.2.3, entitled **Hydrant distance**, to read as follows:

912.2.3 Hydrant distance. An approved fire hydrant shall be located within 100 feet of the fire department connection as the fire hose lays along an unobstructed path.

77. The amendment of Section 913.2.1, **Protection of fire pump rooms**, by adding a second paragraph and exception to read as follows:

When located on the ground level at an exterior wall, the fire pump room shall be provided with an exterior fire department access door that is not less than 3 ft. in width and 6 ft. – 8 in. in height, regardless of any interior doors that are provided. A key box shall be provided at this door, as required by Section 506.1.

Exception: When it is necessary to locate the fire pump room on other levels or not at an exterior wall, the corridor leading to the fire pump room access from the exterior of the building shall be provided with equivalent fire resistance as that required for the pump room, or as approved by the fire code official. Access keys shall be provided in the key box as required by Section 506.1.

78. The amendment of Section 1006.2.2, entitled **Egress based on use**, by adding a new Section 1006.2.2.6, entitled **Electrical Rooms**, to read as follows:

1006.2.2.6 Electrical Rooms. For electrical rooms, special exiting requirements may apply. Reference the electrical code as adopted.

79. The amendment of Section 1009.1, entitled **Accessible means of egress required**, by adding Exception 4:

4. Buildings regulated under State Law and built in accordance with State registered plans, including any variances or waivers granted by the State, shall be deemed to be in compliance with the requirements of Section 1009.

80. The amendment of Section 1010.1.9.4, entitled **Bolt Locks**, by changing Exceptions 3 and 4 to read as follows:

3. Where a pair of doors serves an occupant load of less than 50 persons in a Group B, F, M or S occupancy, manually operated edge- or surface- mounted bolts are permitted on the inactive leaf. The inactive leaf shall not contain doorknobs, panic bars or similar operating hardware.
4. Where a pair of doors serves a Group A, B, F, M or S occupancy, manually operated edge- or surface- mounted bolts are permitted on the inactive leaf provided such inactive leaf is not needed to meet egress capacity requirements and the building is equipped throughout with an automatic sprinkler system in accordance with Section 903.3.1.1. The inactive leaf shall not contain doorknobs, panic bars or similar operating hardware.

81. The amendment of Section 1010.1.9.7, entitled **Delayed egress locks**, by amending the first paragraph to read as follows:

1010.1.9.7 Delayed egress locks. A permit from the Fire Department is required prior to the installation of any delayed egress locks or other special locking systems. Approved, listed, delayed egress locks shall be permitted

to be installed on doors serving any occupancy except Group A, E and H occupancies in buildings which are equipped throughout with an automatic sprinkler system in accordance with Section 903.3.1.1 and an approved automatic smoke or heat detection system installed in accordance with Section 907, provided that the doors unlock in accordance with Items 1 through 8 below. A building occupant shall not be required to pass through more than one door equipped with a delayed egress lock before entering an exit.

{Items 1-8 remain unchanged}

82. The amendment of Section 1010.1.9.9., entitled **Electromagnetically locked egress doors**, by amending the first paragraph to read as follows:

1010.1.9.9 Electromagnetically locked egress doors. Doors in the *means of egress* that are not otherwise required to have panic hardware in buildings with an occupancy in Group A, B, E, I-1, I-2, M, R-1 or R-2 and doors to tenant spaces in Group A, B, E, I-1, I-2, M, R-1 or R-2 shall be permitted to be electromagnetically locked if equipped with *listed* hardware that incorporates a built-in switch and meet the requirements below:

{Items 1-6 remain unchanged}

83. The amendment of Section 1010.1.9.11, entitled **Stairway Doors**, by adding Exception 6 to read as follows:

    6. In stairways serving more than four stories, doors can be locked from stairway side, if lock is connected to fire alarm system and key to the door is provided in a Knox Box. Activation of fire alarm system must release locks on all stairway doors.

84. The amendment of Section 1013.5, entitled **Internally illuminated exit signs**, to read as follows:

1013.5 Internally illuminated exit signs. Electrically powered and self-luminous exit signs shall be listed and labeled in accordance with UL 294 and shall be installed in accordance with the manufacturer's instructions and Chapter 27. Exit signs shall be illuminated at all times. Photoluminescent exit signs are prohibited.

85. The addition of Section 1016.3, entitled **Electrical room means of egress**, to read as follows:

1016.3 Electrical room means of egress. For electrical rooms containing equipment over 600 volts, see electrical code, NFPA 70, Article 110, generally.

86. The addition of Section 1017.4, entitled **Roof vent increase**, to read as follows:

1017.4. Roof vent increase. In buildings that are one story in height, equipped with automatic heat and smoke roof vents complying with Section 910 and equipped throughout with an automatic sprinkler system in accordance with Section 903.3.1.1, the maximum exit access travel distance shall be 400 feet for occupancies in Group F-1 or S-1.

87. The amendment of Section 1020.1, entitled **Construction**, to add an Exception 6 to read as follows:

6. In group B occupancies, corridor walls and ceilings need not be of fire-resistive construction within a single tenant space when the space is equipped with approved automatic smoke-detection within the corridor. The actuation of any detector shall activate self-annunciating alarms audible in all areas within the corridor. Smoke detectors shall be connected to an approved automatic fire alarm system where such system is provided.

88. The amendment of Section 1029.1.1.1, entitled **Spaces under grandstands and bleachers**, by deleting it in its entirety.

89. The amendment of Section 1101.1, entitled **Scope**, by adding an Exception to read as follows:

Exception: Components of projects regulated by and registered with Architectural Barriers Division of Texas Department of Licensing and Regulation shall be deemed to be incompliance with the requirements of this chapter.

90. The amendment of Section 1203.1, entitled **General**, to read as follows:

1203.1 General. Buildings shall be provided with natural ventilation in accordance with Section 1203.4, or mechanical ventilation in accordance with the *International Mechanical Code*.

Where air infiltration rate in a *dwelling unit* is 5 air changes or less per hour when tested with a blower door at a pressure 0.2-inch w.c. (50 Pa) in accordance with Section 402.4.1.2 of the *International Energy Conservation Code*, the dwelling unit shall be ventilated by mechanical

means in accordance with Section 403 of the *International Mechanical Code*.

91. The amendment of Table 1505.1, entitled **MINIMUM ROOF COVERING CLASSIFICATION FOR TYPES OF CONSTRUCTION**, by deleting footnote c and replacing footnote b with the following:

    b. Non-classified roof coverings shall be permitted on buildings of U occupancies having not more than 120 sq. ft. of protected roof area. When exceeding 120 sq. ft. of protected roof area, buildings of U occupancies may use non-rated non-combustible roof coverings.

92. The amendment of Section 1505.7, entitled **Special purpose roofs**, by deleting it in its entirety.

93. The amendment of Section 1511.1, entitled **General**, by amending the first paragraph to read as follows:

    1511.1 General. Materials and methods of applications used for recovering or replacing an existing roof covering shall comply with the requirements of Chapter 15. All individual replacement shingles or shakes shall be in compliance with the rating required by Table 1505.1.

94. The amendment of Section 1612.3, entitled **Establishment of flood hazard areas**, to read as follows:

    1612.3 Establishment of flood hazard areas. To establish flood hazard areas, the applicable governing authority shall adopt a flood hazard map and supporting data. The flood hazard map shall include, at a minimum, areas of special flood hazard as identified by the Federal Emergency Management Agency in an engineering report entitled "The Flood Insurance Study for Tarrant County, Texas, dated September 25, 2009, as amended or revised with the accompanying Flood Insurance Rate Map (FIRM) and Flood Boundary and Floodway Map (FBFM) and related supporting data along with any revisions thereto. The adopted flood hazard map and supporting data are hereby adopted by reference and declared to be part of this section.

95. The amendment of Section 1612.3.2, entitled **Determination of impacts**, to read as follows:

    1612.3.2 Determination of impacts. In flood hazard areas where design flood elevations are specified, the applicant shall provide an engineering analysis developed by a licensed professional engineer that demonstrates that the proposed work will not increase the design flood elevation or reduce conveyance at any point within the jurisdiction in accordance with the

provisions of the Design Criteria Manual and the Flood Damage Prevention Chapter of the Arlington City Code.

96. The amendment of Section 1612.4, entitled **Design and construction**, to read as follows:

1612.4 Design and construction. The design and construction of buildings and structures located in flood hazard areas, including flood hazard areas subject to high-velocity wave action, shall be in accordance with Chapter 5 of ASCE 7 and with ASCE 24 and provisions of the City of Arlington's Flood Damage Chapter.

97. The amendment of Section 1612.5, entitled **Flood hazard documentation**, to read as follows:

1612.5 Flood hazard documentation. The flood hazard documentation as identified in the City of Arlington's Flood Damage Chapter shall be prepared and sealed by a professional engineer and submitted to the building official.

98. The amendment of Section 1704.2, entitled **Special inspections and tests**, is amended to read as follows:

1704.2 Special inspections and tests. Where application is made to the Building Official for construction as specified in Section 105, the owner or the owner's authorized agent, or the registered design professional in responsible charge, other than the contractor, shall employ one or more approved agencies to provide special inspections and tests during construction on the types of work listed under Section 1705 and identify the approved agencies to the Building Official. The special inspector shall not be employed by the contractor. These special inspections and tests are in addition to the inspections identified by the Building Official that are identified in Section 110.

99. The amendment of Section 1704.2.1, entitled **Special inspector qualifications**, is amended to read as follows:

1704.2.1 Special inspector qualifications. Prior to the start of construction and or upon request, the approved agencies shall provide written documentation to the registered design professional in responsible charge and the building official demonstrating the competence and relevant experience or training of the special inspectors who will perform the special inspections and tests during construction. Experience or training shall be considered relevant where the documented experience or training is related to the same type of special inspection or testing activities for projects of

similar complexity and material qualities. These qualifications are in addition to qualifications specified in other sections of this code.

The registered design professional in responsible charge and engineers of record involved in the design of the project are permitted to act as the approved agency and their personnel are permitted to act as special inspectors for the work designed by them, provided they qualify as special inspectors.

100. The amendment of Section 1704.2.4, entitled **Report requirement**, is amended to read as follows:

1704.2.4 Report requirement. Approved agencies shall keep records of special inspections and tests. The approved agency shall submit reports of special inspections and tests to the Building Official upon request, and to the registered design professional in responsible charge. Individual inspection reports [Reports] shall indicate that work inspected or tested was or was not completed in conformance to approved construction documents. Discrepancies shall be brought to the immediate attention of the contractor for correction. If they are not corrected, the discrepancies shall be brought to the attention of the building official and the registered design professional in responsible charge prior to the completion of that phase of the work. A final report documenting required special inspections and tests, and the correction of any discrepancies noted in the inspections or tests, shall be submitted at a point in time agreed upon prior to the start of work by the owner or the owner's authorized agent to the building official.

101. The amendment of Section 1704.2.5.2, entitled **Fabricator approval**, to read as follows:

1704.2.5.1 Fabricator approval. Special inspections during fabrications required by Section 1704 are not required where the work is done on the premises of a fabricator registered and approved to perform such work without special inspection. Approval shall be based upon review of the fabricator's written procedural and quality control manuals and periodic auditing of fabrication practices by an approved agency, or a fabricator that is enrolled in a nationally accepted inspections program. At completion of fabrication, the acceptable or approved fabricator shall submit a certificate of compliance to the owner or the owner's authorized agent or the registered design professional in responsible charge, stating that the work was performed in accordance with the approved construction documents. The certificate of compliance shall also be made available to the Building Official upon request.

102. The amendment of Section 1807.2, entitled **Retaining walls**, to read as follows:

1807.2 Retaining walls. Retaining walls exceeding four feet (4′) in developed height (the height from the base of the foundation to the top of the wall) at any point shall be designed by a professional engineer. A wall built in tiers shall be considered a single wall in developed height when the base of the upper tier is set back from the base of the lower tier less than one and one-half (1½) times the developed height of the wall section below. Walls supporting an imposed load such as a building, driveway or other permanent construction closer to the wall than one and one-half (1½) times the developed height of the wall shall be designed by a professional engineer.

When required to be designed by an engineer the design shall be in accordance with Sections 1807.2.1 through 1807.2.3.

103. The amendment of Section 2503.1, entitled **Inspection**, to read as follows:

2503.1 Inspection. Gypsum in fire-resistive construction and lath shall be inspected.

104. The amendment of Section 2901.1, entitled **Scope**, to add a paragraph to read as follows:

The provisions of this Chapter are meant to work in coordination with the provisions of Chapter 4 of the International Plumbing Code. Should any conflicts arise between the two chapters, the Building Official shall determine which provision applies.

105. The amendment of Section 2902.1, entitled **Minimum number of fixtures**, to read as follows:

2902.1 Minimum number of fixtures. Plumbing fixtures shall be provided for the type of occupancy and in the minimum number shown in Table 2902.1. Types of occupancies not shown in Table 2902.1 shall be considered individually by the building official. The number of occupants shall be determined by this code unless sufficient data is approved by the building official for a different number of occupants. Occupancy classification shall be determined in accordance with Chapter 3.

106. The addition of Section 2902.1.3, entitled **Additional fixtures for food preparation facilities**, to read as follows:

2902.1.3 Additional fixtures for food preparation facilities. In addition to the fixtures required in this Chapter, all food service facilities shall be provided with additional fixtures set out in this section.

2902.1.3.1 Hand washing lavatory. At least one hand washing lavatory shall be provided for use by employees that is accessible from food preparation, food dispensing and ware washing areas. Additional hand washing lavatories may be required based on convenience of use by employees.

2902.1.3.2 Service sink. In new or remodeled food service establishments, at least one service sink or one floor sink shall be provided so that it is conveniently located for the cleaning of mops or similar wet floor cleaning tools and for the disposal of mop water and similar liquid waste. The location of the service sink(s) and/or mop sink(s) shall be approved by the City of Arlington health department.

107. The amendment of Table 2902.1, entitled **MINIMUM NUMBER OF REQUIRED PLUMBING FIXTURES**, to add footnote "f", "g", and "h" to read as follows:

f. The minimum number of drinking fountains shall comply with Table 2902.1 and Chapter 11. Drinking fountains shall not be installed in toilet rooms.

g. Drinking fountains are not required for an occupant load 30 or less and for dining and/or drinking establishments.

h. Where urinals are provided, urinals shall not be substituted for more than 67% of the required water closets in assembly and educational *occupancies*. Urinals shall not be substituted for more than 50% of the required water closets in all other *occupancies*.

108. The amendment of Section 2902.2, entitled **Separate facilities**, to add Exceptions 4 and 5 to read as follows:

4. Separate facilities shall not be required in business occupancies in which the maximum occupant load is 50 or less.
5. Separate facilities shall not be required in medical offices classified as business occupancies.

109. The amendment of Section 3002.1, entitled **Hoistway enclosure protection**, to add Exceptions to read as follows:

Exceptions:
1. Elevators wholly located within atriums complying with Section 404 shall not require hoistway enclosure protection.
2. Elevators in open or enclosed parking garages that serve only the parking garage, and complying with Sections 406.5

and 406.6, respectively, shall not require hoistway enclosure protection.

110. The amendment of Section 3005.4, entitled **Machine rooms, control rooms, machinery spaces and control spaces**, to read as follows:

Section 3005.4 Machine rooms, control rooms, machinery spaces and control spaces. Elevator machine rooms, control rooms, control spaces and machinery spaces shall be enclosed with fire barriers constructed in accordance with Section 707 or horizontal assemblies constructed in accordance with Section 711, or both.

111. The amendment of Section 3005, entitled **MACHINE ROOMS**, to add Section 3005.7, et seq., to read as follows:

3005.7 Fire Protection in Machine rooms, control rooms, machinery spaces and control spaces.

3005.7.1 Automatic sprinkler system. The building shall be equipped throughout with an automatic sprinkler system in accordance with Section 903.3.1.1, except as otherwise permitted by Section 903.3.1.1.1 and as prohibited by Section 3005.7.2.1.

3005.7.2.1 Prohibited locations. Automatic sprinklers shall not be installed in machine rooms, elevator machinery spaces, control rooms, control spaces and elevator hoist-ways.

3005.7.2.2 Sprinkler system monitoring. The sprinkler system shall have a sprinkler control valve supervisory switch and water-flow initiating device provided for each floor that is monitored by the building's fire alarm system.

3005.7.3 Water protection. An approved method to prevent water from infiltrating into the hoistway enclosure from the operation of the automatic sprinkler system outside the elevator lobby shall be provided.

3005.7.4 Shunt trip. Means for elevator shutdown in accordance with Section 3005.5 shall not be installed.

112. The amendment of Section 3005, entitled **MACHINE ROOMS**, to add Section 3005.8 to read as follows:

3005.8 Storage. Storage shall not be allowed within the elevator machine room, control room, machinery spaces and or control spaces. Provide approved signage at each entry to the above listed locations stating: "No Storage Allowed."

113. The amendment of Section 3006.2, entitled **Hoistway opening protection required**, to add Item 5 to read as follows:

5. The building is a high rise and the elevator hoistway is more than 75 feet (22 860 mm) in height. The height of the hoistway shall be measured from the lowest floor at or above grade to the highest floors served by the hoistway.

114. The amendment of Section 3109, entitled **SWIMMING POOLS, SPAS AND HOT TUBS**, by replacing said section to read as follows:

SECTION 3109
SWIMMING POOL ENCLOSURES AND SAFETY DEVICES

3109.1 General. Swimming pools shall comply with the requirements of this section and other applicable sections of this code.

3109.2 Definition. The following word and term shall, for the purposes of this section and as used elsewhere in this code, have the meaning shown herein.

SWIMMING POOLS. Any structure intended for swimming, recreational bathing or wading that contains water over 24 inches (610 mm) deep. This includes in-ground, above-ground and on-ground pools; hot tubs; spas and fixed-in-place wading pools.

3109.3 Public Swimming Pools. Public swimming pools (pools not accessory to a 1- or 2-family dwelling) shall be completely enclosed by a fence that complies with the Health and Sanitation Chapter, Article VII, Public Swimming Pool, Section 7.01. Driveway access gates across a paved or improved surface intended for regular vehicle access shall not be located in a swimming pool barrier.

3109.4 Residential Swimming Pools. See Section 1.04(D) of the "Construction" Chapter of the Arlington City Code.

3109.5 Entrapment Avoidance. Suction outlets shall be designed and installed in accordance with ANSI/APSP-7.

D. The amendment of the following I.R.C. provisions:

1. The amendment of Section 101.1, entitled **Title**, to read as follows:

101.1 Title. These provisions shall be known as the Residential Code for One- and Two-family Dwellings of the City of Arlington, Texas, and shall be cited as such and will be referred to herein as "this code."

2. The amendment of Section 102.4, entitled **Referenced codes and standards**, to read as follows:

102.4 Referenced codes and standards. The codes, when specifically adopted, and standards referenced in this code shall be considered part of the requirements of this code to the prescribed extent of each such reference. Whenever amendments have been adopted to the referenced codes and standards, each reference to said code and standards shall be considered to reference the amendments as well. Any reference made to NFPA 70, or ICC Electrical Code shall mean the Electrical Code as adopted.

Where differences occur between provisions of this code and referenced codes and standards, the provisions of this code shall apply.

> Exception: Where enforcement of a code provision would violate the conditions of the listing of the equipment or appliance, the conditions of the listing and manufacturer's instructions shall apply.

3. The amendment of Section 104.10.1, entitled **Flood hazard areas**, by deleting said section in its entirety.

4. The amendment of Section 105.3.1.1, entitled **Determination of substantially improved or substantially damaged existing buildings in flood hazard areas**, by deleting said section in its entirety.

5. The amendment of Section 106.1.4, entitled **Information for construction in flood hazard areas**, by deleting said section in its entirety.

6. The amendment of Section 110, entitled **CERTIFICATE OF OCCUPANCY**, by deleting said section in its entirety.

7. The amendment of Section R114, entitled **STOP WORK ORDER**, to read as follows:

SECTION 114
STOP WORK ORDER

114.1 Stop Work Order. Whenever any work is being done contrary to the provisions of this Code, the Building Official may order the work stopped by notice in writing served on any persons engaged in the doing or

causing such work to be done. Any such person shall forthwith stop such work until:

a. He or she is authorized by the Building Official to proceed with the work; or

b. An appeal perfected pursuant to Section 2.06 of Article II has resulted in a waiver of the condition causing the stop order, or a finding that there is no cause for a stop order.

Failure to stop such work, in addition to penalties and remedies elsewhere set forth, shall void any appeal.

8. The amendment of Section 202, entitled **Definitions**, to revise the definition of **Townhouse** and add the definitions of **Glazing Area**, **Reclaimed Water**, and **Shall** to read as follows:

GLAZING AREA. Total area of the glazed fenestration measured using the rough opening and including sash, curbing or other framing elements that enclose conditioned space. Glazing area includes the area of glazed fenestration assemblies in walls bounding conditioned basements. For doors where the daylight opening area is less that 50 percent of the door area, the glazing area is the daylight opening area. For all other doors, the glazing area is the rough opening area for the door including the door and the frame.

RECLAIMED WATER or "Recycled Water" means domestic or municipal wastewater which has been treated to a quality suitable for beneficial use. Reclaimed or recycled water is non-potable water.

SHALL, as it applies to an act or duty to be performed by the Building Official pursuant to any section of this Building Code, is discretionary. Its use in all other applications in this Code shall be mandatory.

TOWNHOUSE. A single-family dwelling unit constructed in a group of attached units separated by property lines in which each unit extends from foundation to roof and with yard or public way on at least two sides.

9. The amendment of Table 301.2(1), entitled **CLIMATIC AND GEOGRAPHIC DESIGN CRITERIA**, to fill in as follows:

GROUND SNOW LOAD	WIND DESIGN				SEISMIC DESIGN CATEGORY[f]	SUBJECT TO DAMAGE FROM			WINTER DESIGN TEMP[e]	ICE BARRIER UNDER-LAYMENT[h]	FLOOD HAZARDS[g]	AIR FREEZING INDEX[i]	MEAN ANNUAL TEMP[j]
	SPEED[d] (MPH)	Topographic Effects[k]	Special Wind Region[L]	Windborne Debris Zone[m]		Weathering[a]	Frost Line Depth[b]	Termite[c]					
5 lb/ft	115 (3 sec-gust)/ 76 fastest mile	No	No	No	A	Moderate	6"	Very Heavy	22^0 F	No	Local Code	150	64.9^0 F

10. The amendment of Section 301.2.4, **Floodplain construction**, to read as follows:

301.2.4 Construction in flood hazard areas. Permits for the construction, reconstruction, rehabilitation, addition or other improvements shall be performed in accordance with the provisions of SECTION 1612 FLOOD LOADS of the International Building Code, as amended.

11. The amendment of Section 302.1, entitled **Exterior walls**, by adding Exception 6, to read as follows:

6. Open metal carport structures may be constructed within zero (0) feet of the property line without fire-resistive or opening projection when the location of such is approved as required by other City ordinances.

11.5 The amendment of Section R302.2, entitled **Townhouses**, by adding Item 3 to read as follows:

3. The common wall shall be not less than two 1-hour fire-resistance-rated wall assemblies tested in accordance with ASTM E 119 or UL 263. Plumbing and mechanical equipment shall be allowed in such walls adjacent to the dwelling unit being served.

12. The amendment of Section 302.3, entitled **Two-family dwellings**, by adding Exception 3 to read as follows:

    3. Two-family dwelling units that are also divided by a property line through the structure shall be separated as required for townhouses.

13. The amendment of Section 302.5.1, entitled **Opening protection**, to read as follows:

    302.5.1 Opening protection. Openings from a private garage directly into a room used for sleeping purposes shall not be permitted. Other openings between the garage and residence shall be equipped with solid wood doors not less than 13/8 inches (35 mm) in thickness, solid or honeycomb core steel doors not less than 13/8 inches (35 mm) thick, or 20-minute fire-rated doors.

14. The amendment of Section 302.7, entitled **Under stair protection**, to read as follows:

    302.7 Under stair protection. Enclosed accessible space under stairs shall have walls, under stair surface and any soffits protected on the enclosed side with 5/8-inch (15.8 mm) fire-rated gypsum board or one-hour fire-resistive construction.

15. The amendment of Section 303.3, entitled **Bathrooms**, to amend the Exception to add the following sentence:

    Exhaust air from the space shall be exhausted out to the outdoors unless the space contains only a water closet, a lavatory, or water closet and a lavatory may be ventilated with an approved mechanical recirculating fan or similar device designed to remove odors from the air.

16. The amendment of Section 305.1, entitled **Minimum height**, to add Exception 4 to read as follows:

    4. In one- and two-family dwellings, beams or girders spaced not less than 4 feet (1219 mm) on center and projecting not more than 6 inches (152 mm) below the required ceiling height.

17. The amendment of SECTION 313, entitled **AUTOMATIC FIRE SPRINKLER SYSTEMS**, to read as follows:

SECTION 313
AUTOMATIC FIRE SPRINKLER SYSTEMS

313.1 Design and installation. Automatic fire sprinkler systems, when installed and/or repaired, shall comply with Section 903.3 of the 2015 Edition of the International Building Code as adopted.

18. The amendment of Section 315.2.2, entitled **Alterations, repairs and additions**, to amend Exception 2 to read as follows:

> 2. Installation, alteration or repairs of electrical powered plumbing or mechanical systems are exempt from the requirements of this section.

19. The amendment of Section 315.5, entitled **Power source**, to read as follows:

315.5 Power source. Carbon monoxide alarms shall receive their primary power from the building wiring when such wiring is served from a commercial source, and when primary power is interrupted, shall receive power from a battery. Wiring shall be permanent and without a disconnecting switch other than those required for over current protection.

> Exception: Hard-wiring of carbon monoxide alarms in existing areas shall not be required where the addition or alterations do not result in the removal of interior wall or ceiling finishes exposing the structure, unless there is an attic, crawl space or basement available which could provide access for hard wiring and interconnection without the removal of interior finishes.

20. The amendment of SECTION 322, entitled **FLOOD RESISTANT CONSTRUCTION**, to read as follows:

SECTION 322
FLOOD RESISTANT CONSTRUCTION

322.1 General. Construction in flood hazard areas. Permits for the construction, reconstruction, rehabilitation, addition or other improvements shall be performed in accordance with the provisions of SECTION 1612 FLOOD LOADS of the International Building Code, as amended.

{The remainder of this Section is deleted in its entirety}

21. The amendment of Section 401.2, entitled **Requirements**, to amend by adding a new paragraph following the existing paragraph to read as follows.

Section 401.2. Requirements.
Foundation construction shall be capable of accommodating all loads in accordance with Section 301 and of transmitting the resulting loads to the supporting soil. Fill soils that support footings and foundations shall be designed, installed and tested in accordance with accepted engineering practice. Gravel fill used as footings for wood and precast concrete foundations shall comply with Section 403. Every foundation and/or footing, or any size addition to an existing post-tension foundation, regulated by this code shall be designed and sealed by a Texas-registered engineer.

22. The amendment of Section 602.6.1, entitled **Drilling and notching of top plate**, to read as follows:

602.6.1 Drilling and notching of top plate. When piping or ductwork is placed in or partly in an exterior wall or interior load-bearing wall, necessitating cutting, drilling or notching of the top plate by more than 50 percent of its width, a galvanized metal tie not less than 0.054 inch thick (1.37 mm) (16 Ga) and 5 inches (127 mm) wide shall be fastened across and to the plate at each side of the opening with not less than eight 10d (0.148 inch diameter) having a minimum length of 1 ½ inches (38 mm) at each side or equivalent. Fasteners will be offset to prevent splitting of the top plate material. The metal tie must extend a minimum of 6 inches past the opening. See Figure 602.6.1.

Exception: When the entire side of the wall with the notch or cut is covered by wood structural panel sheathing.

23. The amendment of Figure 602.6.1, entitled **TOP PLATE FRAMING TO ACCOMMODATE PIPING**, to appear as follows:

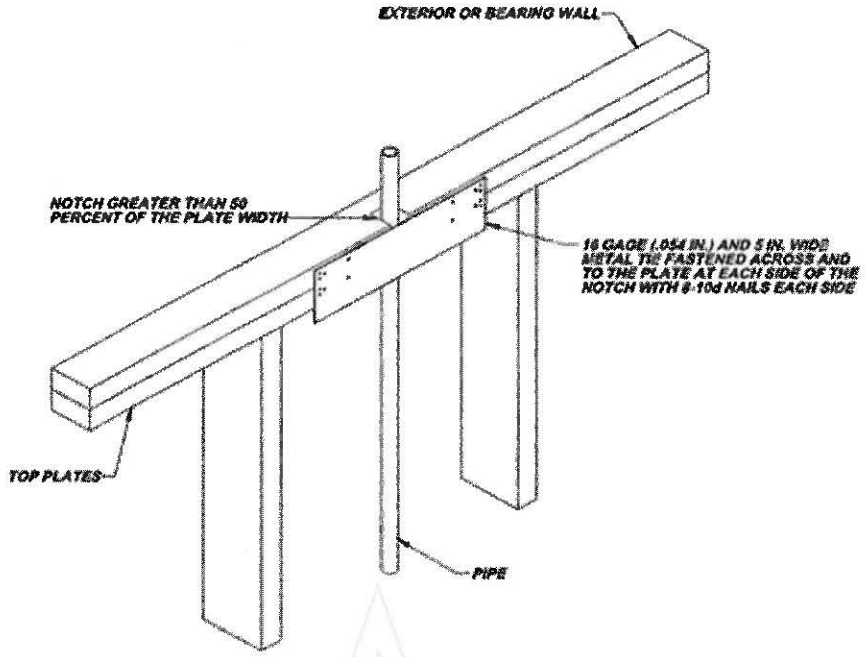

24. The amendment of Section 703.8.4.1, entitled **Size and spacing**, to add a second paragraph to read as follows:

In stud framed exterior walls, all ties shall be anchored to studs as follows:

1. When studs are 16 in (407 mm) o.c., stud ties shall be spaced no further apart than 24 in (737 mm) vertically starting approximately 12 in (381 mm) from the foundation; or
2. When studs are 24 in (610 mm) o.c., stud ties shall be spaced no further apart than 16 in (483 mm) vertically starting approximately 8 in (254 mm) from the foundation.

25. The amendment of Section 902.1, entitled **Roofing covering materials**, to read as follows:

902.1 Roofing covering materials. Roofs shall be covered with materials as set forth in Sections 904 and 905. Class A, B, or C roofing shall be installed. Class A, B, and C roofing required by this section to be listed shall be tested in accordance with UL 790 or ASTM E 108.

Exceptions:

1. Class A roof assemblies include those with coverings of brick, masonry and exposed concrete roof deck.
2. Class A roof assemblies include ferrous or copper shingles or sheets, metal sheets and shingles, clay or concrete roof tile, or slate installed on noncombustible decks.
3. Class A roof assemblies include minimum 16 ounces per square foot copper sheets installed over combustible decks.

4. Class A roof assemblies include slate installed over underlayment over combustible decks.
5. Non-classified roof coverings shall be permitted on one-story detached *accessory structures* used as tool and storage sheds, playhouses and similar uses, provided the floor area does not exceed 200 square feet.

26. The amendment of Chapter 11, entitled **Energy Efficiency**, by deleting it in its entirety and replacing with the following:

1101.1 Scope. This chapter regulates the energy efficiency for the design and construction of buildings regulated by this code.

1101.2 Compliance. Compliance shall be demonstrated by meeting the requirements of the residential provisions of 2015 International Energy Conservation Code.

27. The amendment of Section 1305.1.3, entitled **Appliances in attics**, to read as follows:

1305.1.3 Appliances in attics. Attics containing appliances shall be provided with an opening and a clear and unobstructed passageway large enough to allow removal of the largest appliance, but not less than 30 inches (762 mm) high and 22 inches (559 mm) wide and not more than 20 feet (6096 mm) long measured along the centerline of the passageway from the opening to the appliance. The passageway shall have continuous solid flooring in accordance with Chapter 5 not less than 24 inches (610 mm) wide. A level service space not less than 30 inches (762 mm) deep and 30 inches (762 mm) wide shall be present along all sides of the appliance where access is required. The clear access opening dimensions shall be a minimum of 20 inches by 30 inches (508 mm by 762 mm), or larger and large enough to allow removal of the largest appliance. A walkway to an appliance shall be rated as a floor as approved by the building official. As a minimum, for access to the attic space, provide one of the following:

1. A permanent stair.

2. A pull down stair with a minimum 300 lb (136 kg) capacity.

3. An *access* door from an upper floor level.

Exceptions:
1. The passageway and level service space are not required where the appliance can be serviced and removed through the required opening.

2. Where the passageway is unobstructed and not less than 6 feet (1829 mm) high and 22 inches (559 mm) wide for its entire length, the passageway shall be not more than 50 feet (15 250 mm) long.

28. The amendment of Section 1305.1.3.1, entitled **Electrical requirements,** to add a sentence to read as follows:

Low voltage wiring of 50 Volts or less shall be installed in a manner to prevent physical damage.

29. The amendment of Section 1305.1.4.3, entitled **Electrical requirements,** to add a sentence to read as follows:

Low voltage wiring of 50 Volts or less shall be installed in a manner to prevent physical damage.

30. The amendment of Section 1411.3, entitled **Condensate disposal,** to read as follows:

1411.3 Condensate disposal. Condensate from all cooling coils and evaporators shall be conveyed from the drain pan outlet to a sanitary sewer through a trap, by means of a direct or indirect drain. Such piping shall maintain a minimum horizontal slope in the direction of discharge of not less than 1/8 unit vertical in 12 units horizontal (1-percent slope). Condensate shall not discharge in a publicly exposed area such as into a street, alley, sidewalk or other areas so as to cause a nuisance.

Exceptions:

1. Condensate may discharge directly to a roof drain that connects to an underground storm sewer system,

2. Condensate may discharge directly onto roofs covered with membrane type roof coverings where the condensate will drain to a roof drain that connects to an underground storm sewer system,

3. Condensate may discharge to a landscaped area containing flowers and other bedding plants other than turf. There must be five square feet of landscaped area for each ton of refrigeration, or

4. Condensate may discharge to a French drain consisting of a pit excavated below grade that is not less than 24 inches (610 mm) in any dimension. The pit shall be filled with coarse gravel and the drainpipe shall extend into the pit and be securely anchored. A single drain shall not receive the

condensate discharge of more than 10 tons nominal of combined cooling capacity. The pit shall be covered with sod after inspection. The French drain shall not be located so that it will receive direct discharge from a roof or downspout.

31. The amendment of Section 1411.3.1, entitled **Auxiliary and secondary drain systems**, by amending Items 3 and 4 to read as follows:

    3. An auxiliary drain pan without a separate drain line shall be installed under the coils on which condensation will occur. This pan shall be equipped with a water level detection device conforming to UL 508 that will shut off the equipment served prior to overflow of the pan. The pan shall be equipped with a fitting to allow for drainage. The auxiliary drain pan shall be constructed in accordance with Item 1 of this section. A water level detection device may be installed only with prior approval of the building official.

    4. A water level detection device conforming to UL 508 shall be installed in the primary drain line, the overflow drain line or the equipment-supplied drain pan, located at a point higher than the primary drain line connection and below the overflow rim of such pan. A water level detection device may be installed only with prior approval of the building official.

32. The amendment of Section 1411.3.1.1, entitled **Water-level monitoring devices,** to read as follows:

    1411.3.1.1 Water-level monitoring devices. On down-flow units and other coils that do not have secondary drain or provisions to install a secondary or auxiliary drain pan, a water-level monitoring device shall be installed inside the primary drain pan. This device shall shut off the equipment served in the event that the primary drain becomes restricted. Devices shall not be installed in the drain line. A water level detection device may be installed only with prior approval of the building official.

33. The amendment of Section 1502.4.1, entitled **Material and size**, to read as follows:

    1502.4.1 Material and size. Exhaust ducts shall have a smooth interior finish and shall be constructed of metal a minimum 0.016-inch (0.4mm) thick. The exhaust duct size shall be 4 inches (102 mm) nominal in diameter. The size of duct shall not be reduced along its developed length or at the point of termination.

34. The amendment of Section 1502.4.5.1, entitled **Specified length**, to read as follows:

1502.4.5.1 Specified length. The maximum length of the exhaust duct shall be 35 feet (10668 mm) from the connection to the transition duct from the appliance to the outlet terminal. Where fittings are used, the maximum length of the exhaust duct shall be reduced in accordance with Table M1502.4.5.1. The maximum length of the exhaust duct does not include the transition duct.

35. The deletion of Section 1502.4.5.2, **Manufacturer's instructions**, in its entirety.

36. The deletion of Section 1502.4.6, **Length identification,** in its entirety.

37. The amendment to Section 1502.4.7, **Exhaust duct required**, by deleting the Exception.

38. The amendment of Section 1503.4, entitled **Makeup air required**, to read as follows:

1503.4 Makeup air required. Exhaust hood systems capable of exhausting in excess of 400 cubic feet per minute (0.19 m3/s) shall be provided with makeup air at a rate approximately equal to the difference between the exhaust air rate and 400 cubic feet per minute. Such makeup air systems shall be equipped with a means of closure and shall be automatically controlled to start and operate simultaneously with the exhaust system.

Exception: Where all appliances in the house are of sealed combustion, power-vent, unvented, or electric, the exhaust hood system shall be permitted to exhaust up to 600 cubic feet per minute (0.28 m3/s) without providing makeup air. Exhaust hood systems capable of exhausting in excess of 600 cubic feet per minute (0.28 m3/s) shall be provided with a makeup air at a rate approximately equal to the difference between the exhaust air rate and 600 cubic feet per minute.

39. The amendment of Section 2005.2, entitled **Prohibited locations**, to read as follows:

2005.2 Prohibited locations. Fuel-fired water heaters shall not be installed in a room used as a storage closet. Water heaters located in a bedroom or bathroom shall be installed in a sealed enclosure so that combustion air will not be taken from the living space. Access to such enclosure may be from the bedroom or bathroom when through a solid door, weather-stripped in accordance with the exterior door air leakage requirements of the

International Energy Conservation Code and equipped with an approved self-closing device. Installation of direct-vent water heaters within an enclosure is not required

40. The deletion of Section 2408.3 (305.5), **Private garages**, in its entirety.

41. The amendment of Section 2415.2 (404.2), entitled **CSST,** to add a second paragraph to read as follows:

    Both ends of each section of medium pressure gas piping shall identify its operating gas pressure with an *approved* tag. The tags are to be composed of aluminum or stainless steel and the following wording shall be stamped into the tag:

    "WARNING: 1/2 to 5 psi gas pressure - Do Not Remove"

42. The amendment of Section 2415.2 (404.2), entitled **CSST**, to add an Exception to read as follows:

    > Exception: Corrugated stainless steel tubing (CSST) shall be a minimum of 1/2" (18 EDH).

43. The addition of Section 2415.7.4 (404.7.4), entitled **Additional protection of CSST piping,** to read as follows:

    2415.7.4 (404.7.4) Additional protection of CSST piping. Where Corrugated Stainless Steel Tubing (CSST) piping is installed in exterior wall cavities, insulated wall cavities and/or insulated roof/ceiling assemblies, the CSST piping must be protected for its entire length with flexible metal conduit (per the UL-1 Standard or its equivalent), Schedule 40 steel pipe, or approved strike plates. The additional protection must extend a minimum of 18 inches (457.2 mm) beyond where the CSST piping exits the wall cavities and/or the roof/ceiling assemblies.

44. The addition of Section 2415.12 (404.12), entitled **Minimum burial depth**, to read as follows:

    2415.12 (404.12) Minimum burial depth. Underground piping systems shall be installed a minimum depth of 18 inches (457 mm) below grade, except as provided for in Section 2415.12.1.

45. The deletion of Section 2415.12.1 (404.12.1), entitled **Individual outside appliances**, in its entirety.

46. The amendment of Section 2417.1 (406.1), entitled **General**, to read as follows:

2417.1 (406.1) General. Prior to acceptance and initial operation, all piping installations shall be inspected and pressure tested to determine that the materials, design, fabrication, and installation practices comply with the requirements of this code. The permit holder shall make the applicable tests prescribed in Sections 2417.1.1 through 2417.1.6 to determine compliance with the provisions of this code. The permit holder shall give reasonable advance notice to the building official when the piping system is ready for testing. The equipment, material, power and labor necessary for the inspections and test shall be furnished by the permit holder and the permit holder shall be responsible for determining that the work will withstand the test pressure prescribed in the following tests.

47. The amendment of Section 2417.4, entitled **Test pressure measurement**, to read as follows:

2417.4 (406.4) Test pressure measurement. Test pressure shall be measured with a monometer or with a pressure-measuring device designed and calibrated to read, record, or indicate a pressure loss caused by leakage during the pressure test period. The source of pressure shall be isolated before the pressure tests are made.

48. The amendment of Section 2417.4.1, entitled **Test pressure**, to read as follows:

2417.4.1 (406.4.1) Test pressure. The test pressure to be used shall be no less than 3-psig (20 kPa gauge), or at the discretion of the Code Official, the piping and valves may be tested at a pressure of at least six (6) inches (152 mm) of mercury, measured with a manometer or slope gauge. irrespective of design pressure. For tests requiring a pressure of 3-psig, diaphragm gauges shall utilize a dial with a minimum diameter of three and one-half inches (3 ½"), a set hand, 1/10 pound incrementation and pressure range not to exceed 6 psi for tests requiring a pressure of 3-psig. For tests requiring a pressure of 10-psig, diaphragm gauges shall utilize a dial with a minimum diameter of three and one-half inches (3 ½"), a set hand, a minimum of 2/10 pound incrementation and a pressure range not to exceed 20 psi. For welded piping, and for piping carrying gas at pressures in excess of fourteen (14) inches water column pressure (3.48 kPa) (1/2 psi) and less than 200 inches of water column pressure (52.2 kPa) (7.5 psi), the test pressure shall not be less than ten (10) pounds per square inch (69.6 kPa). For piping carrying gas at a pressure that exceeds 200 inches of water column (52.2 kPa) (7.5 psi), the test pressure shall be not less than one and one-half times the proposed maximum working pressure.

Diaphragm gauges used for testing must display a current calibration and be in good working condition. The appropriate test must be applied to the diaphragm gauge used for testing

49. The amendment of Section 2417.4.2, entitled **Test duration**, to read as follows:

2417.4.2 (406.4.2) Test duration. The test duration shall be held for a length of time satisfactory to the Building Official, but in no case for be not less than fifteen (15) minutes. For welded piping, and for piping carrying gas at pressures in excess of fourteen (14) inches water column pressure (3.48 kPa), the test duration shall be held for a length of time satisfactory to the Building Official, but in no case for less than thirty (30) minutes.

50. The amendment of Section 2420.1 (406.1), entitled **General**, by adding a new Section 2420.1.4 to read as follows:

2420.1.4 Valves in CSST installations. Shutoff valves installed with corrugated stainless steel (CSST) piping systems shall be supported with an approved termination fitting, or equivalent support, suitable for the size of the valves, of adequate strength and quality, and located at intervals so as to prevent or damp out excessive vibration but in no case greater than 12-inches from the center of the *valve*. Supports shall be installed so as not to interfere with the free expansion and contraction of the system's piping, fittings, and valves between anchors. All valves and supports shall be designed and installed so they will not be disengaged by movement of the supporting piping.

51. The amendment of Section 2420.5.1 (409.5.1), entitled **Located within the same room,** to read as follows:

2420.5.1 (409.5.1) Located within the same room. The shutoff valve shall be located in the same room as the appliance. The shutoff valve shall be within 6 feet (1829 mm) of the appliance, and shall be installed upstream of the union, connector or quick connect device it serves. Such shutoff valves shall be provided with access. Appliance shutoff valves located in the firebox of a fireplace shall be installed in accordance with the appliance manufacturer's instructions. A secondary shutoff valve must be installed within 3 feet (914 mm) of the firebox if the appliance shutoff is located in the firebox.

52. The amendment of Section 2421.1 (410.1), entitled **Pressure regulators**, to add a second paragraph and an exception to read as follows:

Access to regulators shall comply with the requirements for access to appliances as specified in Section M1305.

Exception: A passageway or level service space is not required when the regulator is capable of being serviced and removed through the required attic opening.

53. The amendment of Section 2422.1.2.3 (411.1.3.3), by deleting Exception 1 and Exception 4.

54. The amendment of Section 2439.7.1 (614.8.1), entitled **Material and Size**, to add a sentence to read as follows:

The size of duct shall not be reduced along its developed length nor at the point of termination.

55. The deletion of Section 2439.7.4.2 (614.8.4.2), entitled **Manufacturer's instructions**, in its entirety.

56. The deletion of Section 2439.7.5 (614.8.5), entitled **Length identification**, in its entirety.

57. The amendment of Section 2439.7.6 (614.8.6), entitled **Exhaust duct required,** by deleting the Exception.

58. The amendment of Section 2445.2 (621.2), entitled **Prohibited use**, to add the following Exception to read as follows:

2445.2 (621.2) Prohibited use. One or more unvented room heaters shall not be used as the sole source of comfort heating in a dwelling unit.

Exception: Existing approved unvented room heaters may continue to be used in dwelling units, in accordance with the code provisions in effect when installed, when approved by the Building Official, unless an unsafe condition is determined to exist as described in Section 108.7 of the *International Fuel Gas Code*.

59. The amendment of Section 2448.1.1 (624.1.1), entitled **Installation requirements,** to read as follows:

2448.1.1 (624.1.1) Installation requirements. The requirements for water heaters relative to access, sizing, relief valves, drain pans and scald protection shall be in accordance with this code.

60. The amendment of Section 2503.8.2, entitled **Testing**, to read as follows:

2503.8.2 Testing. Reduced pressure principle backflow preventers, double check valve assemblies, double-detector check valve assemblies and

pressure vacuum breaker assembles shall be tested at the time of installation, immediately after repairs or relocation at regular intervals as required by applicable state or local provisions.

61. The amendment of Section 2603.5.1, entitled **Sewer depth**, to read as follows:

2603.5.1 Sewer depth. Building sewers that connect to private sewage disposal systems shall be not less than 12 inches below finished grade at the point of septic tank connection. Building sewers shall be not less than 12 inches below grade.

62. The amendment of Section 2801.6.1, entitled **Pan size and drain,** to read as follows:

2801.6.1 Pan size and drain. The pan shall be not less than 11/2 inches (38 mm) in depth and shall be of sufficient size and shape to receive all dripping or condensate from the tank or water heater. The pan shall be drained by an indirect waste pipe having a diameter of not less than 3/4 inch (19 mm). Piping for safety pan drains shall be of those materials listed in Table 605.4. Multiple pan drains may terminate to a single discharge piping system when approved by the administrative authority and permitted by the manufactures installation instructions and installed with those instructions.

63. The amendment of Section 2801.7, entitled **Water heaters installed in garages**, to add Exceptions to read as follows:

Exceptions:

1. Elevation of the ignition source is not required for appliances that are listed as flammable vapor ignition-resistant.

2. Electric water heaters.

64. The amendment of Section 2804.6.1, entitled **Requirements for discharge piping**, to amend the first sentence and items 1 through 5 to read as follows:

2804.6.1 Requirements for discharge piping. The discharge piping serving a pressure relief valve, temperature relief valve or combination thereof shall:

1. Not be directly connected to the drainage system.

2. Discharge through an air gap.

3. Not be smaller than the diameter of the outlet of the valve served and shall discharge full size to the air gap.

4. Serve a single relief device and shall not connect to piping serving any other relief device or equipment.

   Exception: Multiple relief devices may be installed to a single T & P discharge piping system when approved by the administrative authority and permitted by the manufactures installation instructions and installed with those instructions.

5. Discharge to an indirect waste receptor or to the outdoors.

[remainder unchanged]

65. The amendment of Section 2902.5.3, entitled **Lawn irrigation systems**, to read as follows:

    2902.5.3 Lawn irrigation systems. The potable water supply system to lawn irrigation systems shall be protected as provided for in the Irrigation Chapter.

66. The amendment of Section 2906.2, entitled **Lead content**, to read as follows:

    2906.2 Lead content. Pipe and fittings used in the water-supply system shall have a maximum of less than 0.25% lead in accordance with NSF 372.

66.5. The addition of new Section 2906.6.1, entitled **Push type fittings**, to read as follows:

    2906.6.1 Push type fittings. Push type fittings are prohibited for direct burial unless listed for such use.

67. The amendment of Section 3003.9.2, entitled **Solvent cementing**, by deleting the Exception.

68. The deletion of Section 3111, entitled **COMBINATION WASTE AND VENT**, in its entirety.

69. The amendment of Section 3112.2, entitled **Installation**, to read as follows:

    3112.2 Installation. Traps for island sinks and similar equipment shall be roughed in above the floor and may be vented by extending the vent as high as possible, but not less than the drainboard height and then returning it downward and connecting it to the horizontal sink drain immediately downstream from the vertical fixture drain. The return vent shall be connected to the horizontal drain through a wye-branch fitting and shall, in

addition, be provided with a foot vent taken off the vertical fixture vent by means of a wye-branch immediately below the floor and extending to the nearest partition and then through the roof to the open air or may be connected to other vents at a point not less than six (6) inches (152 mm) above the flood level rim of the fixtures served. Drainage fittings shall be used on all parts of the vent below the floor level and a minimum slope of one-quarter (1/4) inch per foot (20.9 mm/m) back to the drain shall be maintained. The return bend used under the drain-board shall be a one (1) piece fitting or an assembly of a forty-five (45) degree (0.79 radius), a ninety (90) degree (1.6 radius) and a forty-five (45) degree (0.79 radius) elbow in the order named. Pipe sizing shall be as elsewhere required in this Code. The island sink drain, upstream of the return vent, shall serve no other fixtures. An accessible cleanout shall be installed in the vertical portion of the foot vent.

70. The deletion of Section 3112.3, entitled **Vent installation below the fixture flood level rim**, in its entirety.

71. The amendment of Appendix Q, entitled **RESERVED**, to read as follows:

APPENDIX Q
SWIMMING POOLS, SPAS AND HOT TUBS

SECTION Q101
GENERAL

Q101.1 General. The provisions of this appendix shall control the design and construction of swimming pools, spas and hot tubs installed in or on the lot of a one- and two-family dwelling.

SECTION Q102
PERMITS AND INSPECTIONS

Q 102.1 Permit Required. A permit shall be required to construct and/or erect a swimming pool. A permit may only be issued to a registrant as set out in Article IV of the Construction Chapter.

Q 102.2 Submittal required. An application for a permit to construct and/or erect a swimming pool shall be accompanied by the following:

1. Two (2) site plans indicating the location of the proposed swimming pool and the associated swimming pool decks on the lot that have been stamped by the electrical service provider,
2. Lot grading plans, including surface drain inlets and discharges, for both before and after construction,
3. The plans for pool barrier compliance, and

4. Any additional information that may be required by the Building Official.

Q 102.3 Inspection required. After an application for a permit to construct and/or erect a swimming pool has been issued in accordance with Article IV of the Construction Chapter, the following inspections are required as a minimum as applicable:

1. Belly steel inspection,
2. Electrical bonding inspection,
2.1. Pool entrapment protection system,
3. Underground electrical inspection,
4. Underground plumbing and gas piping inspection, and
5. Final inspection to include verification of swimming pool barrier compliance (prior to plastering the swimming pool).

Q 102.4 Lot grading and surface drainage. The construction and/or erection of a swimming pool may not alter the lot grading or drainage patterns intended by the lot's approved grading plan and/or the subdivision's approved grading and drainage plans. The point of discharge of collected surface drains and rain gutters may not exit onto adjacent properties as a concentrated point of discharge.

Q 102.5 It shall be unlawful for the registrant to permit or cause the swimming pool to be filled with water before the existence of a lawful swimming pool barrier is inspected and approved.

SECTION Q 103
DEFINITIONS

Q 103.1 General. For the purposes of these requirements, the terms used shall be defined as follows and as set forth in Chapter 2.

ABOVE-GROUND/ON-GROUND POOL. See "Swimming pool."

BARRIER. A fence, wall, building wall or combination thereof which completely surrounds the swimming pool and obstructs access to the swimming pool.

HOT TUB. See "Swimming pool."

IN-GROUND POOL. See "Swimming pool."

POOL DECK. A flat walking surface consisting of wood, stone, brick, concrete or other similar material located within 5 feet (1524 mm) of the water's edge of a swimming pool.

RESIDENTIAL. That which is situated on the premises of a detached one- or two-family dwelling or a one-family townhouse not more than three stories in height.

SELF-CLOSING GATE. A gate which closes or shuts automatically without the aid of human, electrical, solar or battery power after being opened.

SELF-CLOSING AND SELF-LATCHING DEVICE. A device that causes a gate to automatically close and latch without human, electrical, solar or battery power.

SPA, NONPORTABLE. See "Swimming pool."

SPA, PORTABLE. A nonpermanent structure intended for recreational bathing, in which all controls, water-heating and water-circulating equipment are an integral part of the product.

SWIMMING POOL. Any structure intended for swimming or recreational bathing that contains water over 24 inches (610 mm) deep. This includes in-ground, above-ground and on-ground swimming pools, hot tubs and spas.

SWIMMING POOL, INDOOR. A swimming pool which is totally contained within a structure and surrounded on all four sides by walls of said structure.

SWIMMING POOL, OUTDOOR. Any swimming pool which is not an indoor pool.

SECTION Q 104
SWIMMING POOLS

Q 104.1 In-ground pools. In-ground pools shall be designed and constructed in conformance with ANSI/NSPI-5 as listed in Section Q108.

Q 104.2 Above-ground and on-ground pools. Above-ground and on-ground pools shall be designed and constructed in conformance with ANSI/NSPI-4 as listed in Section Q108.

SECTION Q 105
SPAS AND HOT TUBS

Q 105.1 Permanently installed spas and hot tubs. Permanently installed spas and hot tubs shall be designed and constructed in conformance with ANSI/NSPI-3 as listed in Section Q 108.

Q 105.2 Portable spas and hot tubs. Portable spas and hot tubs shall be designed and constructed in conformance with ANSI/NSPI-6 as listed in Section Q108.

SECTION Q 106
BARRIER REQUIREMENTS

Q 106.1 Application. The provisions of this chapter shall control the design of barriers for residential swimming pools, spas and hot tubs. These design controls are intended to provide protection against potential drownings and near-drownings by restricting access to swimming pools, spas and hot tubs.

Q 106.2 Outdoor swimming pool. An outdoor swimming pool, including an in-ground, above-ground or on-ground pool, hot tub or spa shall be provided with a barrier which shall comply with the following:

1. The top of the barrier shall be at least 48 inches (1219 mm) above grade measured on the side of the barrier which faces away from the swimming pool. The maximum vertical clearance between grade and the bottom of the barrier shall be 2 inches (51 mm) measured on the side of the barrier which faces away from the swimming pool. Where the top of the pool structure is above grade, such as an above-ground pool, the barrier may be at ground level, such as the pool structure, or mounted on top of the pool structure. Where the barrier is mounted on top of the pool structure, the maximum vertical clearance between the top of the pool structure and the bottom of the barrier shall be 4 inches (102 mm).

2. Openings in the barrier shall not allow passage of a 4-inch-diameter (102 mm) sphere.

3. Solid barriers which do not have openings, such as a masonry or stone wall, shall not contain indentations or protrusions except for normal construction tolerances and tooled masonry joints.

4. Where the barrier is composed of horizontal and vertical members and the distance between the tops of the horizontal members is less than 45 inches (1143 mm), the horizontal members shall be located on the swimming pool side of the fence. Spacing between vertical members shall not exceed 1.75 inches (44 mm) in width. Where

there are decorative cutouts within vertical members, spacing within the cutouts shall not exceed 1.75 inches (44 mm) in width.

Exception: When the horizontal members are part of a fence that is at least 6 feet (1829 mm) in height, the horizontal members need not be on the pool side of the barrier.

5. Where the barrier is composed of horizontal and vertical members and the distance between the tops of the horizontal members is 45 inches (1143 mm) or more, spacing between vertical members shall not exceed 4 inches (102 mm). Where there are decorative cutouts within vertical members, spacing within the cutouts shall not exceed 1.75 inches (44 mm) in width.

6. Maximum mesh size for chain link fences shall be a 1.25-inch (32 mm) square unless the fence is provided with slats fastened at the top or the bottom which reduce the openings to not more than 1.75 inches (44 mm).

7. Where the barrier is composed of diagonal members, such as a lattice fence, the maximum opening formed by the diagonal members shall not be more than 1.75 inches (44 mm).

8. Access gates shall comply with the requirements of Section Q 106.2, Items 1 through 7, and shall be equipped to accommodate a locking device. Pedestrian access gates shall open outward away from the pool and shall be self-closing and have a self-latching device. Gates other than pedestrian access gates shall have a self-latching device. Where the release mechanism of the self-latching device is located less than 54 inches (1372 mm) from the bottom of the gate, the release mechanism and openings shall comply with the following:

   8.1. The release mechanism shall be located on the pool side of the gate at least 3 inches (76 mm) below the top of the gate, and

   8.2. The gate and barrier shall have no opening greater than 0.5 inch (12.7 mm) within 18 inches (457 mm) of the release mechanism.

   8.3. Driveway access gates across a paved or improved surface intended for regular vehicle access shall not be located in a swimming pool barrier.

9. Where a wall of a dwelling serves as part of the barrier one of the following conditions shall be met:

9.1. All doors with direct access to the pool through that wall shall be equipped with an alarm which produces an audible warning when the door and its screen, if present, are opened. The alarm shall sound continuously for a minimum of 30 seconds immediately after the door is opened and be capable of being heard throughout the house during normal household activities. The alarm shall automatically reset under all conditions. The alarm system shall be equipped with a manual means, such as touchpad or switch, to temporarily deactivate the alarm for a single opening. Such deactivation shall last for not more than 15 seconds. The deactivation switch(es) shall be located at least 54 inches (1372 mm) above the threshold of the door; or

9.2. Other means of protection, such as self-closing doors with self-latching devices, which are approved by the governing body, shall be acceptable so long as the degree of protection afforded is not less than the protection afforded by Item 9.1 described above.

10. Where an above-ground pool structure is used as a barrier or where the barrier is mounted on top of the pool structure and the means of access is a ladder or steps, then:

10.1. The ladder or steps shall be capable of being secured, locked or removed to prevent access, or

10.2. The ladder or steps shall be surrounded by a barrier which meets the requirements of Section Q 106.2, Items 1 through 9. When the ladder or steps are secured, locked or removed, any opening created shall not allow the passage of a 4-inch-diameter (102 mm) sphere.

Q 106.3 Indoor swimming pool. All walls surrounding an indoor swimming pool shall comply with Section Q 106.2, Item 9.

Q 106.4 Prohibited locations. Barriers shall be located so as to prohibit permanent structures, equipment or similar objects from being used to climb the barriers.

Q 106.5 Barrier exceptions. Spas or hot tubs with a safety cover which complies with ASTM F 1346, as listed in Section Q 108, shall be exempt from the provisions of this appendix.

SECTION Q 107
ENTRAPMENT PROTECTION FOR SWIMMING POOL AND SPA SUCTION OUTLETS

Q 107.1 General. Suction outlets shall be designed and installed in accordance with ANSI/APSP-7.

SECTION Q 108
ABBREVIATIONS

Q 108.1 General

ANSI-American National Standards Institute, 11 West 42nd Street, New York, NY 10036

ASTM-American Society for Testing and Materials, 1916 Race Street, Philadelphia, PA 19103

NSPI-National Spa and Pool Institute, 2111 Eisenhower Avenue, Alexandria, VA 22314

SECTION Q 109
STANDARDS

Q 109.1 General

ANSI/NSPI

ANSI/NSPI-3
Standard for Permanently Installed Residential Spas .....Q 105.1

ANSI/NSPI-4 Standard for Above-ground/On-ground Residential Swimming Pools. .....Q 104.2

ANSI/NSPI-5
Standard for Residential In-ground Swimming Pools. .....Q 104.1

ANSI/NSPI-6 Standard for Residential Portable Spas. .....Q 105.2

ASME/ANSI
112.19.8-2007 Suction Fittings for Use in Swimming Pools, Wading Pools, Spas, Hot Tubs and Whirlpool Bathing Appliances .....Q 107.1

ANSI/APSP-7-06
Standard for Suction Entrapment Avoidance in Swimming Pools, Wading Pools, Spas, Hot Tubs and Catch Basins .....Q 107.1

ASTM

ASTM F 1346-91 Standard Performance Specifications for Safety Covers and Labeling Requirements for All Covers for Swimming Pools, Spas and Hot Tubs. .....Q 105.2, Q 105.5

E. The amendment of the following I.E.C.C. provisions:

1. The amendment of Section 101.1, entitled **Title**, to read as follows:

   101.1 Title. This code shall be known as the International Energy Conservation Code of the City of Arlington, Texas, and shall be cited as such. It is referred to herein as "this code."

2. The amendment of Section 101.4, entitled **Applicability**, to read as follows:

   101.4.2 Historic buildings. Any building or structure that is listed in the State of National Register of Historic Places; designated as a historic property under local or state designation law or survey; certified as a contributing resource with a National Register listed or locally designated historic district; or with an opinion or certification that the property is eligible to be listed on the National or State Registers of Historic places either individually or as a contributing building to a historic district by the State Historic Preservation Officer or the Keeper of the National Register of Historic Places, shall comply with all of the provisions of this code.

   Exception: Whenever a provision or provisions shall invalidate or jeopardize the historical designation or listing, that provision or provisions may be exempted.

3. The amendment of Section 102.1, entitled **General**, to add a new Section 102.1.2 to read as follows:

   102.1.2 Alternative compliance. A building certified by a national, state, or local accredited energy efficiency program and determined by the Energy Systems Laboratory to be in compliance with the energy efficiency requirements of this section may, at the option of the Code Official, be considered in compliance. The United States Environmental Protection Agency's Energy Star Program certification of energy code equivalency shall be considered in compliance.

4. The amendment of Section 202, entitled **GENERAL DEFINITIONS**, to add the following definition:

PROJECTION FACTOR. The ratio of the horizontal depth of the overhang, eave or permanently attached shading device, divided by the distance measured vertically from the bottom of the fenestration glazing to the underside of the overhang, eave or permanently attached shading device.

5. The amendment of Section 402.2, entitled **Specific building thermal envelope insulation requirements (Prescriptive)**, to add a new Section 402.2.7 to read as follows:

   Section 402.2.7 Insulation installed in walls. To insure that insulation remains in place, insulation installed in walls shall be totally enclosed on all sides consisting of framing lumber, gypsum, sheathing, wood structural panel sheathing, netting or other equivalent material approved by the building official.

6. The amendment of Section 102.1, entitled **General**, to add a new Section 102.1.2 to read as follows:

   102.1.2 Alternative compliance. A building certified by a national, state, or local accredited energy efficiency program and determined by the Energy Systems Laboratory to be in compliance with the energy efficiency requirements of this section may, at the option of the Code Official, be considered in compliance. The United States Environmental Protection Agency's Energy Star Program certification of energy code equivalency shall be considered in compliance. Regardless of the program or the path to compliance, each 1- and 2-family dwelling shall be tested for air and duct leakage as prescribed in Section 402.4 and 403.3.3 respectively.

7. The amendment of Section 202, entitled **GENERAL DEFINITIONS**, to add the following definition:

   DYNAMIC GLAZING. Any fenestration product that has the fully reversible ability to change it performance properties, including *U*-factor, solar heat gain coefficient (SHGC), or visible transmittance (VT).

8. The amendment of Section 402.2, entitled **Specific insulation requirements (Prescriptive)**, to add a new Section 402.2.14 to read as follows:

   Section 402.2.14 Insulation installed in walls. To insure that insulation remains in place, insulation installed in walls shall be totally enclosed on all sides consisting of framing lumber, gypsum, sheathing, wood structural panel sheathing, netting or other equivalent material approved by the building official.

9. The amendment of Section 402.3.2, entitled **Glazed fenestration SHGC**, by adding a paragraph and table following the Exception to read as follows:

Where vertical fenestration is shaded by an overhang, eave, or permanently attached shading device, the SHGC required in Table 402.1.2 shall be reduced by using the multipliers in Table 402.3.2 SHGC Multipliers for Permanent Projections.

Table 402.3.2 SHGC Multipliers for Permanent Projections [a]

Projection Factor	SHGC Multiplier (all Other Orientation)	SHGC Multiplier (North Oriented)
0 - 0.10	1.00	1.00
>0.10 – 0.20	0.91	0.95
>0.20 – 0.30	0.82	0.91
>0.30 – 0.40	0.74	0.87
>0.40 – 0.50	0.67	0.84
>0.50 – 0.60	0.61	0.81
>0.60 – 0.70	0.56	0.78
>0.70 – 0.80	0.51	0.76
>0.80 – 0.90	0.47	0.75
>0.90 – 1.00	0.44	0.73

[a] North oriented means within 45 degrees of true north.

10. The amendment of Section 402.4.1.2, entitled **Testing**, to add a last paragraph to read as follows:

Mandatory testing shall only be performed by individuals that are certified to perform air infiltration testing certified by national or state organizations as approved by the building official. The certified individuals must be an independent third-party entity, and may not be employed, or have any financial interest in the company that constructs the structure.

11. The amendment of Section 403.3.3, entitled **Duct Testing (Mandatory)**, to add a last paragraph to read as follows:

Mandatory testing shall only be performed by individuals that are certified to perform duct testing leakage testing certified by national or state organizations as approved by the building official. The certified individuals must be an independent third-party entity, and may not be employed, or have any financial interest in the company that constructs the structure.

12. The amendment of Section 405.6.2, entitled **Specific approval,** to add the following sentence to the end of paragraph:

Acceptable performance software simulation tools may include, but are not limited to, REM Rate™, Energy Gauge and IC3. Other performance software programs accredited by RESNET BESTEST and having the ability to provide a report as outlined in 405.4.2 may also be deemed acceptable performance simulation programs and may be considered by the building official.

13. The amendment of TABLE 406.4, entitled **MAXIMUM ENERGY RATING INDEX**, to read as follows:

TABLE 406.4[1]
MAXIMUM ENERGY RATING INDEX

CLIMATE ZONE	ENERGY RATING INDEX
3	65

[1] This table is effective until August 31, 2019.

TABLE 406.4[2]
MAXIMUM ENERGY RATING INDEX

CLIMATE ZONE	ENERGY RATING INDEX
3	63

[2] The table is effective from September 1, 2019 to August 31, 2022.

TABLE 406.4[3]
MAXIMUM ENERGY RATING INDEX

CLIMATE ZONE	ENERGY RATING INDEX
3	59

[3] This table is effective on or after September 1, 2022

F. The amendment of the following I.E.B.C. provisions:

1. The amendment of Section 101.1, entitled **Title**, to read as follows:

101.1 Title. This code shall be known as the International Existing Building Code of the City of Arlington, Texas, and shall be cited as such. It is referred to herein as "this code."

2. The amendment of Section 101.4.2, **Historic buildings**, to read as follows:

101.4.2 Historic buildings. Any building or structure that is listed in the State of National Register of Historic Places; designated as a historic

property under local or state designation law or survey; certified as a contributing resource with a National Register listed or locally designated historic district; or with an opinion or certification that the property is eligible to be listed on the National or State Registers of Historic places either individually or as a contributing building to a historic district by the State Historic Preservation Officer or the Keeper of the National Register of Historic Places, shall comply with all of the provisions of this code.

Exception: Whenever a provision or provisions shall invalidate or jeopardize the historical designation or listing, that provision or provisions may be exempted.

3. The amendment of Section 102.4, entitled **Referenced codes and standards,** to read as follows:

102.4 Referenced codes and standards. The codes, when specifically adopted, and standards referenced in this code shall be considered part of the requirements of this code to the prescribed extent of each such reference and as further regulated in Sections 102.4.1 and 102.4.2.

4. The amendment of Section 202, entitled **GENERAL DEFINITIONS**, to amend the definition of **EXISTING BUILDING** as follows:

EXISTING BUILDING. A building, structure, or space, with an approved final inspection issued under a code edition which is at least 2 published code editions preceding the currently adopted building code; or a change of occupancy.

5. The amendment of Section 405.1.2, entitled **Existing fire escapes**, to read as follows:

405.1.2 Existing fire escapes. Existing fire escapes shall continue to be accepted as a component in the means of egress in existing buildings only. Existing fire escapes shall be permitted to be repaired or replaced.

6. The deletion of Section 405.1.3, entitled **New fire escapes**, in its entirety.

7. The amendment of Section 406.2, entitled **Replacement window opening control devices**, by amending the paragraph following Items 1-5 to read as follows:

The window opening control device, after operation to release the control device allowing the window to fully open, shall not reduce the minimum net clear opening area of the window unit to less than the area required by Section 1030.2 of the International Building Code.

8. The amendment of Section 406.3, entitled **Replacement window emergency escape and rescue openings**, by amending the first paragraph to read as follows:

406.2 Replacement window emergency escape and rescue openings. Where windows are required to provide emergency escape and rescue openings in Group R-2 and R-3 occupancies, replacement windows shall be exempt from the requirements of Sections 1030.2, 1030.3 and 1030.5 of the International Building Code provided the replacement window meets the following conditions:

{Remainder unchanged}

9. The amendment of Section 408.3, entitled **Flood hazard areas,** to read as follows:

408.3 Flood hazard areas. To establish flood hazard areas, the applicable governing authority shall adopt a flood hazard map and supporting data. The flood hazard map shall include, at a minimum, areas of special flood hazard as identified by the Federal Emergency Management Agency in an engineering report entitled "The Flood Insurance Study for Tarrant County, Texas, dated September 25, 2009, as amended or revised with the accompanying Flood Insurance Rate Map (FIRM) and Flood Boundary and Floodway Map (FBFM) and related supporting data along with any revisions thereto. The adopted flood hazard map and supporting data are hereby adopted by reference and declared to be part of this section.

10. The amendment of Section 409.1, entitled **Conformance**, to add an exception to read as follows:

> Exception: Moved historic buildings need not be brought into compliance with the exception of new construction features required as the result of such movement, including but not limited to foundations and/or other structural elements.

11. The amendment of Section 410.1, entitled **Scope**, to add an Exception to read as follows:

> Exception: Components of projects regulated by and registered with Architectural Barriers Division of Texas Department of Licensing and Regulation shall be deemed to be incompliance with the requirements of this chapter.

12. The amendment of Section 410.4.2, entitled **Complete change of occupancy**, to add Number 7 to the list of requirements as follows:

7. At least one accessible family or assisted use toilet room shall be provided in accordance with Chapter 11 of the International Building Code.

13. The amendment of Section 601.3, entitled **Flood hazard areas**, to read as follows:

601.3 Flood hazard areas. To establish flood hazard areas, the applicable governing authority shall adopt a flood hazard map and supporting data. The flood hazard map shall include, at a minimum, areas of special flood hazard as identified by the Federal Emergency Management Agency in an engineering report entitled "The Flood Insurance Study for Tarrant County, Texas, dated September 25, 2009, as amended or revised with the accompanying Flood Insurance Rate Map (FIRM) and Flood Boundary and Floodway Map (FBFM) and related supporting data along with any revisions thereto. The adopted flood hazard map and supporting data are hereby adopted by reference and declared to be part of this section.

14. The amendment of Section 602.3, entitled **Glazing in hazardous locations**, to read as follows:

602.3 Glazing in hazardous locations. Replacement glazing in hazardous locations shall comply with the safety glazing requirements of the *International Building Code, International Energy Conservation Code,* or *International Residential Code* as applicable.

15. The amendment of Section 606.2.4, entitled **Flood hazard areas**, to read as follows:

606.2.4 Flood hazard areas. To establish flood hazard areas, the applicable governing authority shall adopt a flood hazard map and supporting data. The flood hazard map shall include, at a minimum, areas of special flood hazard as identified by the Federal Emergency Management Agency in an engineering report entitled "The Flood Insurance Study for Tarrant County, Texas, dated September 25, 2009, as amended or revised with the accompanying Flood Insurance Rate Map (FIRM) and Flood Boundary and Floodway Map (FBFM) and related supporting data along with any revisions thereto. The adopted flood hazard map and supporting data are hereby adopted by reference and declared to be part of this section.

16. The amendment of Section 607.1, entitled **Material**, to read as follows:

607.1 Material. Existing electrical wiring and equipment undergoing *repair* shall be allowed to be repaired or replaced with like material, in accordance with the requirements of NFPA 70.

17. The amendment of Section 701.3, entitled **Flood hazard areas**, to read as follows:

701.3 Flood Hazard areas. To establish flood hazard areas, the applicable governing authority shall adopt a flood hazard map and supporting data. The flood hazard map shall include, at a minimum, areas of special flood hazard as identified by the Federal Emergency Management Agency in an engineering report entitled "The Flood Insurance Study for Tarrant County, Texas, dated September 25, 2009, as amended or revised with the accompanying Flood Insurance Rate Map (FIRM) and Flood Boundary and Floodway Map (FBFM) and related supporting data along with any revisions thereto. The adopted flood hazard map and supporting data are hereby adopted by reference and declared to be part of this section.

18. The amendment of Section 702.6, entitled **Materials and methods**, to read as follows:

702.6 Materials and methods. All new work shall comply with the materials and methods requirements in the *International Building Code*, *International Energy Conservation Code*, *International Mechanical Code*, *National Electrical Code*, and *International Plumbing Code*, as applicable, that specify material standards, detail of installation and connection, joints, penetrations, and continuity of any element, component, or system in the building.

19. The amendment of Section 802.1, entitled **General**, to read as follows:

802.1 General. Alteration of buildings classified as special use and occupancy as described in Chapter 4 of the *International Building Code* shall comply with the requirements of Section 801.1 and the scoping provisions of Chapter 1, where applicable.

20. The amendment of Section 803.5.1, entitled **Minimum requirement**, to read as follows:

803.5.1 Minimum requirement. Every portion of open-sided walking surfaces, including mezzanines, equipment platforms, aisles, stairs, ramps and landings that are not provided with guards, or those in which the existing guards are judged to be in danger of collapsing, shall be provided with guards.

21. The amendment of Section 804.1, entitled **Scope**, to add a sentence to read as follows:

For the purpose of fire sprinkler protection and fire alarm requirements included in this section, the work area shall be extended to include at least

the entire tenant space or spaces bounded by walls capable of resisting the passage of smoke containing the subject work area, and if the work area includes a corridor, hallway, or other exit access, then such corridor, hallway, or other exit access shall be protected in its entirety on that particular floor level.

22. The amendment of Section 804.2.2, entitled **Groups A, B, E, F-1, H, I, M, R-1, R-2, R-4, S-1, and S-2**, to change the Exception under Item 2 to read as follows:

> Exception: Where the building does not have sufficient municipal water supply for design of a fire sprinkler system available to the floor without installation of a new fire pump, fire sprinkler protection shall not be required.

23. The amendment of Section 804.2.5, entitled **Supervision**, to change the Exception to read as follows:

> Exception: Supervision is not required where the Fire Code does not require such for new construction.

24. The amendment of Section 804.3, entitled **Standpipes**, to read as follows:

804.3 Standpipes. Refer to Section 1103.6 of the Fire Code for retroactive standpipe requirements.

{The remainder of Section 804.3 is deleted in its entirety.}

25. The amendment of Section 805.2, entitled **General**, by deleting Exception 1.

26. The amendment of Section 805.3.1.1, entitled **Single-exit buildings**, by deleting Item 4.

27. The amendment of Section 805.3.1.2, entitled **Fire escapes required**, to read as follows:

805.3.1.2 Fire Escapes required. For other than Group I-2, where more than one exit is required, an existing fire escape complying with section 805.3.1.2.1 shall be accepted as providing one of the required means of egress.

28. The amendment of Section 805.3.1.2.1, entitled **Fire escape access and details**, by deleting the word "new" from Item 2, deleting Item 3 in its entirety, and amending Item 5 to read as follows:

5. In all buildings of Group E occupancy up to and including the 12th grade, buildings of Group I occupancy, boarding houses, and childcare centers, ladders of any type are prohibited on fire escapes used as a required means of egress.

29. The deletion of Section 805.3.1.2.2, entitled **Construction,** in its entirety.

30. The deletion of Section 805.3.1.2.3, entitled **Dimensions**, in its entirety.

31. The amendment of Section 806.2, entitled **Stairways and escalators in existing buildings,** to add an exception to read as follows:

    Exception: Components of projects regulated by and registered with Architectural Barriers Division of Texas Department of Licensing and Regulation shall be deemed to be incompliance with the requirements of this chapter.

32. The amendment of Section 904.1, entitled **Automatic sprinkler systems**, to add a sentence to read as follows:

    For the purpose of fire sprinkler protection and fire alarm requirements included in this section, the work area shall be extended to include at least the entire tenant space or spaces bounded by walls containing the subject work area, and if the work area includes a corridor, hallway, or other exit access, then such corridor, hallway, or other exit access shall be protected in its entirety on that particular floor level.

33. The amendment of Section 904.1.1, entitled **High-rise buildings**, to read as follows:

    904.1.1 High-rise buildings. An automatic sprinkler system shall be provided in work areas of where the high-rise buildings.

34. The amendment of Section 1103.5, entitled **Flood hazard areas,** to read as follows:

    1103.5 Flood hazard areas. To establish flood hazard areas, the applicable governing authority shall adopt a flood hazard map and supporting data. The flood hazard map shall include, at a minimum, areas of special flood hazard as identified by the Federal Emergency Management Agency in an engineering report entitled "The Flood Insurance Study for Tarrant County, Texas, dated September 25, 2009, as amended or revised with the accompanying Flood Insurance Rate Map (FIRM) and Flood Boundary and Floodway Map (FBFM) and related supporting data along with any

revisions thereto. The adopted flood hazard map and supporting data are hereby adopted by reference and declared to be part of this section.

35. The amendment of Section 1201.4, entitled **Flood hazard areas,** to read as follows:

1201.4 Flood hazard areas. To establish flood hazard areas, the applicable governing authority shall adopt a flood hazard map and supporting data. The flood hazard map shall include, at a minimum, areas of special flood hazard as identified by the Federal Emergency Management Agency in an engineering report entitled "The Flood Insurance Study for Tarrant County, Texas, dated September 25, 2009, as amended or revised with the accompanying Flood Insurance Rate Map (FIRM) and Flood Boundary and Floodway Map (FBFM) and related supporting data along with any revisions thereto. The adopted flood hazard map and supporting data are hereby adopted by reference and declared to be part of this section.

36. The amendment of Section 1302.7, entitled **Flood hazard areas**, to read as follows:

1307.2 Flood hazard areas. To establish flood hazard areas, the applicable governing authority shall adopt a flood hazard map and supporting data. The flood hazard map shall include, at a minimum, areas of special flood hazard as identified by the Federal Emergency Management Agency in an engineering report entitled "The Flood Insurance Study for Tarrant County, Texas, dated September 25, 2009, as amended or revised with the accompanying Flood Insurance Rate Map (FIRM) and Flood Boundary and Floodway Map (FBFM) and related supporting data along with any revisions thereto. The adopted flood hazard map and supporting data are hereby adopted by reference and declared to be part of this section.

37. The amendment of Section 1401.2, entitled **Applicability**, by amending the first sentence thereof to read as follows:

1401.2 Applicability. Structures existing prior to the date of an approved final inspection issued under a code edition which is at least two published code editions preceding the currently adopted building code; or a change of occupancy shall be made to conform to the requirements of this chapter or the provisions of Chapters 5 through 13.

38. The amendment of Section 1401.3.2, entitled **Compliance with other codes,** to read as follows:

1401.3.2 Compliance with other codes. Buildings that are evaluated in accordance with this section shall comply with the *International Fire Code*.

39. The amendment of Chapter 16, entitled **REFERENCED STANDARDS**, to change IECC-15 to read as follows:

IECC Edition as adopted by the State of Texas
International Energy Conservation Code®. .301.2, 702.6, 708.1, 811.1, 908.1

Section 1.05 <u>Adoption of Appendices</u>

The following referenced provisions of the I.B.C., I.R.C., I.E.B.C. and I.E.C.C. annexed hereto as appendices, the same being either attached hereto or incorporated herein by reference, are made a part of this Building Code:

<u>Appendix A</u>. Only Appendix C, entitled GROUP U-AGRICULTURAL BUILDINGS, of the Appendix to the International Building Code, 2015 Edition.

All other Chapters of said Appendix to the I.B.C. are hereby omitted from this Building Code.

<u>Appendix B</u>. Only Appendix H, entitled PATIO COVERS, of the Appendix to the International Residential Code, 2015 Edition.

All other Appendices to the I.R.C., not specifically referenced or quoted herein are hereby omitted from this Building Code.

Further, **Article I, Section 1.08, Subsection (C)**, is hereby repealed.

Further, **Article IV, Section 4.02,** <u>Commercial Site Plan and Permits Required</u>, **Subsection (A)**, is hereby amended so that said Subsection shall be and read as follows:

A. It shall be unlawful for any Registrant or person without first obtaining a separate building permit for such work from the Building Official:

1. to erect, construct, enlarge, alter, repair, move, improve, remove, convert or demolish any building or structure;

   EXEMPTION: see exemptions in Subsections (B) and (C) below.

2. to install, enlarge or repair any fence;

   EXEMPTION: Repair or replacement of fencing where not less than 50% of one side of the fence is being repaired and/or replaced.

3. to erect, alter a sign, including the copy face or lettering of any sign, either by changing the message or by renovating an existing message, or erect any sign or sign structure;

   EXEMPTION: Changing a changeable copy message or a message center sign message; general maintenance such as repainting the same message or changing the face of a sign permitted as an off-site advertising sign;

4. to reroof any building or structure;

5. to excavate, grade, or fill property, or cause the same to be done;

   EXEMPTION: Excavation for construction of a structure permitted under this code; Refuse disposal sites controlled by other regulations; Excavations for wells, or trenches for utilities; Mining, quarrying, excavating, processing or stockpiling rock, sand, gravel, aggregate or clay controlled by other regulations, provided such operations do not affect the lateral support of, or significantly increase stresses in, soil on adjoining properties; or, Exploratory excavations performed under the direction of a registered design professional.

Separate permits are required for electrical, plumbing and mechanical work as set forth in the Electrical, Mechanical and Plumbing Chapters of this Code.

Further, **Article IV, Section 4.02,** Commercial Site Plan and Permits Required, is hereby amended with the addition of Subsection (H) so that said Subsection shall be and read as follows:

H. Work Performed without Required Permits.

1. This subsection applies to a person who owns, occupies, or exercises control over a building or premises where work described by Subsection (A) is performed that requires a building permit, electrical permit, mechanical permit, or electrical permit.

2. A person who performs work described by Subsection (A) or who allows such work to be performed at a building or premises has a duty to obtain all required permits from the Building Official prior to such work being performed. If work described by Subsection (A) is performed without first obtaining a required permit from the Building Official, a person has a continuing duty to obtain any required permit for the work that was performed.

3. When work described by Subsection (A) is performed at a building or premises without first obtaining any required permit from the Building Official, it shall be unlawful for a person to own, occupy, keep, maintain, or exercise control over the building or premises until any required permit is obtained for the work that was performed. Each day that the person owns, occupies, keeps, maintains, or exercises control over the building or premises where such work was performed without having obtained any required permit shall constitute a separate offense.

Further, **Article IV, Section 4.14**, Certificate of Occupancy, **Subsection (B)**, Change in Use, is hereby amended so that said Subsection shall be and read as follows:

B. Change in use. Changes in the character of occupancy or use of a building shall not be made, except as specified in I.E.B.C.

2.

Any person, firm, corporation, agent or employee thereof who violates any of the provisions of this ordinance shall be guilty of a misdemeanor and upon conviction thereof shall be fined an amount not to exceed Two Thousand Dollars and No Cents ($2,000.00) for each offense. Each day that a violation is permitted to exist shall constitute a separate offense.

3.

This ordinance shall be and is hereby declared to be cumulative of all other ordinances of the City of Arlington; and this ordinance shall not operate to repeal or affect any of such other ordinances except insofar as the provisions thereof might be inconsistent or in conflict with the provisions of this ordinance, in which event such conflicting provisions, if any, in such other ordinance or ordinances are hereby repealed.

4.

If any section, subsection, sentence, clause or phrase of this ordinance is for any reason held to be unconstitutional, such holding shall not affect the validity of the remaining portions of this ordinance.

5.

All of the regulations provided in this ordinance are hereby declared to be governmental and for the health, safety and welfare of the general public. Any member of the City Council or any City official or employee charged with the enforcement of this ordinance, acting for the City of Arlington in the discharge of his/her duties, shall not thereby render himself/herself personally liable; and he/she is hereby relieved from all

personal liability for any damage that might accrue to persons or property as a result of any act required or permitted in the discharge of his/her said duties.

6.

Any violation of this ordinance can be enjoined by a suit filed in the name of the City of Arlington in a court of competent jurisdiction, and this remedy shall be in addition to any penal provision in this ordinance or in the Code of the City of Arlington.

7.

The caption and penalty clause of this ordinance shall be published in a newspaper of general circulation in the City of Arlington, Texas, in compliance with the provisions of Article VII, Section 15, of the City Charter. Further, this ordinance may be published in pamphlet form and shall be admissible in such form in any court, as provided by law.

8.

This ordinance shall become effective thirty days after adoption.

PRESENTED AND GIVEN FIRST READING on the 20th day of March, 2018, at a regular meeting of the City Council of the City of Arlington, Texas; and GIVEN SECOND READING, passed and approved on the 10th day of April, 2018, by a vote of 9 ayes and 0 nays at a regular meeting of the City Council of the City of Arlington, Texas.

W. JEFF WILLIAMS, Mayor

ATTEST:

MARY W. SUPINO, City Secretary

APPROVED AS TO FORM:
TERIS SOLIS, City Attorney

BY