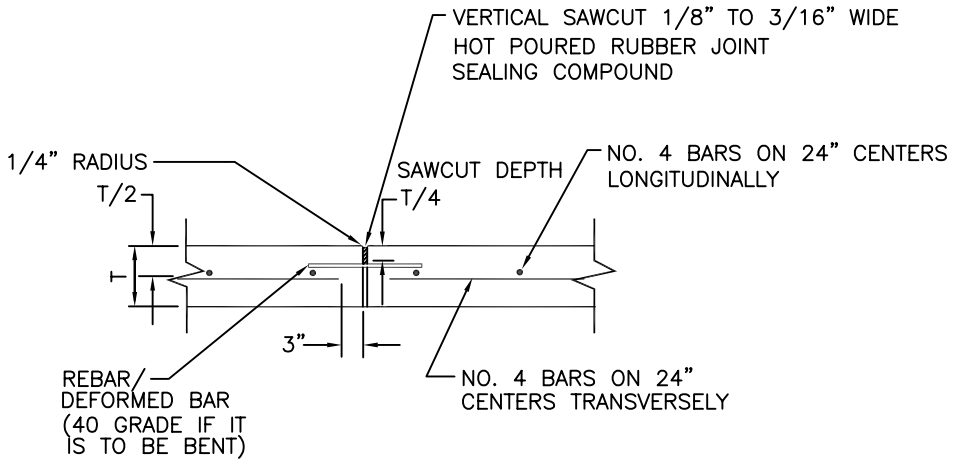

TIE BAR SIZE	LENGTH	SPACING
# 4	30"	18"

LONGITUDINAL CONSTRUCTION JOINT

NTS

REVISIONS	
REVISIONS	Revised 11/16/99 (Bar Sizes)

CITY OF ARLINGTON,TEXAS

PROJECT NUMBER
PROJECT NAME
(PROJECT LIMITS)

DATE:	SCALE:	SHEET____OF____
DESIGNED BY:	DRAWN BY:	CHECKED BY:

C:\Documents and Settings\kaufmanp\Desktop\Longitudinal_Contraction_Joint.dwg, 03/09/2004 10:07:52 AM